LGP-10 Leg Press 45 Degree

OWNER'S MANUAL

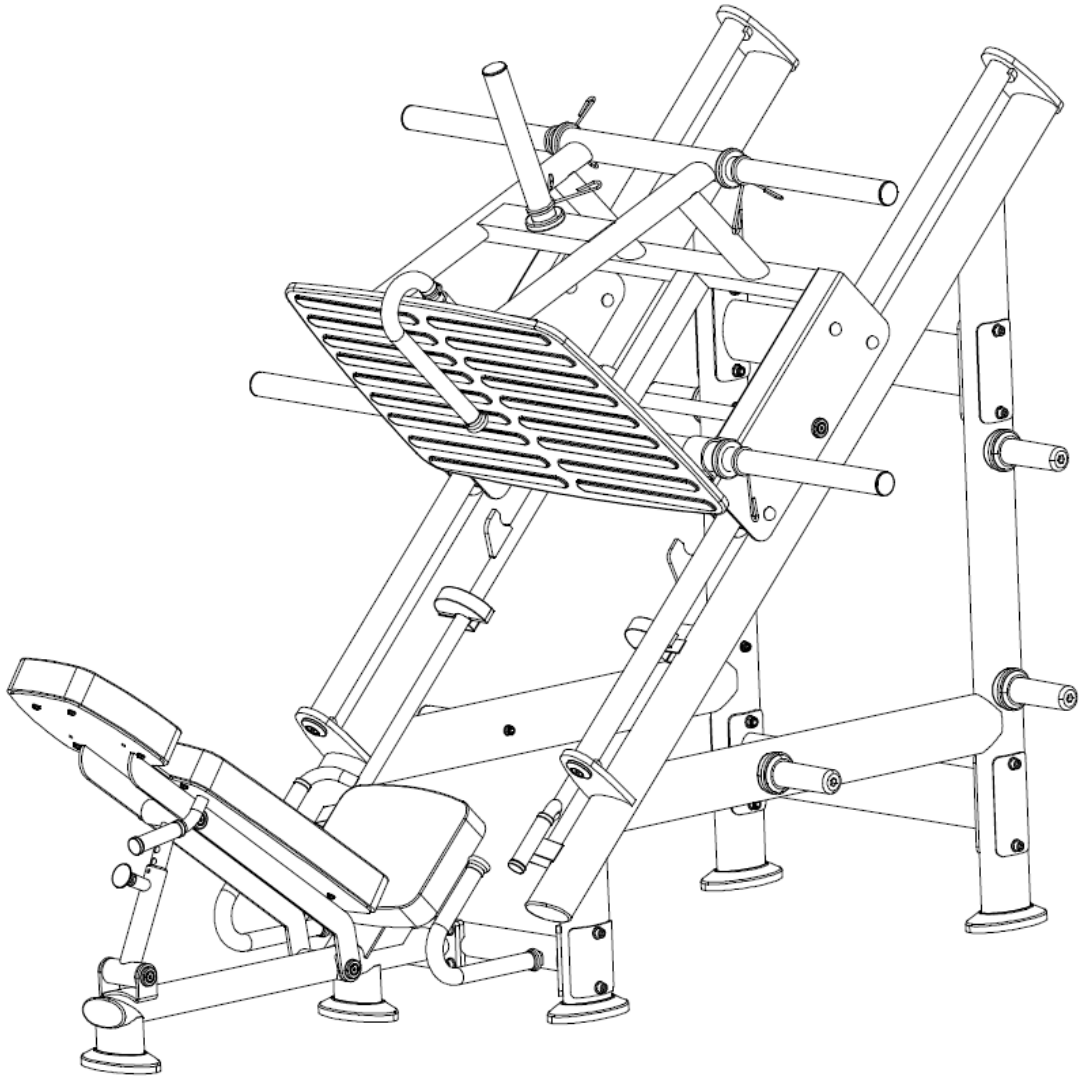

IMPORTANT!

Please read all instructions carefully before using this product.
Retain this manual for future reference.
The specifications of this product may vary slightly from the illustrations and are subject to change without notice.

WARNING, Safety & Maintenance

Be sure that all users carefully read and understand all warning, safety and maintenance info on this Owner's Manual or labels on the machine before each use. Failure to do so may result in death or serious injury.

It is imperative that you retain this Owner's Manual and be sure all warning labels are legible and intact.

If you have any questions about the operation, set up or maintenance of this machine please contact the local distributors or sales agents.

THERE IS A RISK ASSUMED BY INDIVIDUALS WHO USE THIS TYPE OF EQUIPMENT.
TO MINIMIZE RISK, YOU MUST FOLLOW THESE RULES:

1. Inspect equipment before each workout. Check that all nuts, bolts, screws and pop pins are in place and fully tightened. Also, before use, check cables for signs of wear. Replace all worn parts immediately. Never use machine if any parts are damaged or missing.
FAILURE TO FOLLOW THESE RULES MAY RESULT IN SERIOUS INJURY.

2. Keep clear of the cables and all moving parts when the machine is in use.
3. Always make sure all Snap Links are closed when doing any cable/pulley/strap exercises.

4. Exercise with care. Perform your exercises at a smooth moderate pace; never perform jerky or uncoordinated movements that may cause injury.

5. It is recommended that you should workout with a training partner.
6. Do not allow children or minors to play on or around this equipment.
7. If unsure of proper use of equipment, call your local distributor or agent.
8. WARNING: Consult your physician before starting your exercise program. For your own safety, do not begin any exercise program without proper instruction.

MAINTENANCE SCHEDULE Check the function and integrity of the following components. As noted, inspect equipment before each workout. Replace all damaged, broken or worn components immediately.		DAILY	WEEKLY
Cables:	Check tension, end fittings, and coating	√	
	Check that locking nut at weight stack is tight		√
Upholstery:	Wipe down and dry	√	
	Clean and condition		√
Frame:	Wipe down and dry	√	
	Polish / Wax		√
Chrome:	Wipe down and dry	√	
	Polish / Lubricate		√
Nuts/ Bolts/ Fasteners: Tighten and/ or adjust as needed			√
Guide Rods:	Lubricate and clean		√
Linear Rods:	Lubricate and clean		√
Seat Sleeves:	Lubricate and clean		√
Adjustments/ Locking Pins/ Tightening Knobs			√
Weight Stack Pins			√
Warning Instruction Labels			√
Springs/ Pop Pins		√	
Anti Skid Surfaces			√
Hand Grips/ Rollers			√

WARNING Safety and Maintenance of Cables

IMPORTANT: Cables are wear items. It is your responsibility to prevent unexpected breakage.
Cable inspection should be performed daily. Inspect all cables, the nylon coating on all cables, and the area near the fitting at each end of each cable.

Replace any damaged or worn cable immediately. Do not allow the machine to be used until damaged or worn cables are replaced. Using or allowing a machine to be used with a suspect cable can result in serious injury. See Owner’s Manual for more information.

Important Safety Instructions

Before beginning any fitness program, you should obtain a complete physical examination from your physician.

WHEN USING EXERCISE EQUIPMENT, YOU SHOULD ALWAYS TAKE BASIC PRECAUTIONS, INCLUDING THE FOLLOWING:

- Read all instructions before using the equipment. These instructions are written to ensure your safety and to protect the unit.
- Do not remove any safety labels from the machine. **MAX. USER WEIGHT: 180Kgs**
- Do not allow children on or near the equipment.
- Use the equipment only for its intended purpose as described in this guide. Do not use accessory attachments that are not recommended by the manufacturer. Such attachments might cause injuries.
- Wear proper exercise clothing and shoes for your workout, no loose clothing.
- Keep hands, limbs, loose clothing, and long hair well out of the way of all moving parts.
- Use care when getting on or off the unit.
- Do not overexert yourself or work to exhaustion.
- If you feel any pain or abnormal symptoms, stop your workout immediately and consult your physician.
- Never operate unit when it has been dropped or damaged. Return the equipment to a service center for examination and repair.
- Never drop or insert objects into any opening in the equipment.
- Always check the unit and its cables before each use. Make sure that all fasteners and cables are secure and in good working condition.
- Do not use the equipment outdoors or near water.

Personal Safety During Assembly

- Before beginning assembly, please take the time to read the instructions thoroughly.
- Read each step in the assembly instructions and follow the steps in sequence. Do not skip ahead. If you skip ahead, you may learn later that you have to disassemble components and that you may have damaged the equipment.
- Assemble and operate the equipment on a solid, level surface. Locate the unit a few feet from the walls or furniture to provide easy access.
- The machine is designed for your enjoyment. By following these precautions and using common sense, you will have many safe and pleasurable hours of healthful exercise with your equipment.
- After assembly, you should check all functions to ensure correct operation. If you experience problems,

first recheck the assembly instructions to locate any possible errors made during assembly. If you are unable to correct the problem, call the dealer from whom you purchased the machine or call the dealer nearest you.

Obtaining Service

- Please use this Owner’s Manual to make sure that all parts have been included in your shipment.
- Retain this Owner’s Manual for future reference.

PREPARATION

Thank you for purchasing this equipment. This machine is part of our line of quality strength training machines, which lets you target specific muscle groups to achieve better muscle tone and overall body conditioning. To maximize your use of the equipment please study this Owner’s Manual thoroughly.

INSTALLATION Requirements

Follow these installation requirements when assembling:

Set up the machine on a solid, flat surface. A smooth, flat surface under the machine helps keep it level. A level machine has fewer malfunctions.

Provide ample space around the machine. Open space around the machine allows for easier access.

Insert all bolts in the same direction. For aesthetic purposes, insert all bolts in the same direction unless specified (in text or illustrations) to do otherwise.

Leave room for adjustments. Tighten fasteners such as bolts, nuts, and screws so the unit is stable, but leave room for adjustments. Do not fully tighten fasteners until instructed in the assembly steps to do so.

ASSEMBLY Tips

Read all “Notes” on each page before beginning each step.

While you may be able to assemble the machine using the illustrations only, important safety notes and other tips are included in the text.

Some pieces may have extra holes that you will not use. Use only those holes indicated in the instructions and illustrations.

NOTE: With so many assembled parts, proper alignment and adjustment is critical. While tightening the nuts and bolts, be sure to leave room for adjustments.

NOTE: The bottles that are marked “Poison” is your touch up paint. Keep away from children.

CAUTION: Obtain assistance! If you feel like you can’t assemble the machine by yourself then do not attempt to do so as this could result in injury. Review the installation requirements before proceeding with the following steps.

Exploded Drawing

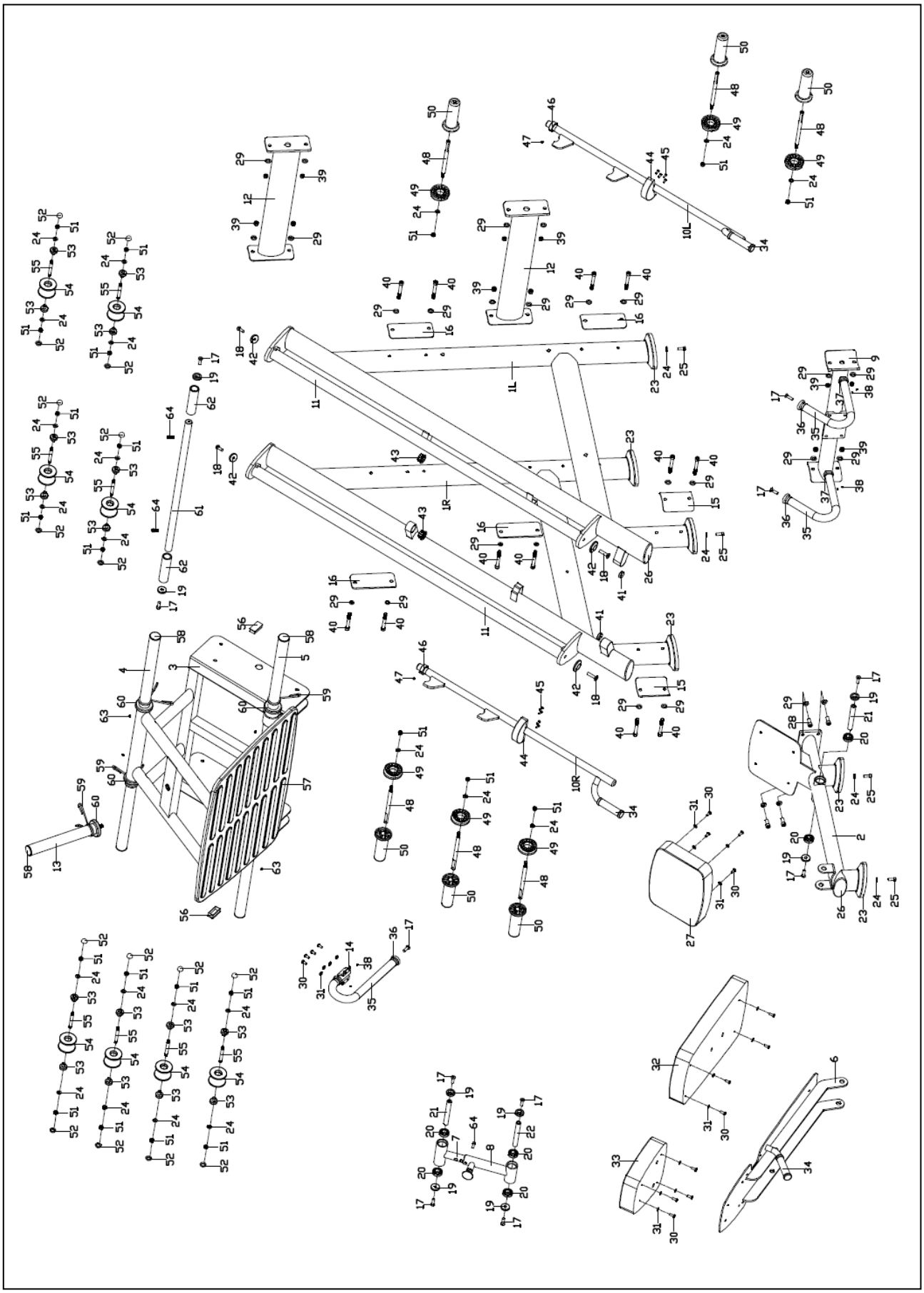

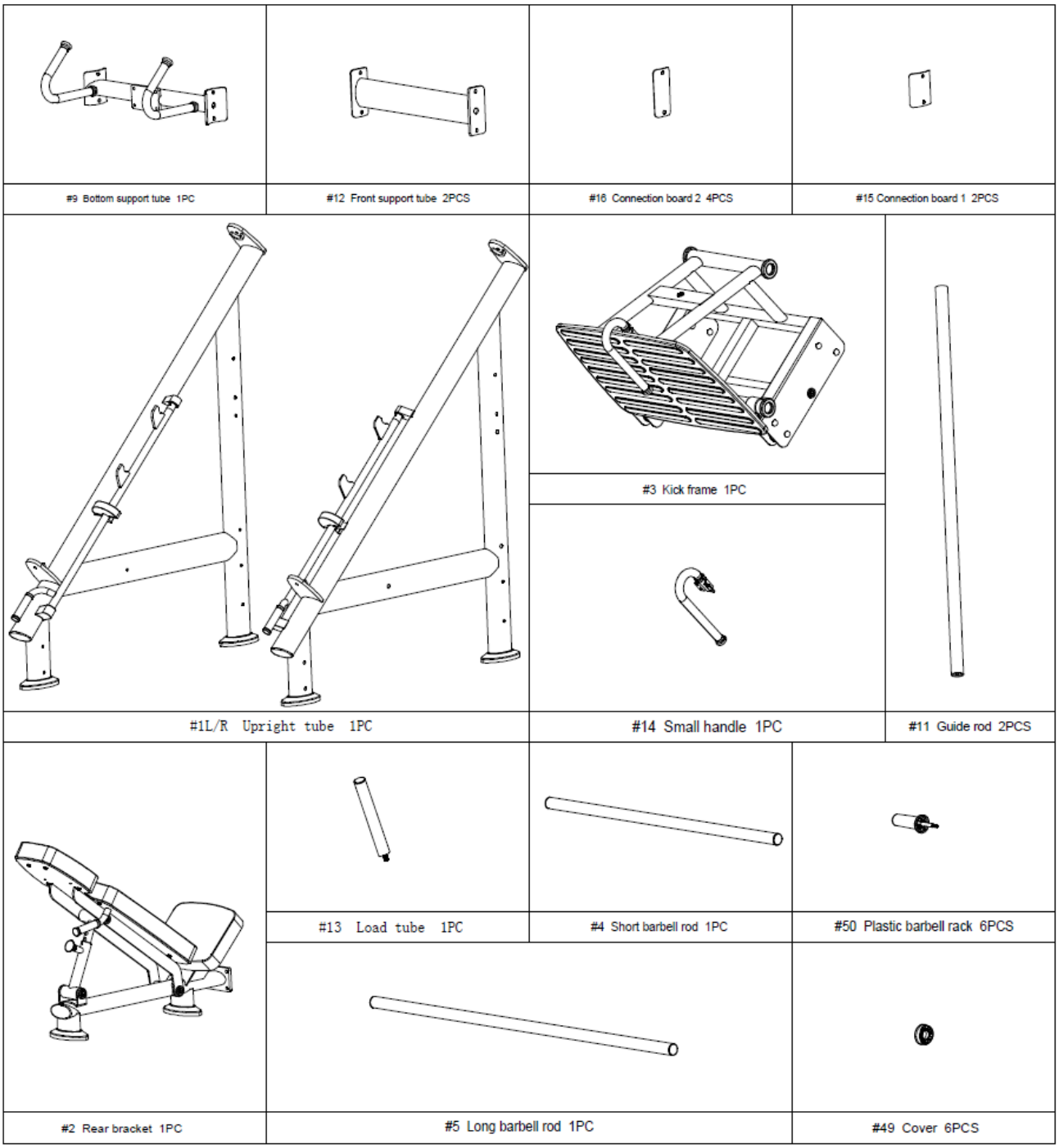
#9 Bottom support tube 1PC
#12 Front support tube 2PCS
#16 Connection board 2 4PCS
#15 Connection board 1 2PCS
#1L/R Upright tube 1PC
#3 Kick frame 1PC
#14 Small handle 1PC
#11 Guide rod 2PCS
#13 Load tube 1PC
#4 Short barbell rod 1PC
#50 Plastic barbell rack 6PCS
#2 Rear bracket 1PC
#5 Long barbell rod 1PC
#49 Cover 6PCS

Parts list

NO.	DESCRIPTION	QTY	NO.	DESCRIPTION	QTY
1L/R	Upright tube	1pr.	33	Headrest	1
2	Rear bracket	1	34	Grip cover	3
3	Kick frame	1	35	Foam grip	3
4	Short barbell rod	1	36	Aluminum end cap	3
5	Long barbell rod	1	37	Aluminum spacer	3
6	Backrest board	1	38	Hexagon flat-tight bolts M5X5	9
7	Backrest support tube	1	39	Nylon nut M12	12
8	Backrest adjust tube	1	40	Hex screw M12X90	12
9	Bottom support tube	1	41	Rubber washer 1	2
10L/R	Limit lever	1pr.	42	Aluminum end cap 2	4
11	Guide rod	2	43	IGUS bushing	2
12	Front support tube	2	44	Rubber washer 2	4
13	Load tube	1	45	Phillips screws M6X15	8
14	Small handle	1	46	Aluminum ring	2
15	Connection board 1	2	47	Hexagon flat-tight bolts M8X10	2
16	Connection board 2	4	48	Single head stud	6
17	Hex bolt M10X30	11	49	Cover	6
18	Hex bolt M12X40	4	50	Plastic barbell rack	6
19	Aluminum end cap 1	6	51	Nylon nut M10	22
20	Bearing 6004	6	52	Ball cap	16
21	Long shaft axle	2	53	Bearing 6201	16
22	Short shaft axle	1	54	Wheel	8
23	Elliptical end cap	6	55	Wheel axle	8
24	Flat washer D20XD10X2	28	56	Square end cap	2
25	Hex screw M10X16	6	57	Pedal pad	1
26	End cap	3	58	Round end cap	5
27	Seat	1	59	Spring clip	5
28	Hex screw M12X30	4	60	Cushion	5
29	Flat washer D24XD13X2.5	28	61	Limit axle	1
30	Allen screw M8X20	16	62	Buffer sleeve	2
31	Flat washer D16XD8X1.5	16	63	Hexagon flat-tight bolts M8X8	4
32	Backrest	1	64	Hex screw M6X12	3

NOTE:

Most of the listed hardware has been packaged separately, but some of them have been preinstalled in the identified assembly parts. In these instances, simply remove and reinstall the hardware as assembly is required.
Please refer the individual steps for the installation and pay attention to the preinstalled hardware.

ASSEMBLY INSTRUCTION

NOTE: It is well suggested that two or more people to assemble this machine to avoid any possible injury.

Remove all the security tape and wrapping before the installation.

Step 1

1. Install the Bottom support tube (9) to the Upright tube (1L/R) with Hex screw (40), Flat washer (29), Connection board 1 (15), Nylon nut (39).
2. Install the Front support tube (12) to the Upright tube (1L/R) with Hex screw (40), Flat washer (29), Connection board 2 (16), Nylon nut (39).
3. Install the Rear bracket (2) to the Bottom support tube (9) with Hex screw (28), Flat washer (29).
4. Tighten all the bolts above.

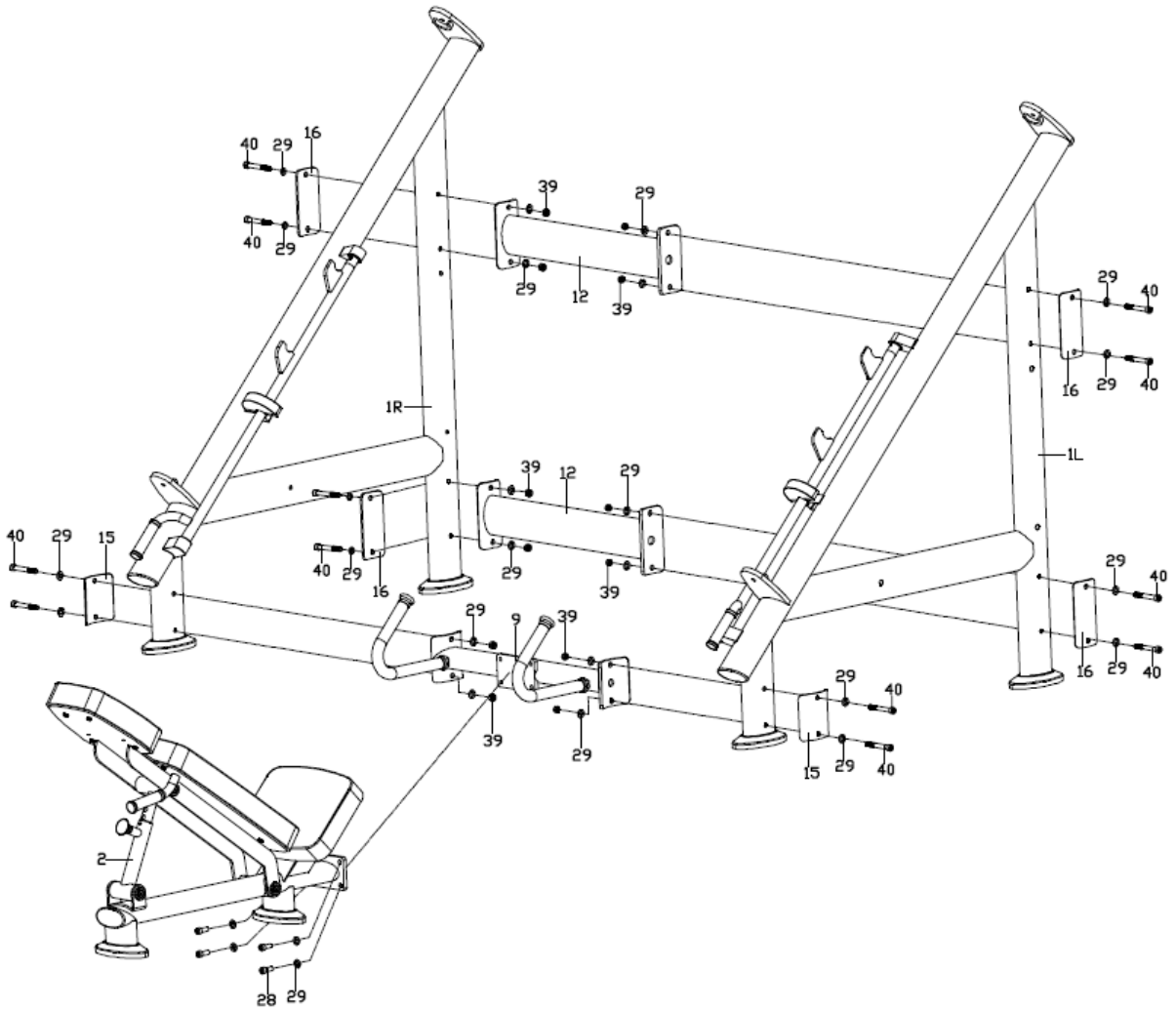

Step 2

Lock the Small handle (14) to the Kick frame (3) tightly with Allen screw (30) and Flat washer (31).

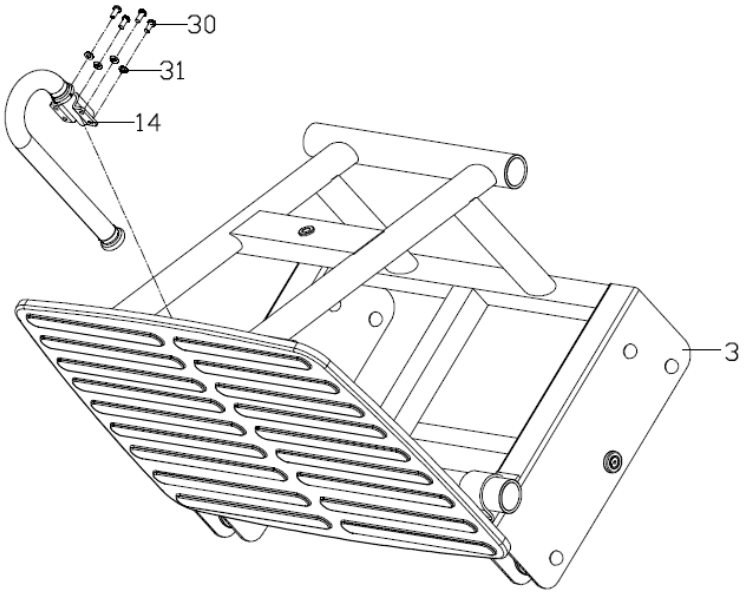

Step 3

1. Insert the Short barbell rod (4), Long barbell rod (5) to the Kick frame (3), adjust the spacing, then lock it tightly with Hexagon flat-tight bolts (63), then install the Load tube (13) on the Kick frame (3).
2. Install the Cushion (60), Spring clip (59) to Short barbell rod (4), Long barbell rod (5), Load tube (13) in turn.

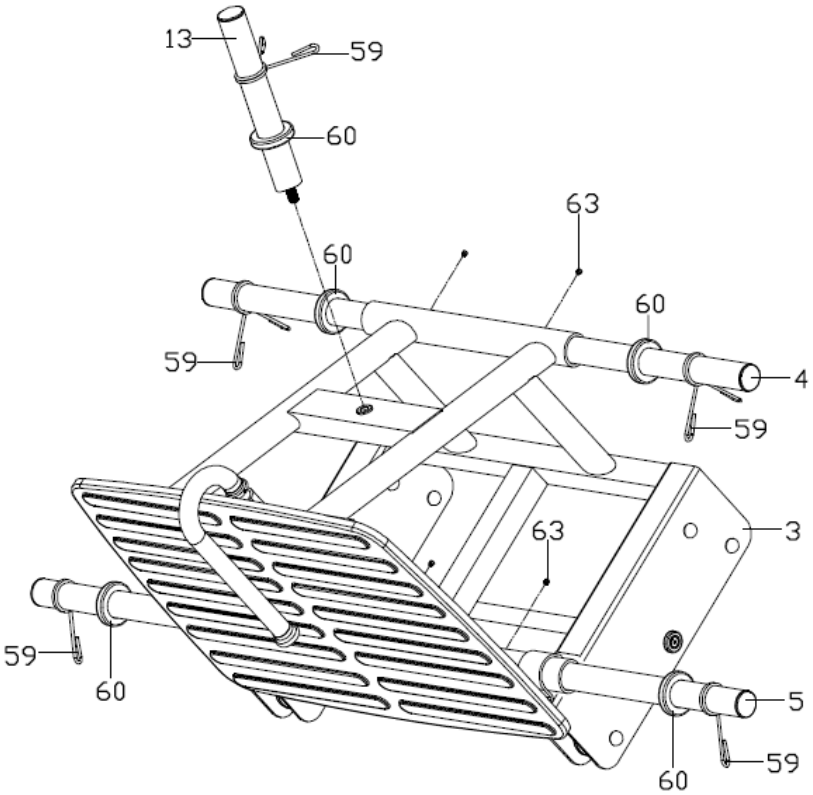

Step 4

1. Insert the Guide rod (11) to the two side of four wheels of the Kick frame (3), then put the Kick frame (3) and Guide rod (11) on the Upright tube (1L/R).
2. Lock the Kick frame (3) and Guide rod (11) to the Upright tube (1L/R) with Hex bolt (18), Aluminum end cap 2 (42).

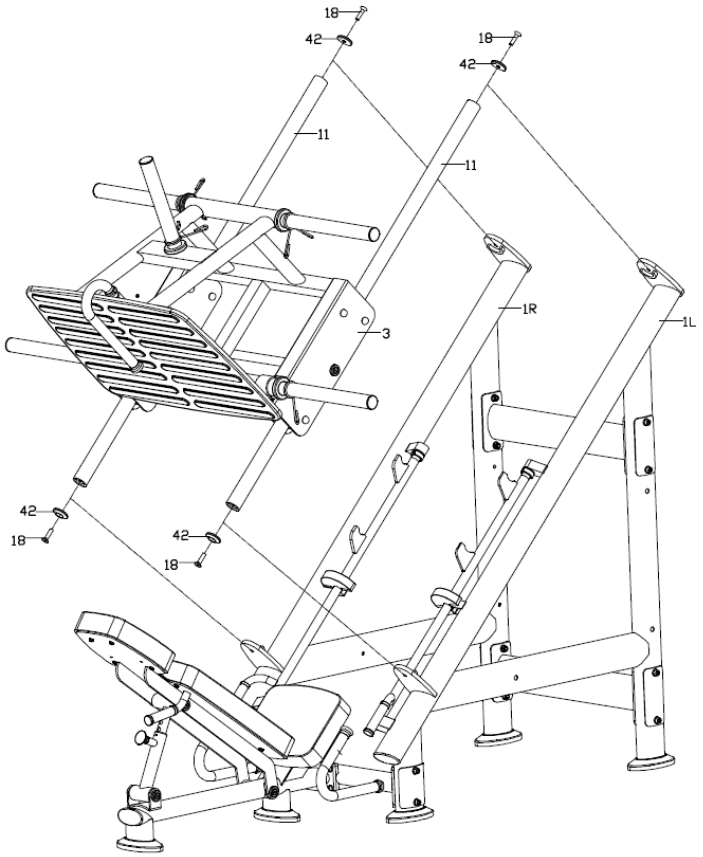

Step 5

Lock the Cover (49) and Plastic barbell rack (50) to the Upright tube (1L/R) tightly with Flat washer (24), Nylon nut (51) and Single head stud (48).

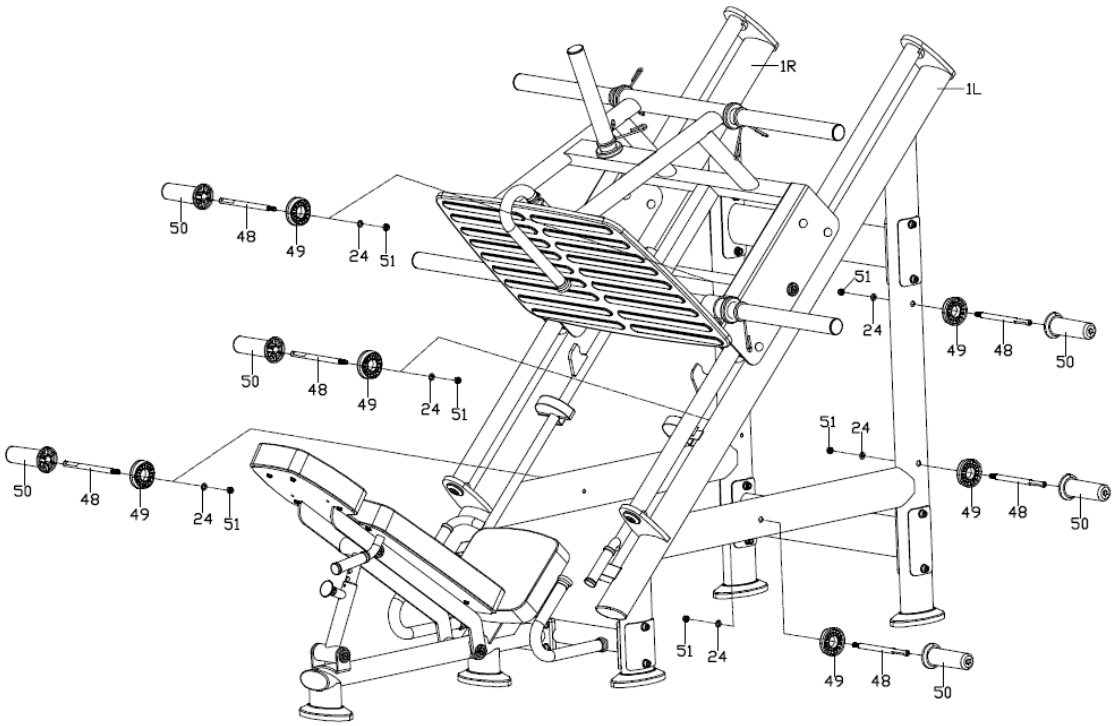

WARM-UP and COOL-DOWN

Using your machine will provide you with several benefits. It will improve your physical fitness, tone your muscles and in conjunction with a calorie-controlled diet, help you lose weight.

WARM-UP PHASE

The purpose of warming up is to prepare your body for exercise and to minimize injuries. Warm up for two to five minutes before strength-training or aerobic exercising. Perform activities that raise your heart rate and warm the working muscles. Activities may include brisk walking, jogging, jumping jacks, jump rope, and running in place.

STRETCHING

Stretching while your muscles are warm after a proper warm-up and again after your strength or aerobic training session is very important. Muscles stretch more easily at these times because of their elevated temperature, which greatly reduces the risk of injury. Stretches should be held for 15 to 30 seconds.

DO NOT BOUNCE.

Remember always to check with your physician before starting any exercise program.

EXERCISE PHASE

This is the stage where you put the effort in. After regular use, the muscles in your legs will become more flexible. Work at your own pace and be sure to maintain a steady tempo throughout. The rate of work should be sufficient to raise your heartbeat into the target zone shown on the graph below.

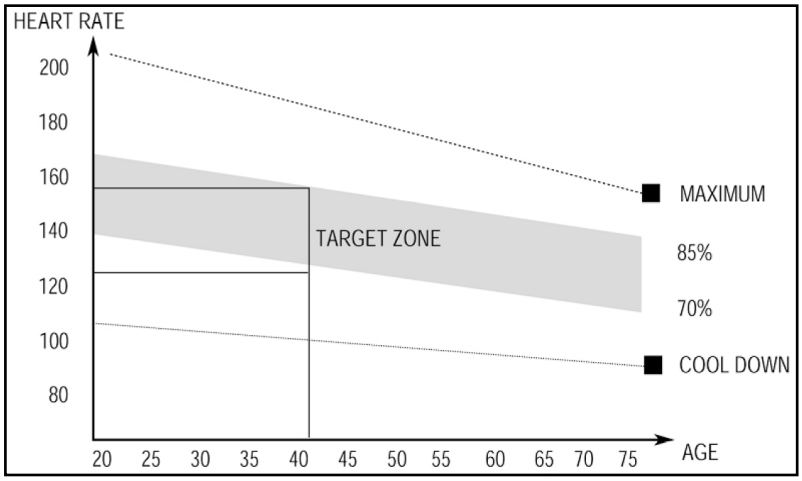

COOL-DOWN PHASE

The purpose of cooling down is to return the body to its normal or near normal, resting state at the end of each exercise session. A proper cool-down slowly lowers your heart rate and allows blood to return to the heart.