USER MANUAL

Junior Jungle Slide Attachment

Find the Digital Manual Online

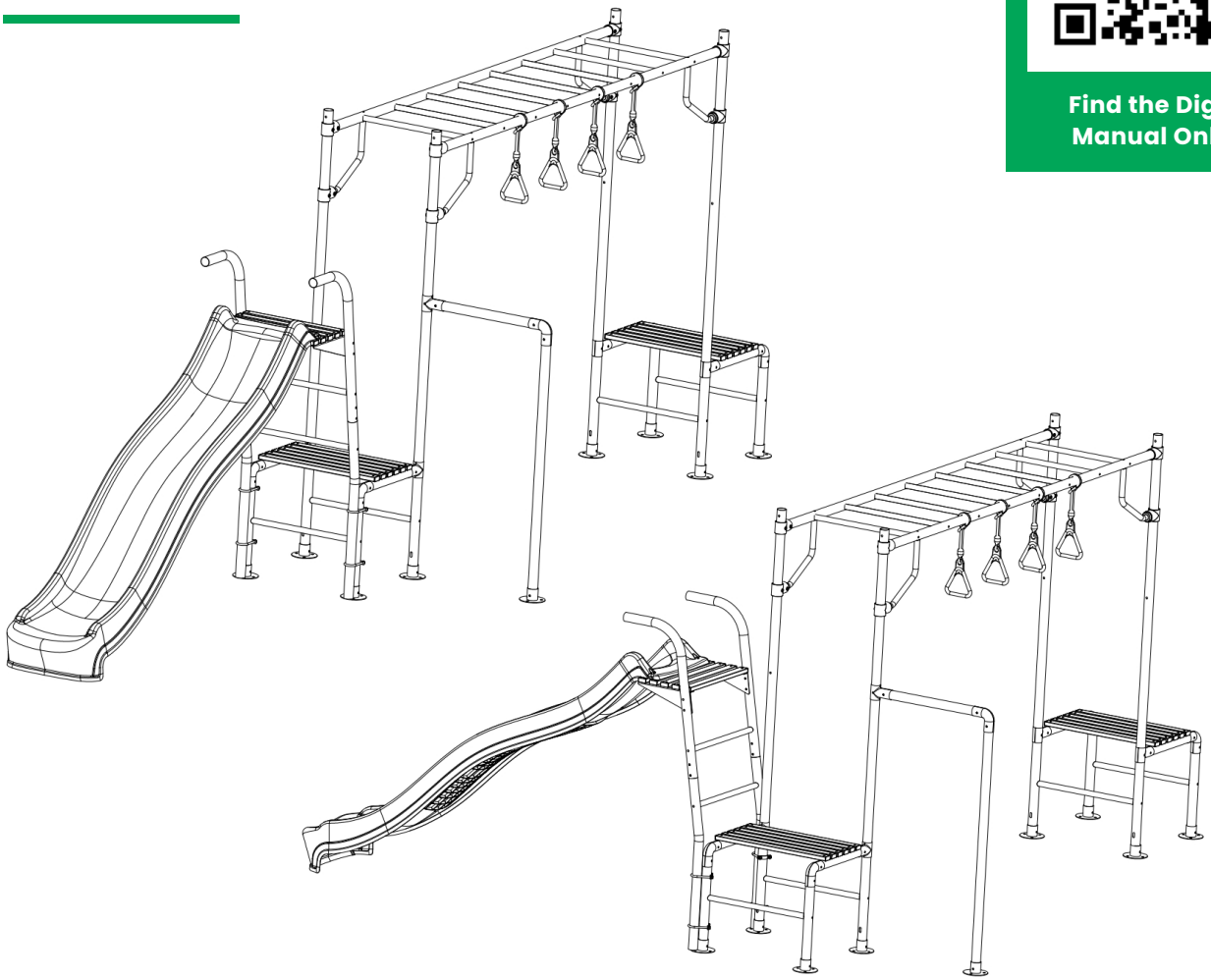

WARNING: The disassembled product may contain small parts which pose a choking hazard to children under 3.

IMPORTANT:
This product may contain sharp points and small parts prior to assembly. The owner's manual contains safety, assembly, use and maintenance instructions. This product must be assembled by an adult who has read and understood these instructions. Keep the packaging away from children and dispose of all packaging before use.

For the installer and your children's safety, it is important to fully read and understand the instructions and safety hazards before commencing the assembly of the product.

NOTE:
This manual should not be used to guide your purchasing decision. Your product, and the contents inside its carton, may vary from what is listed in this manual. This manual may also be subject to updates or changes. Updated manuals are available through our website at ***www.lifespankids.com.au.***

TABLE OF CONTENTS

I. GENERAL SAFETY INSTRUCTIONS 3

II. SAFETY INFORMATION 5

III. PARTS LIST 6

IV. ASSEMBLY INSTRUCTIONS 7

V. MAINTENANCE 10

VI. WARRANTY 11

VII. SECURITY SUPPORT INFORMATION 11

I. GENERAL SAFETY INSTRUCTIONS

GENERAL SAFETY

This product is intended for outdoor domestic use only.

• Choking Hazard - Packaging contains small parts.
• User age recommended for 3+ years old.
• Maximum users: one user at a time
• Maximum user weight: 50kg per function.
• Fall height: 2.0m

1.1 DANGER FOR CHILDREN

WARNING: No eating while using the product at the same time.

• Children do not recognize potential dangers from this product. The unassembled product must be stored out of reach of children and pets.
• This product may only be used with adult supervision at all times.
• The packaging material is not suitable for children due to choking and suffocation hazards.

1.2 RISK OF INJURIES

• Do not use the product if it is damaged or defective. If it is damaged or defective, please contact a qualified technician.
• Check the product before each use. Defective parts must be changed immediately as they can impair the function and the safety of the product.
• No more than one person to each section of the product at the same time.
• Use the product only on even and non-slipping surfaces. Never use it near water and keep sufficient space around for safety.
• Beware of moving parts such as the springs or elastics, which could catch your arms and legs. Do not place any objects or body parts in the product's openings.

1.3 PRODUCT DAMAGE

• Do not make alterations to the product. Only use original spare parts. Qualified technicians should only carry out repairs – improper repairs can lead to danger for the user. Use this product only as described in this manual.

ASSEMBLY ADVICE

• The assembly of the product must be done carefully and by an able-bodied adult. If in any doubt, ask a technically qualified person.

• Before you start with the assembly, read the instructions carefully.

• Remove all packaging materials and lay down all parts on an open space. This gives you an overview and simplifies the assembly procedure.

• Check with the parts list that all parts are available. Dispose of the packaging material when the assembly is completed.

• Beware that when using tools or doing technical work, there is always a risk of injuries. Assemble the product with care.

• Create a danger free environment; for example, do not let tools lay around the workspace. Store the packaging material in a way that cannot cause any danger.

• After installing the product according to the instruction manual, ensure all screws, bolts and nuts are correctly installed and tightened and that all joints are secure.

• Reasonable space must be kept between the product and possible sources of danger, such as other equipment swimming pools and fences.

• The product must be assembled correctly before use.

• Your play structure must be installed on a flat horizontal surface with a minimum of 2m between it and any structure or obstacle such as a fence, garage house, tree branches, cloths lines, or electric cables.

• Modifications made to the original product shall be carried out according to the instructions of the manufacturer.

• The product must always be used in a well-lit area.

• Do not place anything under the product.

• Use gloves during assembly and disassembly.

• Outdoor products should be equipped with a device that in strong wind conditions avoid displacement due to wind (e.g. steel bars in the ground or loads like sandbag or water bags).

• In certain areas during winter, snow buildup and the low temperatures can damage the product. It is recommended to remove snow buildup and to store the product indoor.

• We strongly recommend visual inspections every 3 months to ensure the integrity of the entire product. Replace any parts as necessary.

II. SAFETY INSTRUCTIONS

- The safety instructions of the product should always be considered and obeyed.

- Using the product may result in permanent injury such as paralysis, or even death. Falling off the product may lead to injuries, particularly to the back, neck or head.

- No clothes with hooks or lose parts should be worn or carried during product usage in order to avoid hooks getting caught and causing injury.

- Strong winds can result in the product being blown away or damaged. If strong winds are predicted the product must be disassembled and moved to a sheltered area or sufficiently anchored down.

- Moving the product whilst assembled may affect the integrity of the frame. Should it be necessary to move the product, please consider the following:

    1. Force to be evenly spaced around the frame to lift the product off the ground.
    2. The product must be carried horizontally.
    3. Use caution whilst moving as it could bend the product frame.

- Users should be familiar with the assembly manual. This manual contains assembly guidance; selected precautionary measures as well as recommendations for servicing and maintenance of the product, in order to ensure a secured and fun use of the product.

- It is the responsibility of the owner or the supervisor to guarantee that all users of the product are informed sufficiently of all warning references and safety instructions.

For the supervisor

The supervisor's role is to make sure users are aware of all safety precautions and that these precautions are enforced. When a supervisor is not available, the product may be disassembled or covered to limit access.

- The product can be only used if it is in good condition, worn or damaged parts should be replaced.
- Objects, which could be dangerous to the user, should be away from the product.
- Avoid unauthorized and unsupervised use of the product.
- Do not use the product under influence of alcohol or drugs (incl. medicines).
- Do not use the product as a jumping platform for other articles.

III. PARTS LIST

Parts List - Box LK426

FC4261A x 2pcs



FC4261B x 2pcs

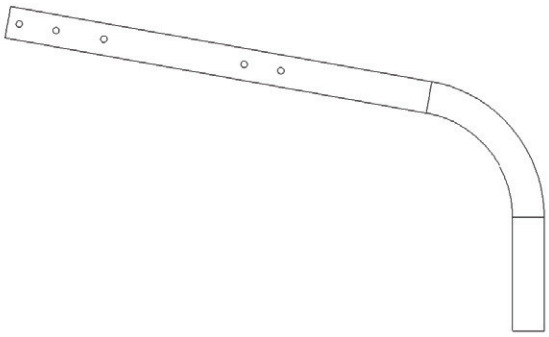

FC4262 x 2pcs



FC4263 x 5pcs



Accessories List - Box LK426

BR10 x 1pc

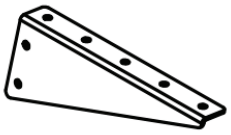

BR11 x 1pc

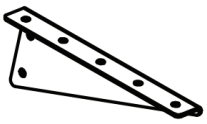

U Bolt x 4pcs

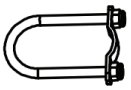

A M8x32mm - 4pcs



Nut / Washer / Bolt

B M8x35mm - 4pcs



Nut / Washer / Bolt

C M8x22mm - 10pcs



Nut / Washer / Bolt

D M8x50mm - 4pcs



E Bolt Set M8x35mm - 2pcs

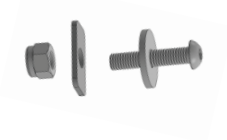

Tools -Allen Key x 2



IV. ASSEMBLY INSTRUCTIONS

STEP 1

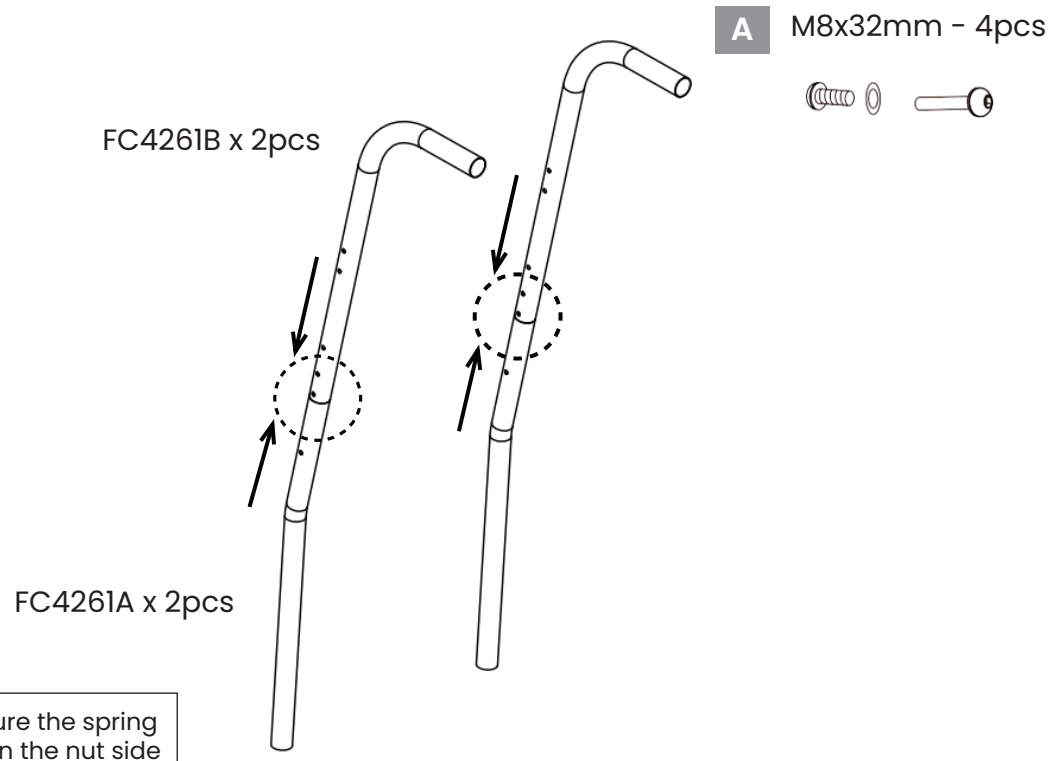

IMPORTANT: Ensure the spring washer is fitted on the nut side

STEP 2

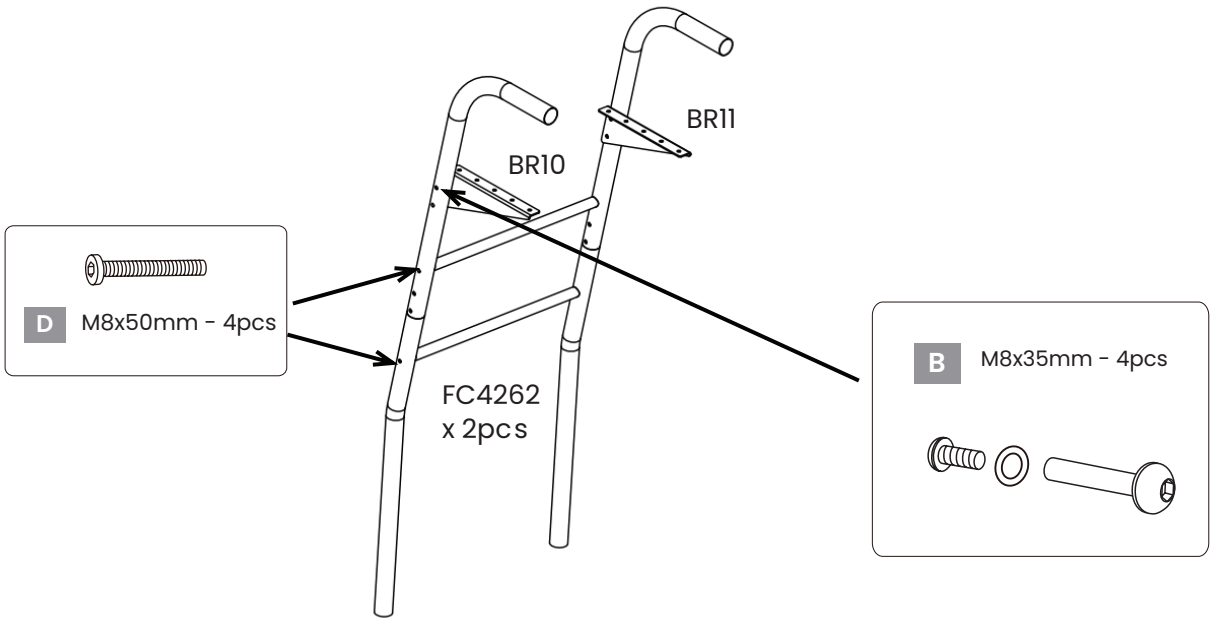

IMPORTANT: Ensure the spring washer is fitted on the nut side

STEP 3

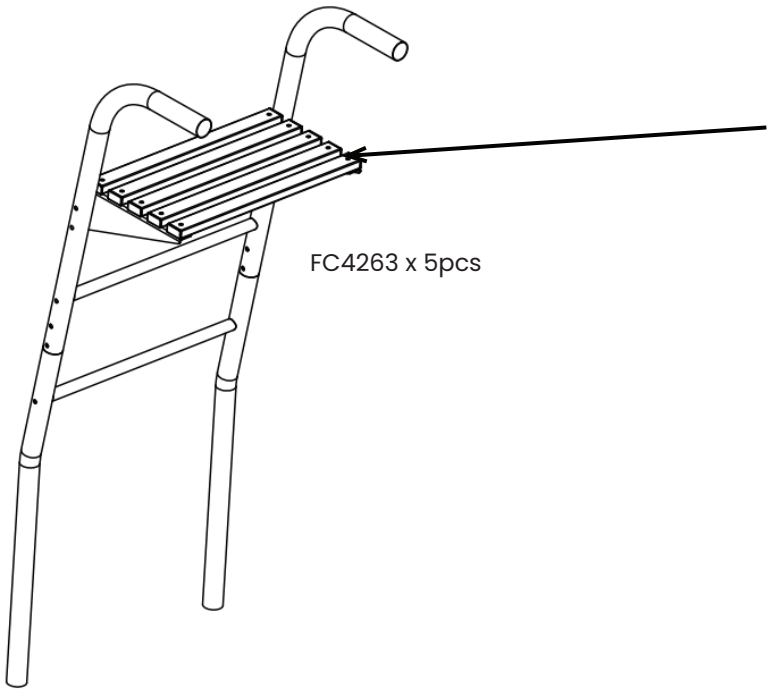

FC4263 x 5pcs

C M8x22mm - 10pcs

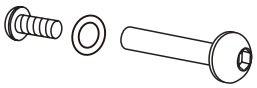

IMPORTANT: Ensure the spring washer is fitted on the nut side

STEP 4

Slide ladder can be mounted 2 different ways.
Take note of the U bolt mounting.

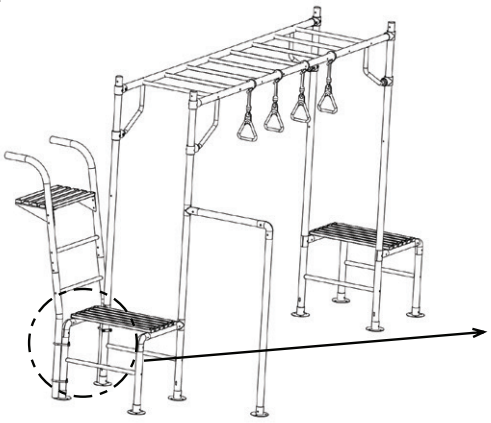

Option 1

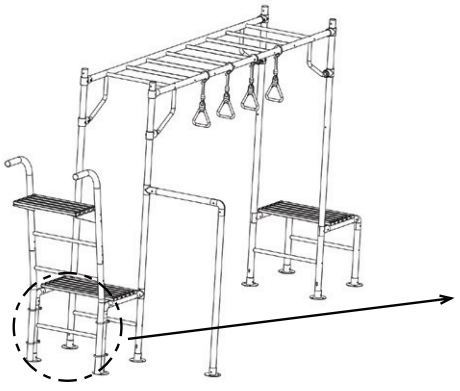

Option 2

View from the top

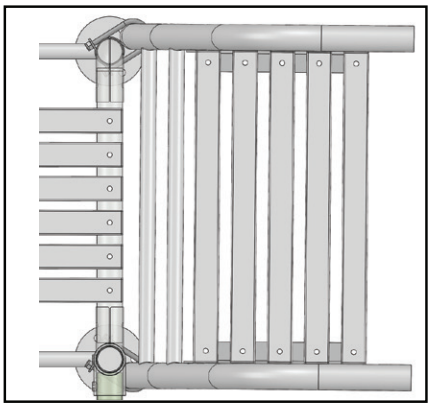

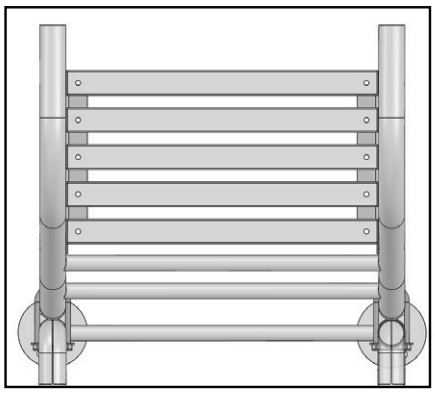

U Bolt x 4pcs



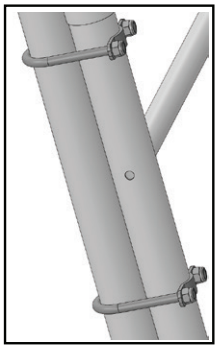

STEP 5

Option 1

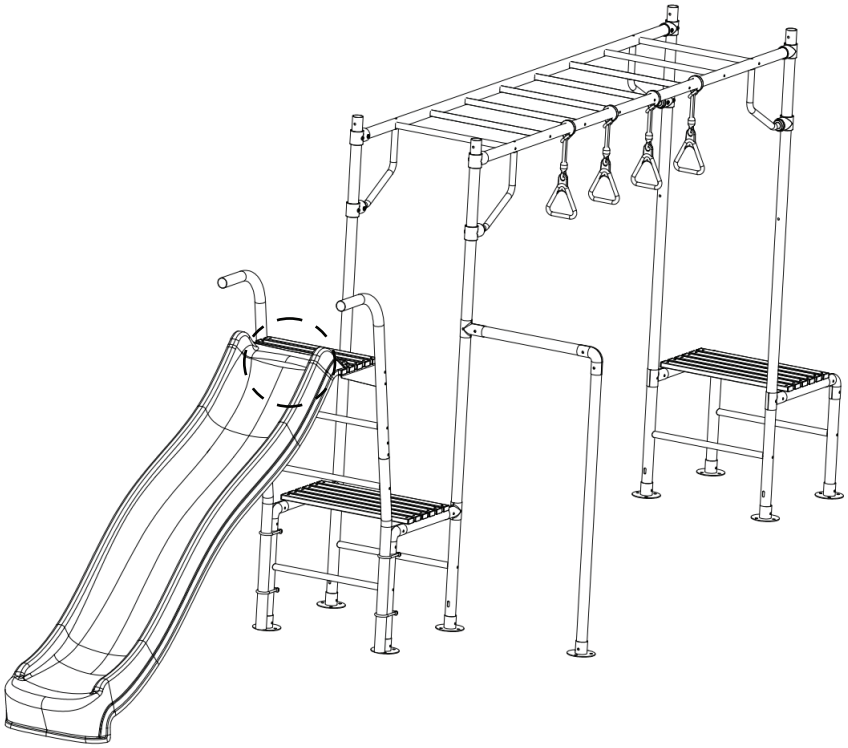

Option 2

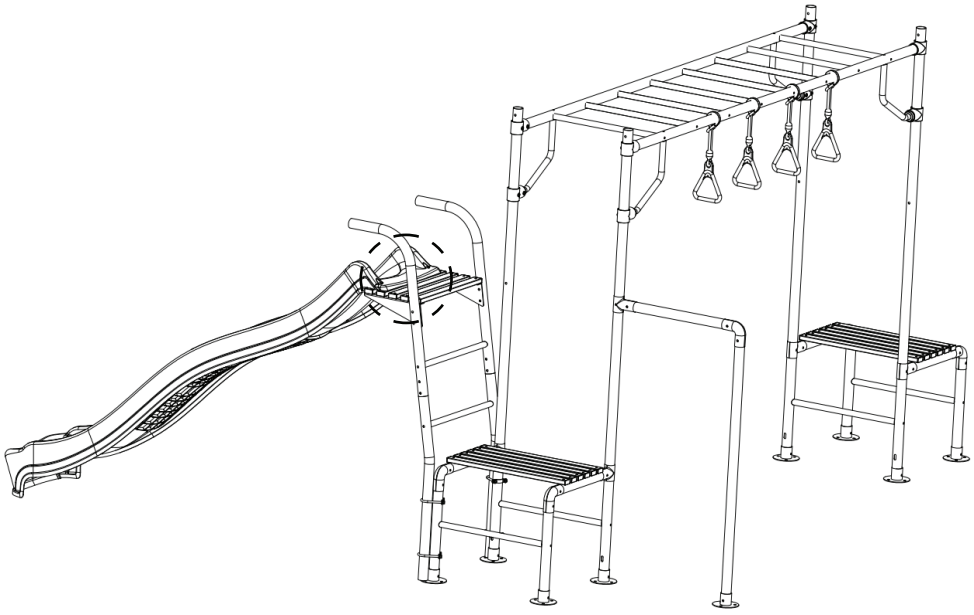

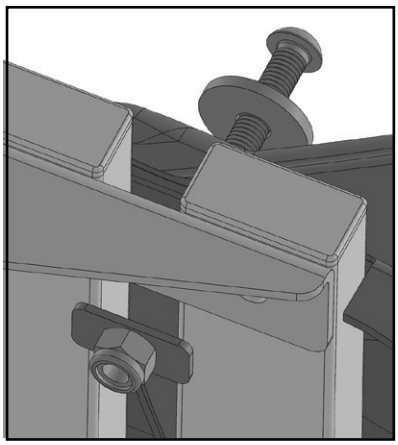

E Bolt Set M8x35mm - 2pcs

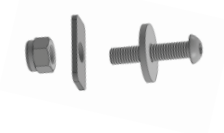

V. MAINTENANCE



WARNING: Please keep for future reference.

We recommend regular maintenance to be conducted at the beginning of each season as well as at regular intervals during the usage session for your play equipment to ensure all main parts/fixings are tightly secured, well-oiled and intact to avoid failure, injury or hazards.

GENERAL ADVICE

It is of particular importance that this is followed at the beginning of each season as well as at regular intervals during the usage season.

- Check the accessories monthly as well as the play equipment's structure to prevent falling risks.
- Check and retighten screws, bolts, and all other hardware elements as necessary.

    a. Do not over tighten to avoid damaging the thread or cracking the surrounding wood.

- Check all coverings and bolts for sharp edges and replace when required.
- Lubricate all moving metallic parts.
- Equipment situated in a high moisture or high salt content locations are more likely to oxidant and rust. Regular checks should be done more often. When signs of oxidation and / or rust appear on various metallic parts of your equipment, sand rusted areas and tubular members and repaint using a non-lead-based paint when required.
- Where applicable: check swing seats, chains, ropes, and other means of attachment for evidence of deterioration.
- Replace when required in accordance with the owner's manual.

If your play structure is disassembled, be sure to clearly mark any attached metal plates to prevent accidents. Check all bolt covers and sharp edges and replace them if necessary.

For longer accessory life, we suggest storing them during the winter.

VI. WARRANTY

AUSTRALIAN CONSUMER LAW

Many of our products come with a guarantee or warranty from the manufacturer. In addition, they come with guarantees that cannot be excluded under the Australian Consumer Law. You are entitled to a replacement or refund for a major failure and compensation for any other reasonably foreseeable loss or damage.

You are entitled to have the goods repaired or replaced if the goods fail to be of acceptable quality and the failure does not amount to a major failure. Full details of your consumer rights may be found at **www.consumerlaw.gov.au**.

Please visit our website to view our full warranty terms and conditions:
www.lifespankids.com.au/Warranty-Policy-Kids

WARRANTY AND SUPPORT

Any claim against this warranty must be made through your original place of purchase. Proof of purchase is required before a warranty claim may be processed. If you have purchased this product from the Official Lifespan Kids website, please visit **www.lifespankids.com.au/warranty-form**

For support outside of warranty, if you wish to purchase replacement parts or request a repair or service, please visit **www.lifespankids.com.au/warranty-form** and fill in our Repair/Service Request Form or Parts Purchase Form.

VII. SECURITY SUPPORT INFORMATION

REPORTING

To report a cyber security issue, please email **support@gflgroup.com.au** with product details and a description of the issue. We will acknowledge receipt and provide updates as it is investigated.

DEVICE SUPPORT PERIOD

This product will receive security updates for a minimum of 12 months from the date of purchase.



LIFESPAN KIDS

www.lifespankids.com.au