LIFESPAN KIDS

USER MANUAL
Burleigh Cubby House Pergola

Find the Digital Manual Online

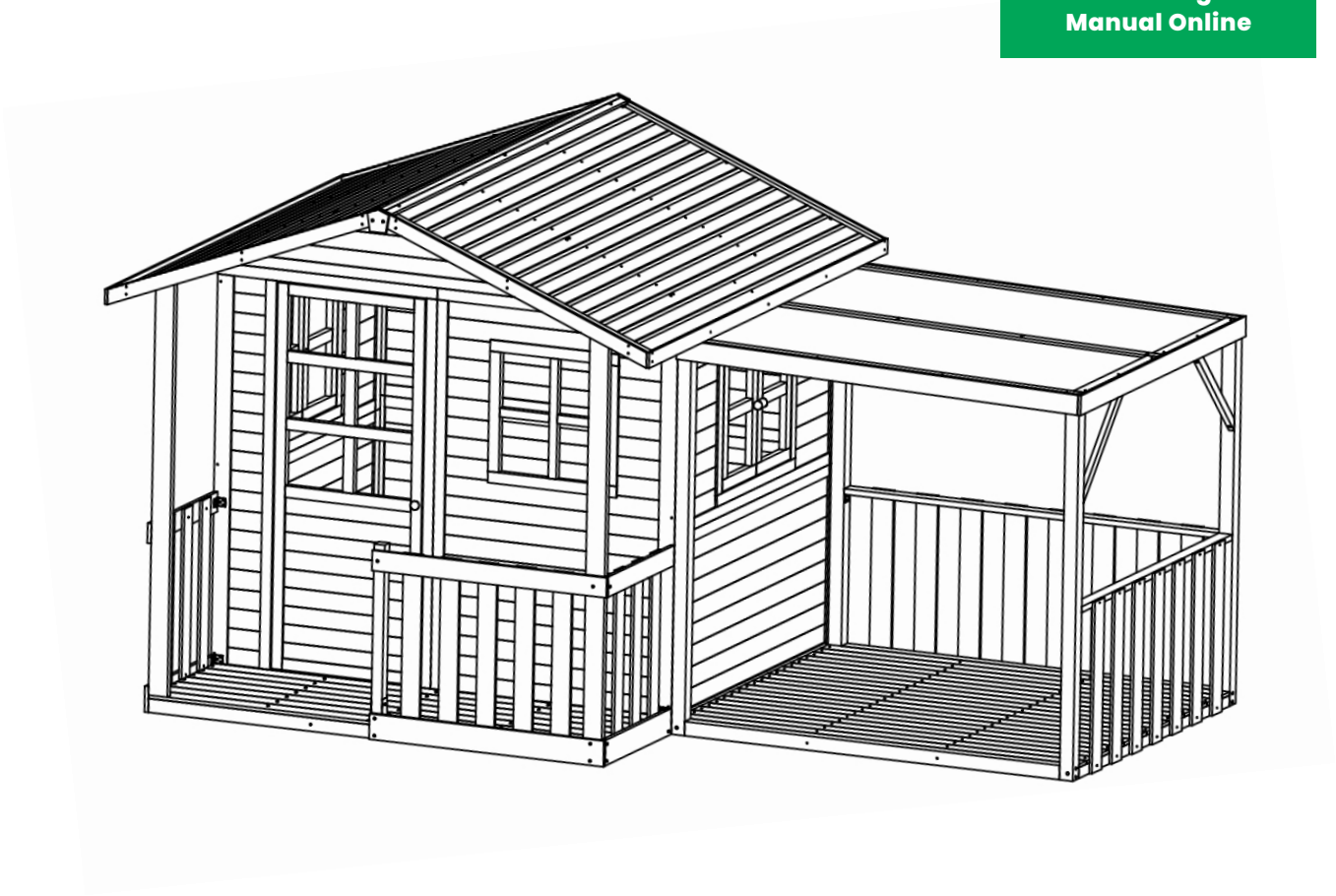

WARNING: The disassembled product may contain small parts which pose a choking hazard to children under 3.

IMPORTANT:
This product may contain sharp points and small parts prior to assembly. The owner's manual contains safety, assembly, use and maintenance instructions. This product must be assembled by an adult who has read and understood these instructions. Keep the packaging away from children and dispose of all packaging before use.

For the installer and your children's safety, it is important to fully read and understand the instructions and safety hazards before commencing the assembly of the product.

NOTE:
This manual should not be used to guide your purchasing decision. Your product, and the contents inside its carton, may vary from what is listed in this manual. This manual may also be subject to updates or changes. Updated manuals are available through our website at *www.lifespankids.com.au.*

TABLE OF CONTENTS

I. GENERAL SAFETY INSTRUCTIONS 3

1.1 Danger for Children 3

1.2 Risk of Injuries 3

1.3 Product Damage 3

1.4 Assembly Advice 4

II. SAFETY INSTRUCTIONS 5

III. EXPLODED DIAGRAM 7

IV. ASSEMBLY INSTRUCTIONS 8

IV. MAINTENANCE 19

V. WOOD ADVICE 20

VI. CLEANING 21

VIII. WARRANTY 22

I. GENERAL SAFETY INSTRUCTIONS

NOTE: This product is intended for outdoor domestic use only.

1.1 DANGER FOR CHILDREN

WARNING: No eating while using the product at the same time.

- Children do not recognize potential dangers from this product. The unassembled product must be stored out of reach of children and pets.
- This product may only be used with adult supervision at all times.
- The packaging material is not suitable for children due to choking and suffocation hazards.

1.2 RISK OF INJURIES

- Do not use the product if it is damaged or defective. If it is damaged or defective, please contact a qualified technician.
- Check the product before each use. Defective parts must be changed immediately as they can impair the function and the safety of the product.
- For safety, only one person should use the trampoline, slide, swing, or any other moving equipment at a time, unless the product specifically provides for use by more than one person. Failure to follow this guideline can result in serious injury. Always follow the manufacturer's instructions and safety recommendations for maximum users.
- Use the product only on even and non-slipping surfaces. Never use it near water and keep sufficient space around for safety.
- Beware of moving parts such as the springs or elastics, which could catch your arms and legs.
- Do not place any objects or body parts in the product's openings.

1.3 PRODUCT DAMAGE

- Do not make alterations to the product. Only use original spare parts. Qualified technicians should only carry out repairs – improper repairs can lead to danger for the user. Use this product only as described in this manual.

1.4 ASSEMBLY ADVICE

- The assembly of the product must be done carefully and by an able-bodied adult. If in any doubt, ask a technically qualified person.
- Before you start with the assembly, read the instructions carefully.
- Remove all packaging materials and lay down all parts on an open space. This gives you an overview and simplifies the assembly procedure.
- Check with the parts list that all parts are available. Dispose of the packaging material when the assembly is completed.
- Beware that when using tools or doing technical work, there is always a risk of injuries. Assemble the product with care.
- Create a danger free environment; for example, do not let tools lay around the workspace. Store the packaging material in a way that cannot cause any danger.
- After installing the product according to the instruction manual, ensure all screws, bolts and nuts are correctly installed and tightened and that all joints are secure.
- Reasonable space must be kept between the product and possible sources of danger, such as other equipment swimming pools and fences.
- The product must be assembled correctly before use.
- Your play structure must be installed on a flat horizontal surface with a minimum of 2m between it and any structure or obstacle such as a fence, garage house, tree branches, cloths lines, or electric cables.
- Modifications made to the original product shall be carried out according to the instructions of the manufacturer.
- The product must always be used in a well-lit area.
- Do not place anything under the product.
- Use gloves during assembly and disassembly.
- Outdoor products should be equipped with a device that in strong wind conditions avoid displacement due to wind (e.g. steel bars in the ground or loads like sandbag or water bags).
- In certain areas during winter, snow buildup and the low temperatures can damage the product. It is recommended to remove snow buildup and to store the product indoor.
- We strongly recommend visual inspections every 3 months to ensure the integrity of the entire product. Replace any parts as necessary.

II. SAFETY INSTRUCTIONS

- The safety instructions of the product should always be considered and obeyed.

- Using the product may result in permanent injury such as paralysis, or even death. Falling off the product may lead to injuries, particularly to the back, neck or head.

- No clothes with hooks or lose parts should be worn or carried during product usage in order to avoid hooks getting caught and causing injury.

- Strong winds can result in the product being blown away or damaged. If strong winds are predicted the product must be disassembled and moved to a sheltered area or sufficiently anchored down.

- Moving the product whilst assembled may affect the integrity of the frame. Should it be necessary to move the product, please consider the following:

    1. Force to be evenly spaced around the frame to lift the product off the ground.
    2. The product must be carried horizontally.
    3. Use caution whilst moving as it could bend the product frame.

- Users should be familiar with the assembly manual. This manual contains assembly guidance; selected precautionary measures as well as recommendations for servicing and maintenance of the product, in order to ensure a secured and fun use of the product.

- It is the responsibility of the owner or the supervisor to guarantee that all users of the product are informed sufficiently of all warning references and safety instructions.

FOR THE SUPERVISOR:

The supervisor's role is to make sure users are aware of all safety precautions and that these precautions are enforced. When a supervisor is not available, the product may be disassembled or covered to limit access.

- The product can be only used if it is in good condition, worn or damaged parts should be replaced.
- Objects, which could be dangerous to the user, should be away from the product.
- Avoid unauthorized and unsupervised use of the product.
- Do not use the product under influence of alcohol or drugs (incl. medicines).
- Do not use the product as a jumping platform for other articles.

CONSUMER INFORMATION SHEET FOR PLAYGROUND SURFACING MATERIALS:

The US Consumer Product Safety Commission (CPSC) estimates that about 100 000 playground equipment-related injuries resulting from falls to the ground surface are treated annually in US hospital emergency rooms. Injuries involving this hazard pattern tend to be among the most serious of all playground injuries, and have the potential to be fatal, particularly when the injury is to the head. The surface under and around playground equipment can be a major factor in determining the injury-causing potential of a fall. It is self-evident that a fall on to a shock-absorbing surface is less likely to cause a serious injury than a fall onto a hard surface. Playground equipment should never be placed on hard surfaces, such as concrete or asphalt, and while grass may appear to be acceptable, it may quickly turn to hard-packed earth in areas of high traffic. Shredded bark mulch, wood chips, tine sand or the gravel are considered to be acceptable shock absorbing surfaces when installed and maintained at a sufficient depth under and around playground equipment.

Table B.1 lists the maximum height from which a child would not be expected to sustain a life-threatening head injury in a fall on to four different loose-fill surfacing materials if they are Installed and maintained at depths of 150 mm, 225 mm and 300 mm.

TABLE B.1: Fall height in millimetres from which a life-threatening head injury would not be expected.

TYPE OF MATERIAL	DEPTH OF SURFACING MATERIAL		
	150mm	225mm	300mm
Double Shredded Bark Mulch	1800	3000	3300
Wood Chips	1800	2100	3600
Fine Sand	1500	1500	2700
Fine Gravel	1800	2100	3000

However, it should be recognised that all injuries due to falls cannot be prevented, no matter what surfacing material is used.

It is recommended that a shock absorbing material extend a minimum of 1800mm in all directions from the perimeter of stationary equipment such as climbing frames and slides. However, because children may deliberately jump from a moving swing, the shock absorbing material should extend in the front and rear of a swing a minimum distance of twice the height of the pivot point measured from a point directly beneath the pivot on the supporting structure.

This information is intended to assist in comparing the relative shock-absorbing properties of various materials. No particular material is recommended over another. However, each material is only effective when properly maintained. Materials should be checked periodically and replenished to maintain correct depth as determined necessary for the equipment in question. The choice of a material depends on the type and height of the playground equipment, the availability of the material in a particular area, and its cost.

III. EXPLODED DIAGRAM

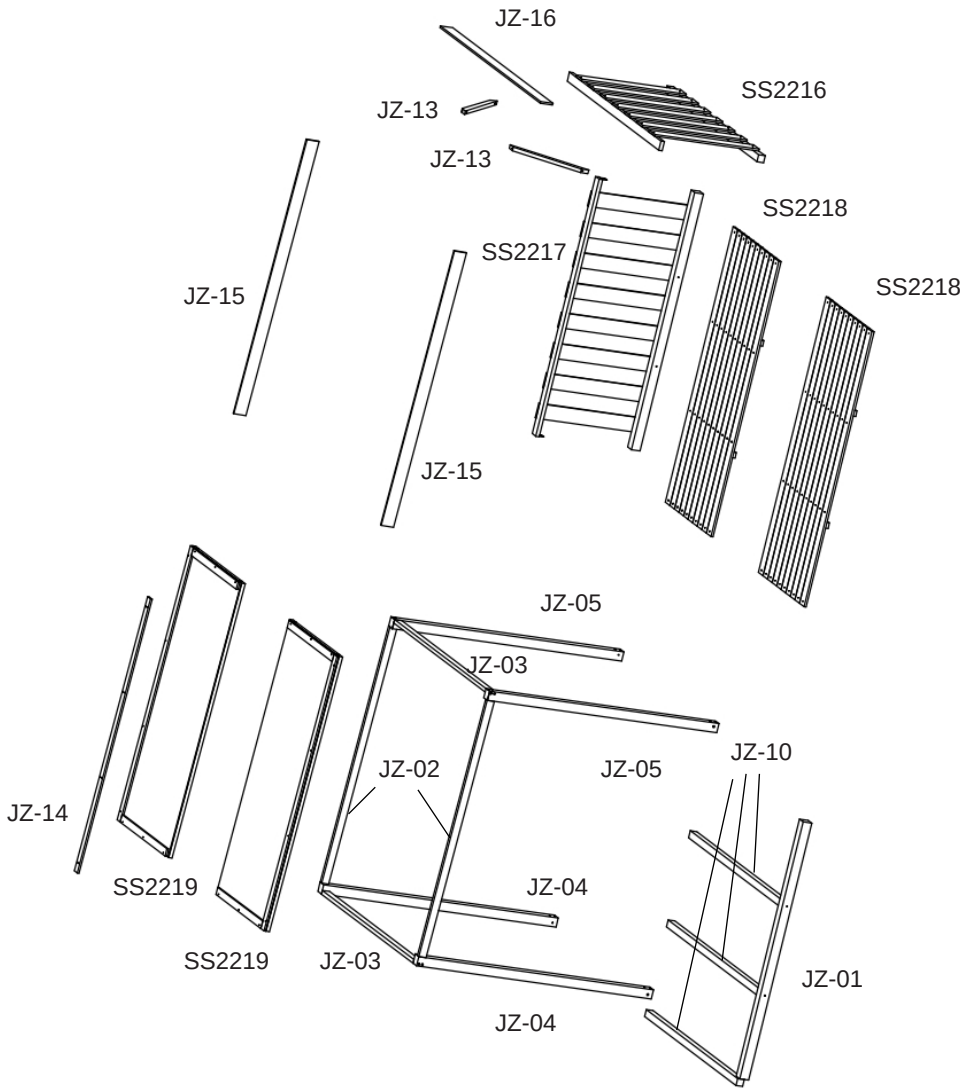

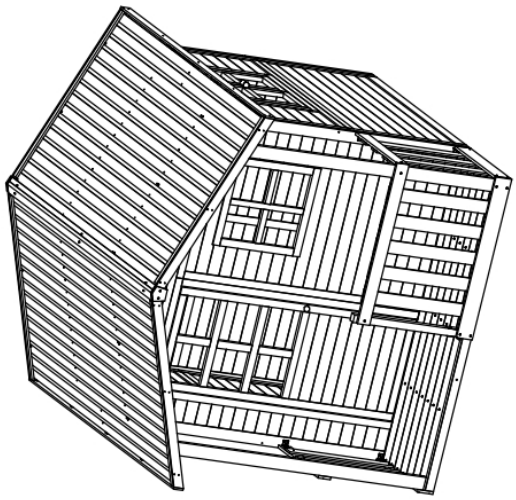

III. ASSEMBLY INSTRUCTIONS

PARTS LIST

JZ-04 2PCS

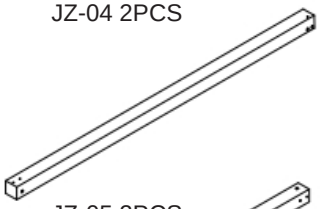

JZ-05 2PCS

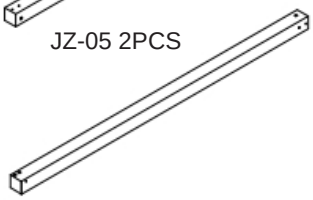

JZ-01 1PC

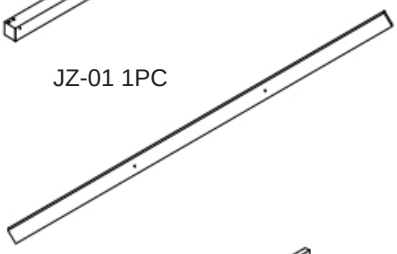

JZ-02 2PCS

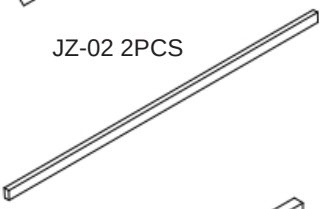

JZ-03 2PCS

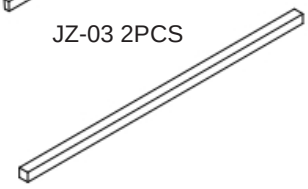

JZ-13 2PCS

JZ-15 2PCS

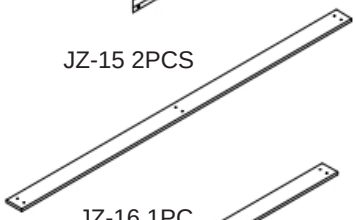

JZ-16 1PC

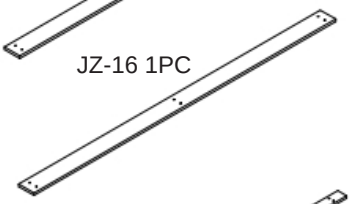

JZ-14 1PC

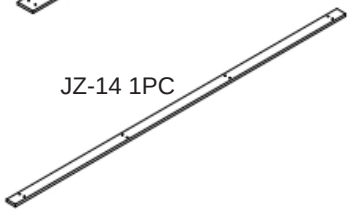

SS2217 1PC

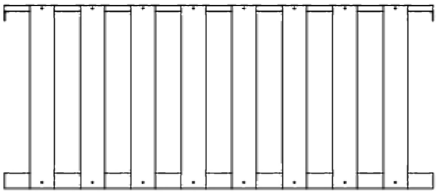

SS2216 1PC

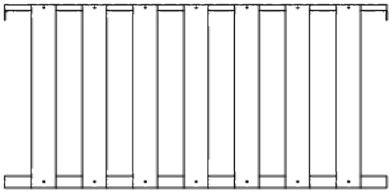

SS2218 2PCS

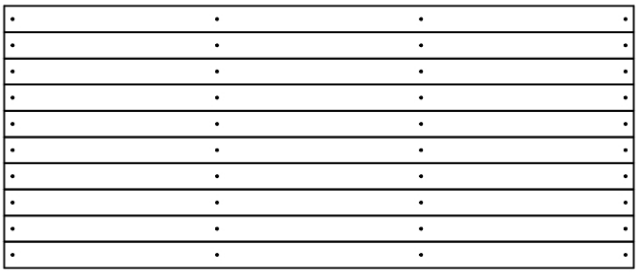

SS2219 2PCS

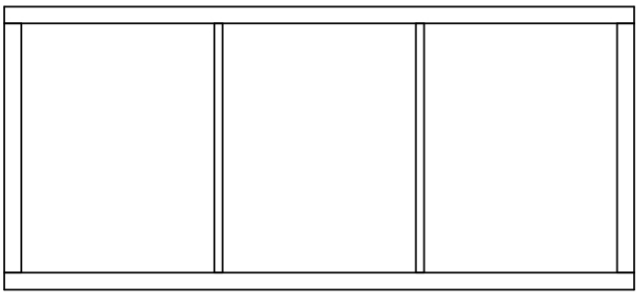

JZ-10 3PCS

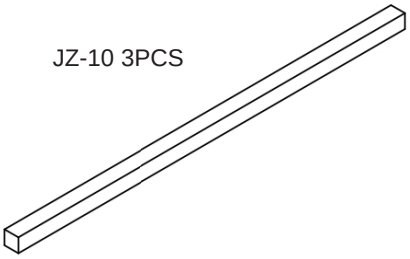

A

M4x45mm 20pcs

B

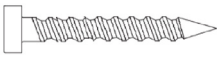

M4X25MM 98pcs

D

M3.5X15MM 12pcs

E

M4X60MM 38pcs

F

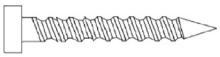

M4X35MM 8pcs

SET UP

Important:
- Do not over tighten the screws as this can cause the wood to split.
- Pergola is designed to be installed next to Burleigh Cubby House.

STEP 1

E

M4X60MM 6pcs

Attention:
Please note that the pergola top has a drainage slope. When assembling, pay attention to the angle on the top surface of the posts. Please refer to the text marking.

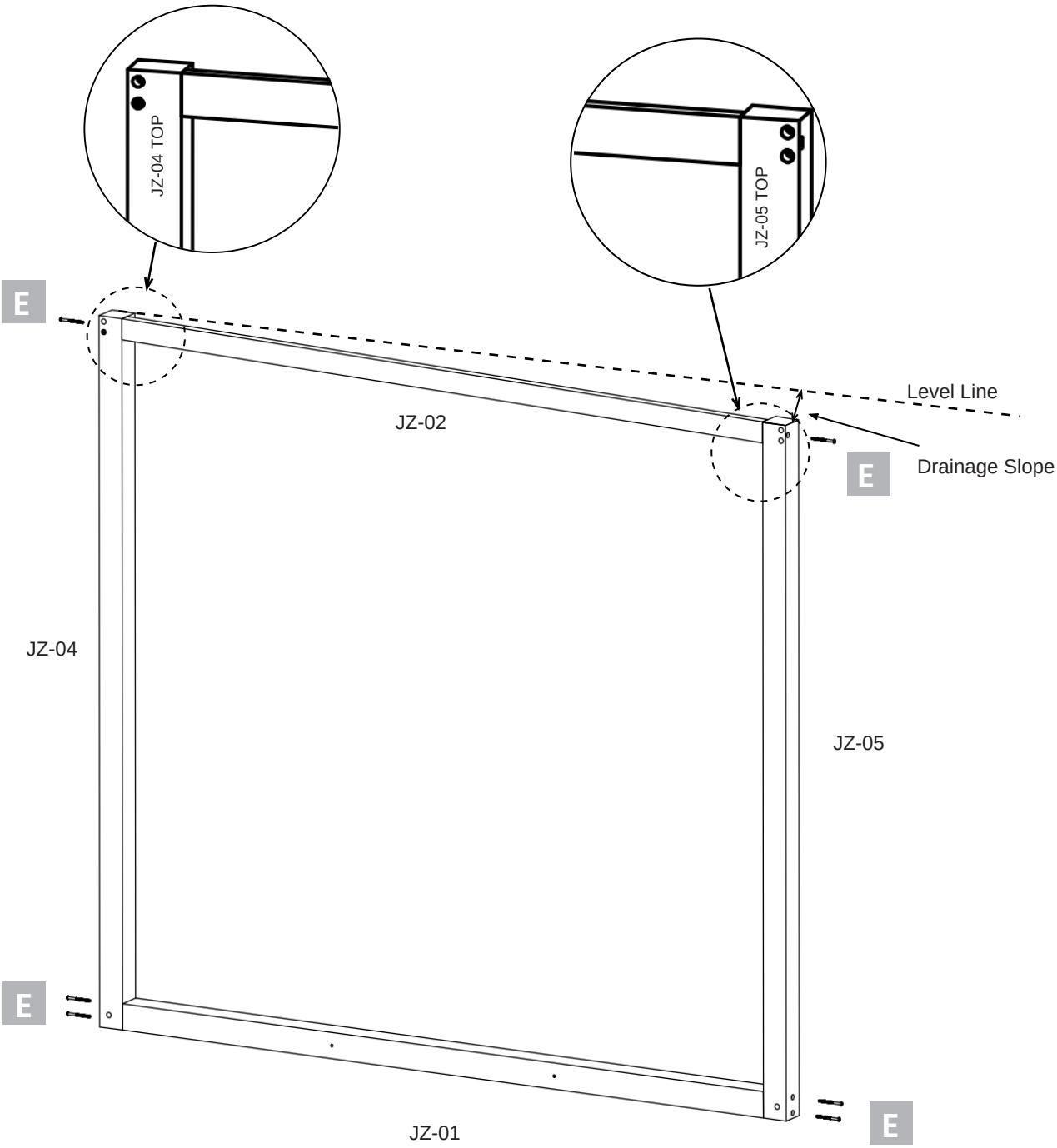

STEP 2

D

M3.5X15MM 6pcs

E

M4X60MM 2pcs

Attention:
When assembling, please make sure the drainage slope of the two posts-JZ05 faces the same direction.

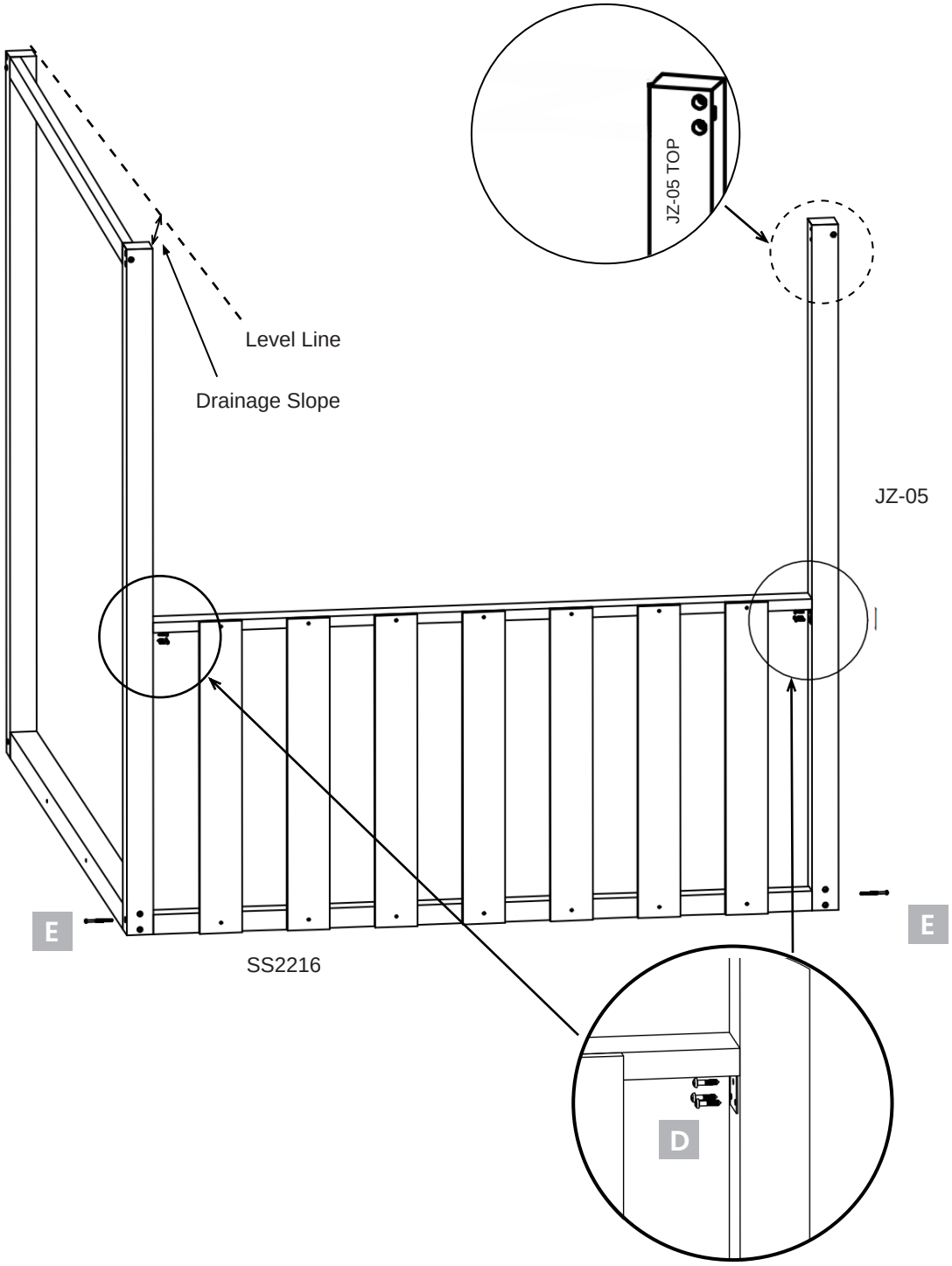

STEP 3

D

M3.5X15MM 6pcs

E

M4X60MM 4pcs

Attention:
When assembling, please make sure the drainage slope of the two posts-JZ04 faces the same direction.

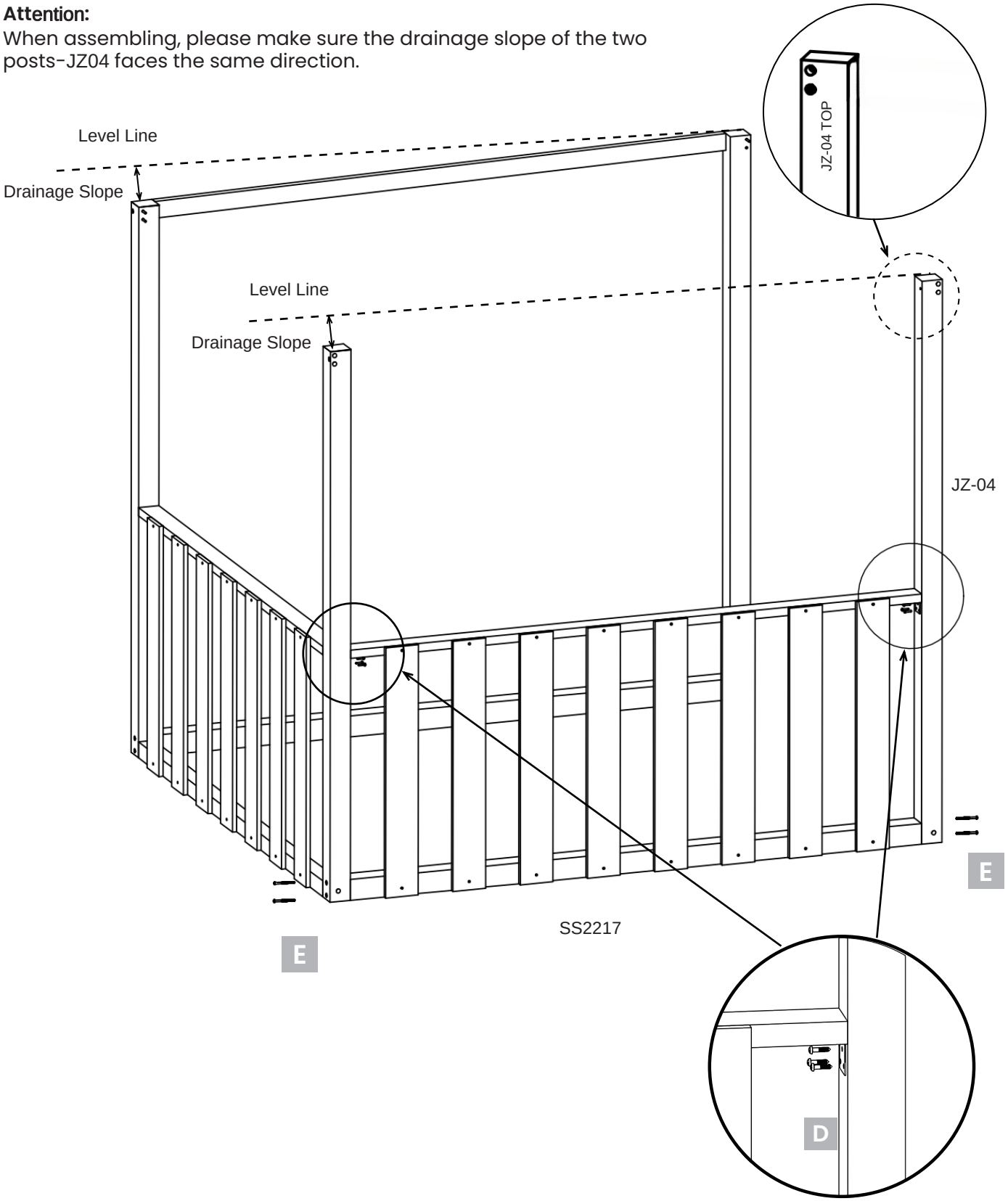

STEP 4

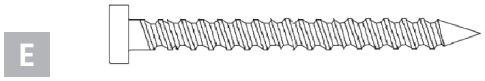

M4X60MM 6pcs

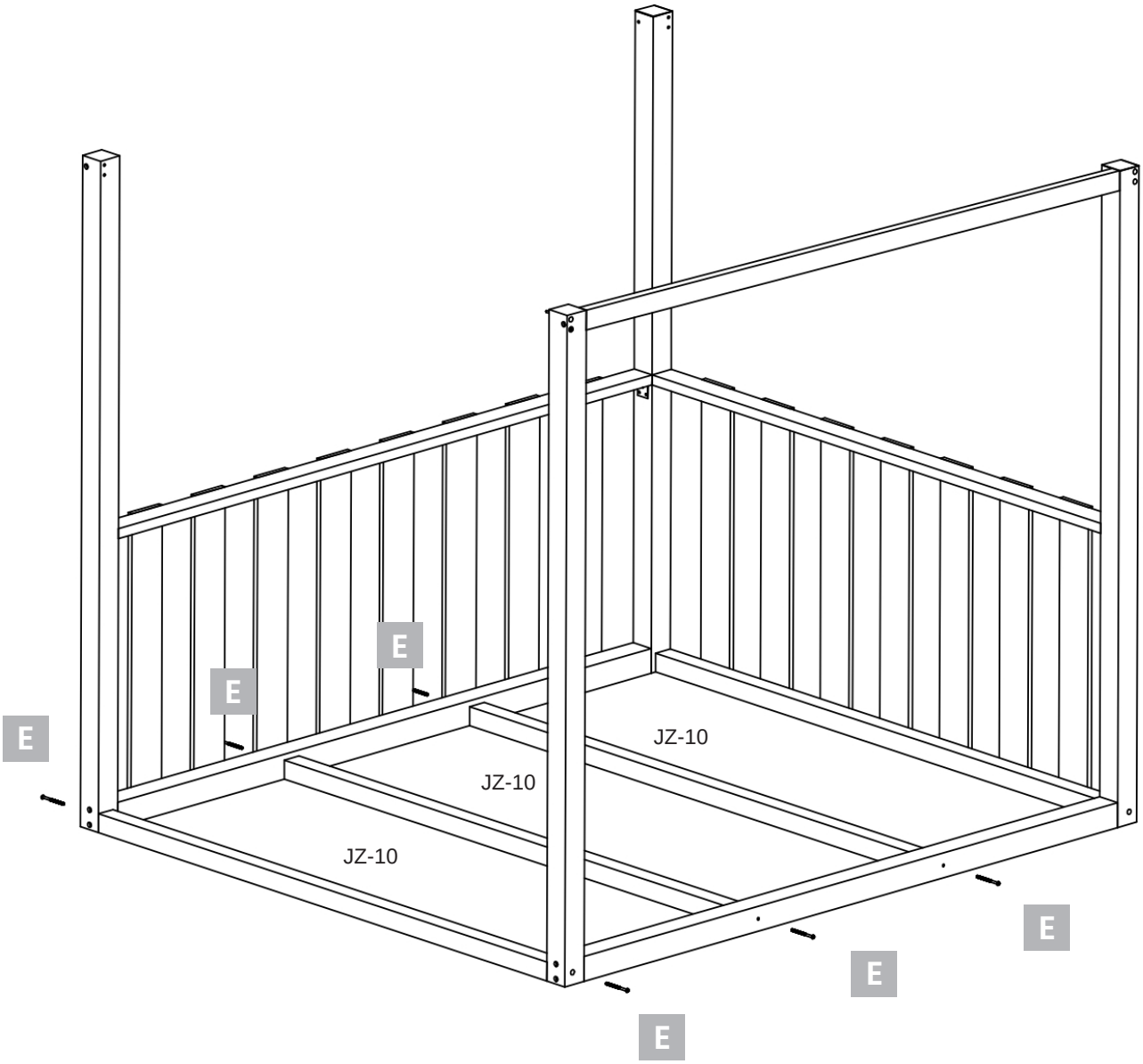

STEP 5

M4x45mm 8pcs

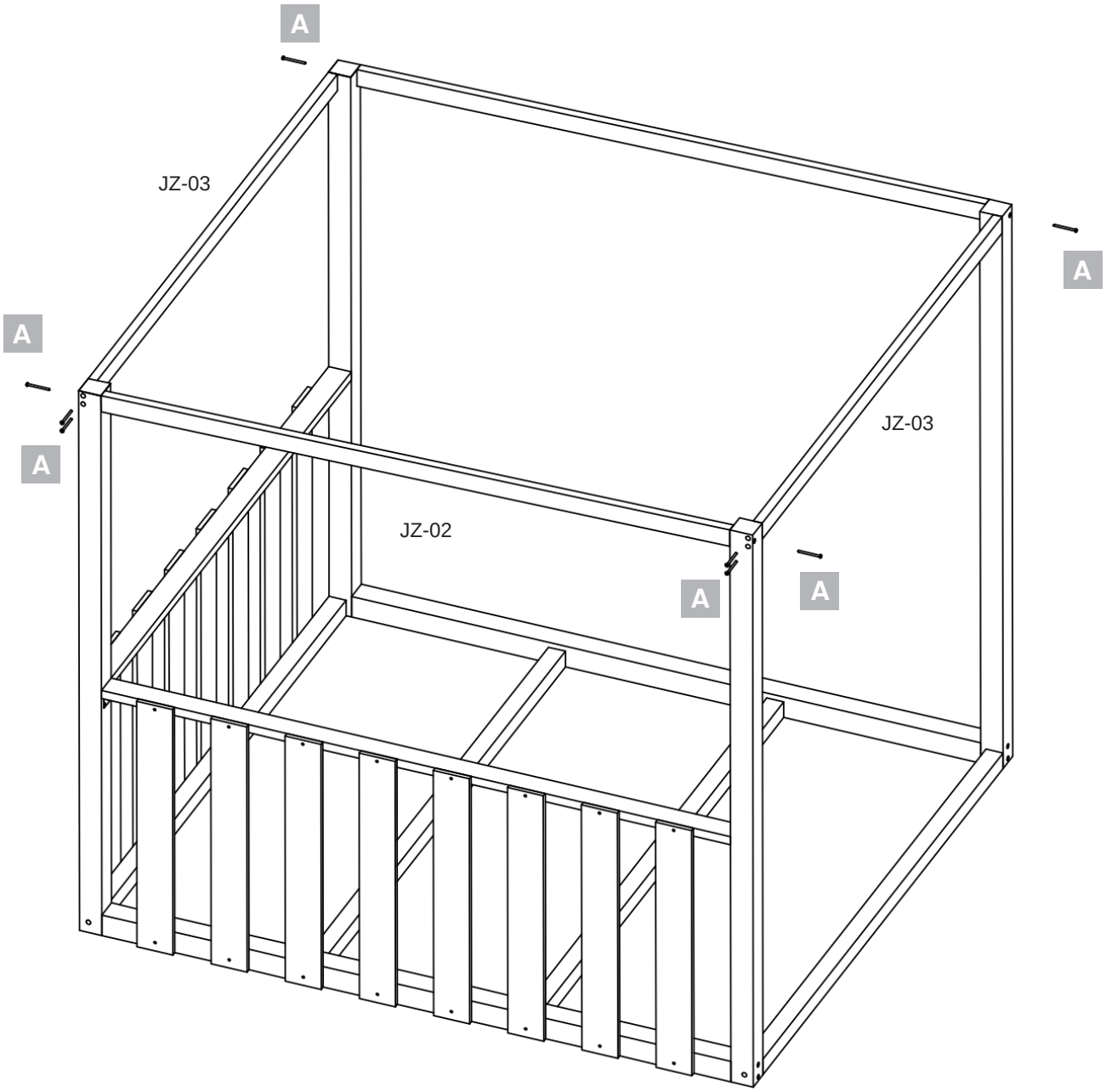

STEP 6

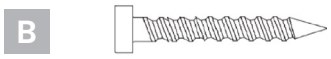

M4X25MM 80pcs

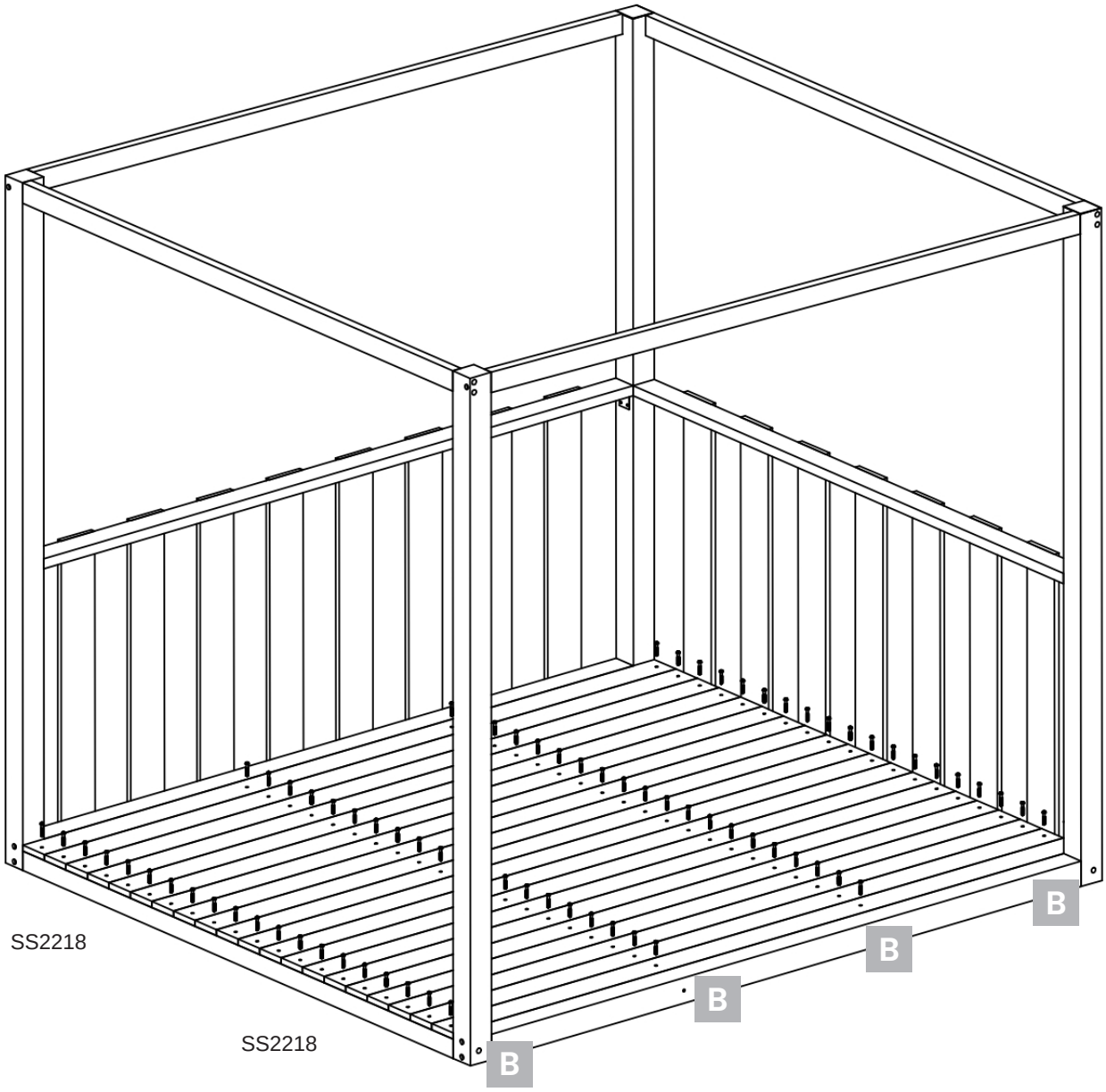

STEP 7

E

M4x60mm 20pcs

F

M4X35MM 8pcs

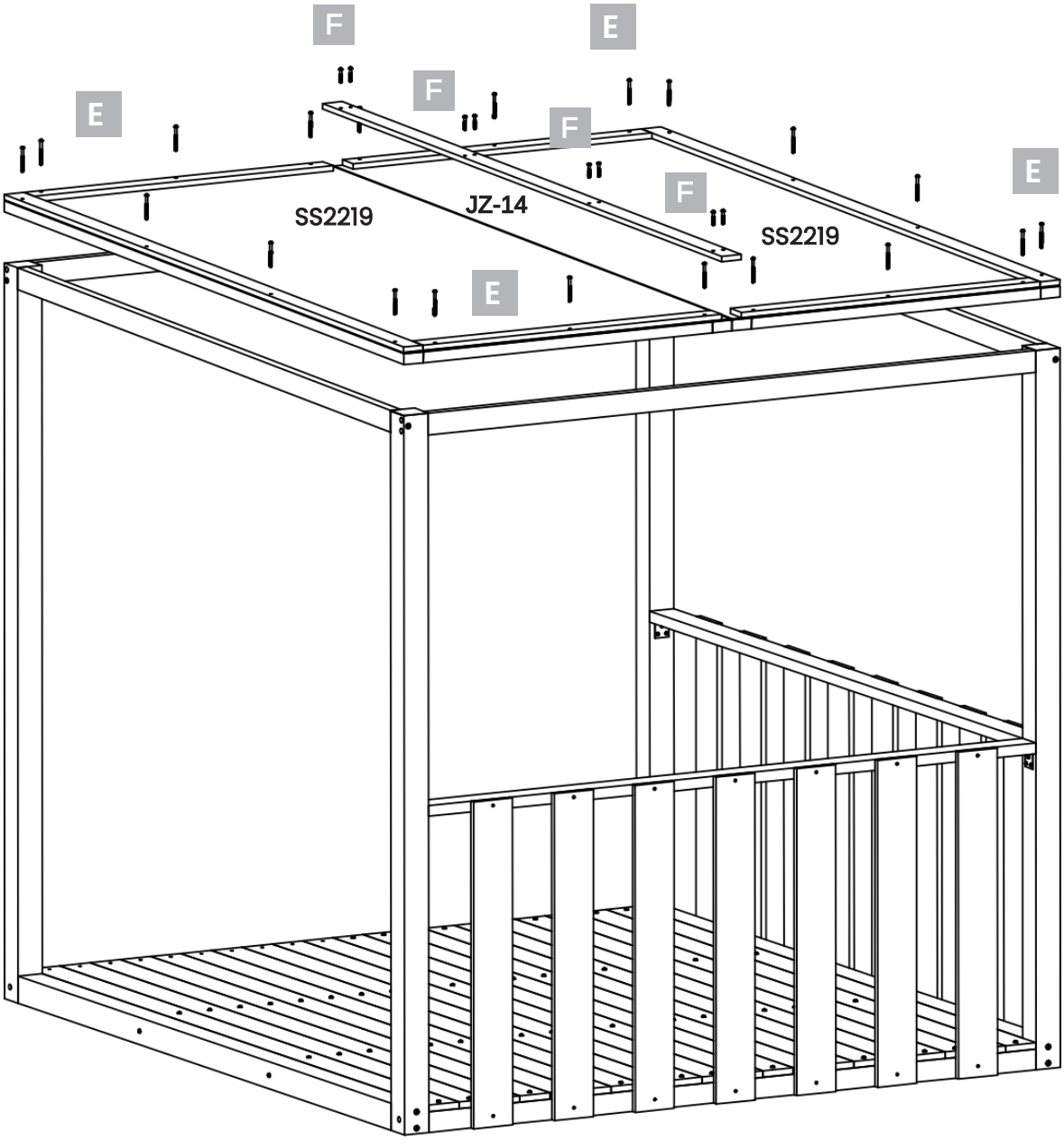

STEP 8

M4x25mm 18pcs

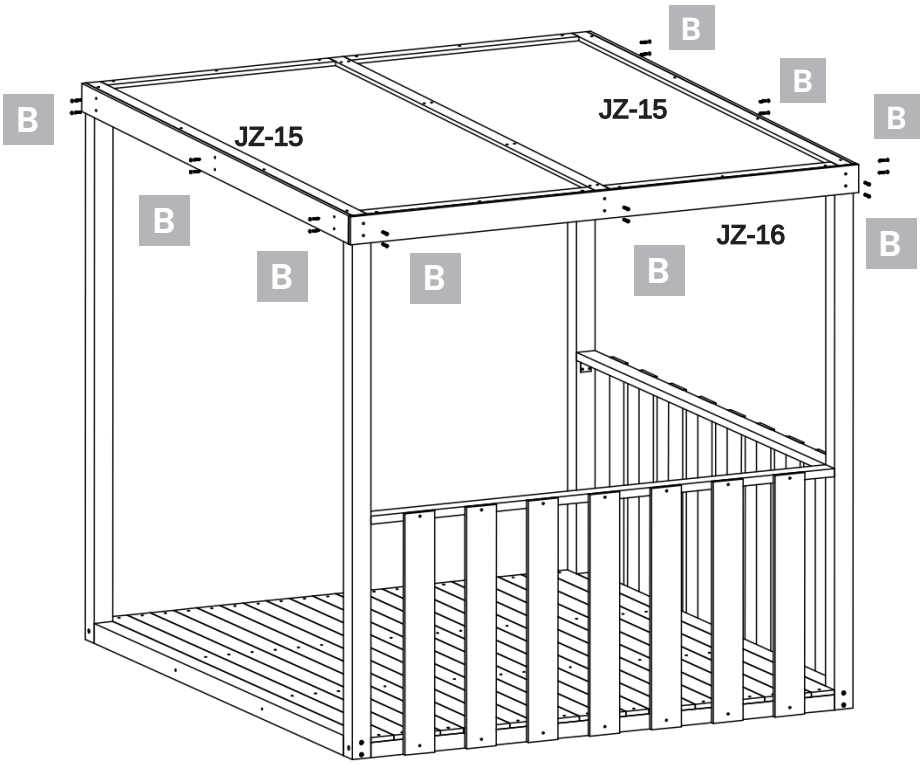

STEP 9

M4x45mm 4pcs

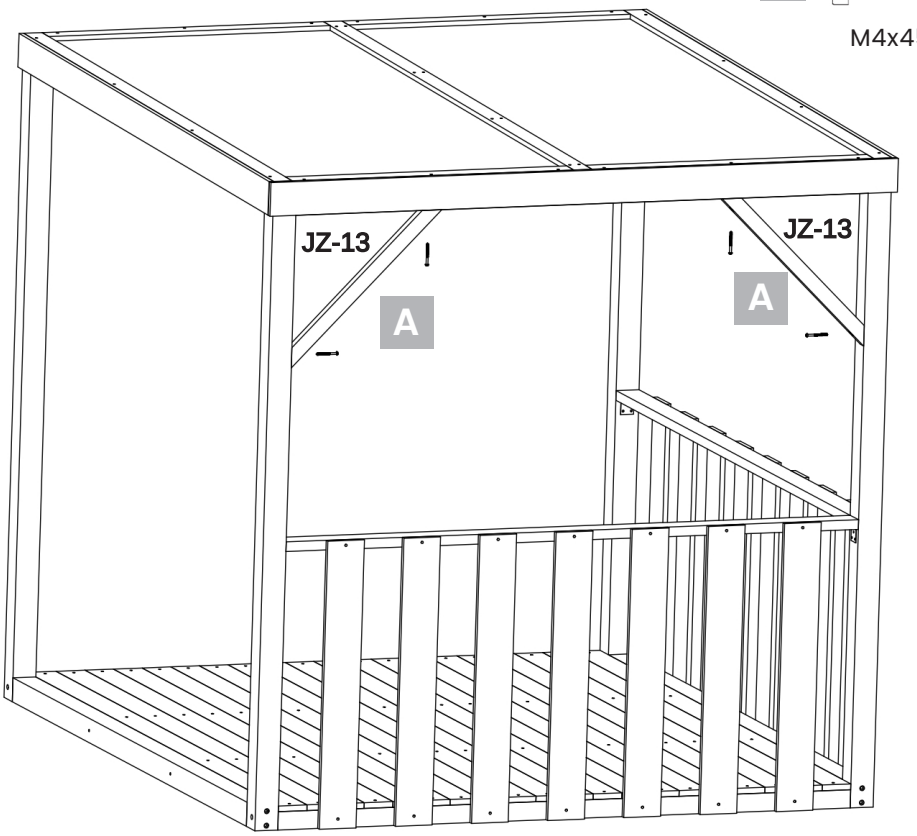

STEP 10

M4x45mm 8pcs

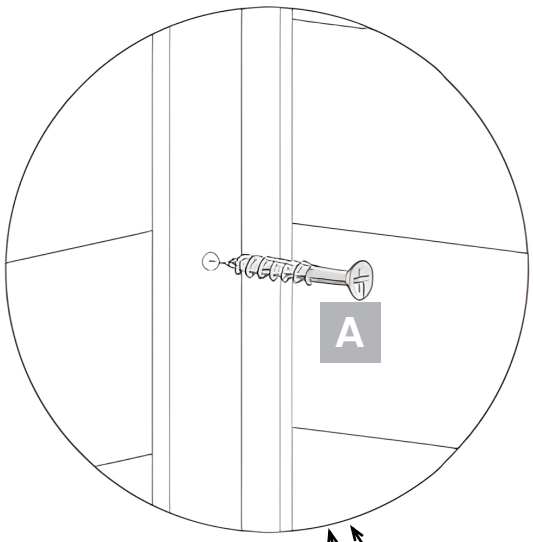

X8

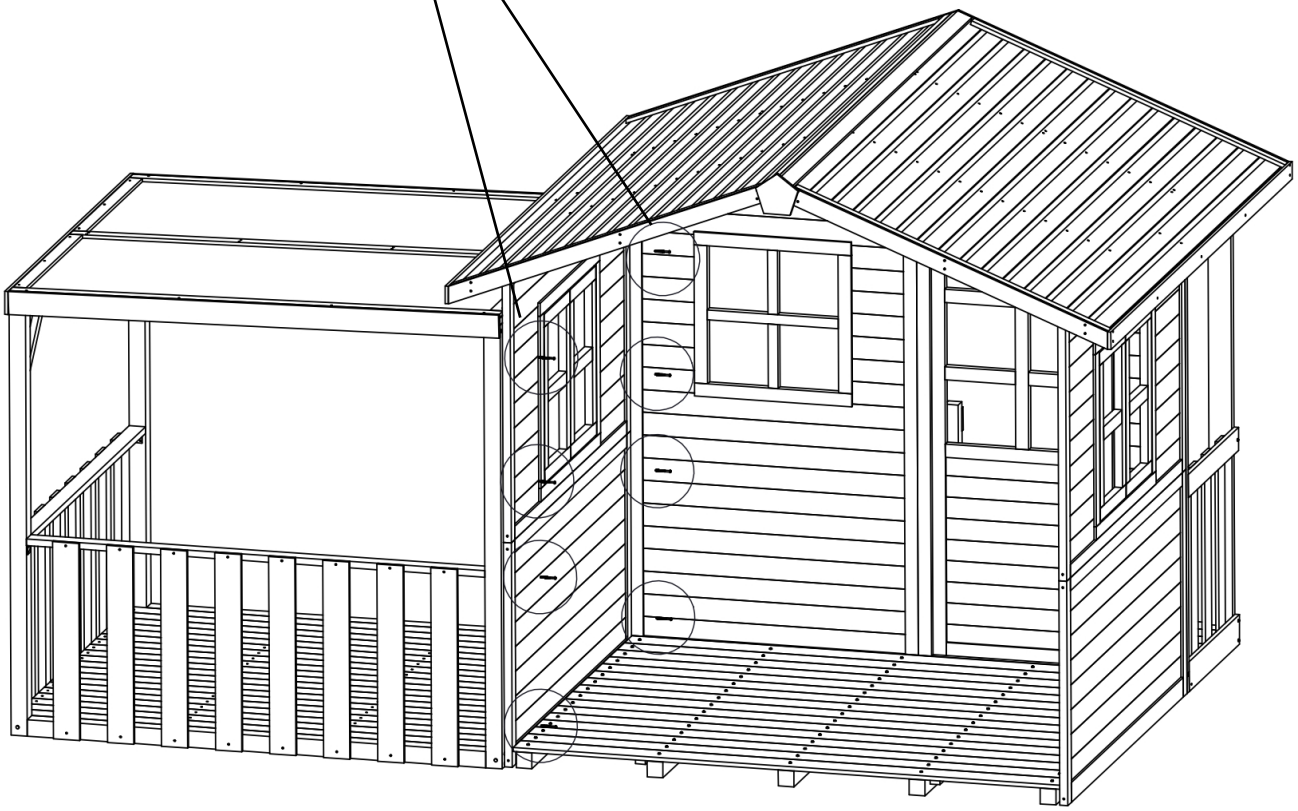

IV. MAINTENANCE

WARNING: Please keep for future reference.

We recommend regular maintenance to be conducted at the beginning of each season as well as at regular intervals during the usage session for your play equipment to ensure all main parts/fixings are tightly secured, well-oiled and intact to avoid failure, injury or hazards.

GENERAL ADVICE

It is of particular importance that this is followed at the beginning of each season as well as at regular intervals during the usage season.

- Check the accessories monthly as well as the play equipment's structure to prevent falling risks.
- Check and retighten screws, bolts, and all other hardware elements as necessary.

    a. Do not over tighten to avoid damaging the thread or cracking the surrounding wood.

- Check all coverings and bolts for sharp edges and replace when required.
- Lubricate all moving metallic parts.
- When signs of oxidation and / or rust appear on various metallic parts of your equipment, sand rusted areas and tubular members and repaint using a non-lead-based paint when required.
- Where applicable: check swing seats, chains, ropes, and other means of attachment for evidence of deterioration.
- Replace when required in accordance with the owner's manual.

If your play structure is disassembled, be sure to clearly mark any attached metal plates to prevent accidents. Check all bolt covers and sharp edges and replace them if necessary.

For longer accessory life, we suggest storing them during the winter.

V. WOOD ADVICE

Our products are manufactured from premium timber. Great care is taking in selecting, machining, and treating the timber before it is sold to you.

1. Inspect wood parts monthly. The grain of the wood sometimes will lift in dry periods causing splinters to appear. Light sanding may be necessary to maintain a safe environment. Treating your Product with protection (sealant) after sanding will help prevent severe checking/splitting and other weather damage.

2. The wood is treated via high temperature drying, degreasing and is stained against wood rot and insect damage (Termites not included). This is not a permanent treatment as weather conditions can wear it down. We recommend once or twice a year, depending on your climate conditions, you must apply some type of protection (sealant) to the wood of your unit. Prior to the application of sealant, lightly sand any "rough" spots on your set. Please note this is a requirement of your warranty.

Bear in mind that timber is a natural product and may experience changes throughout the course of its life. It may:

- Develop openings/checks (gaps, slits, apertures, cracks) along the line of the grain.
- Fade as the timber reacts with sunlight.

All woods are hygroscopic, that is, it will absorb or discharge moisture to attain equilibrium with the surrounding atmosphere. Timber openings/checks occur due to the moisture content between internal and outer surfaces of the timber. No two pieces of wood are exactly alike. Each piece has its own characteristics and personality and reacts differently to climate changes. When any wood products are exposed to the elements, it develops 'wood checks'. A check is the radial separation of the wood fibres running with the grain of the wood. These are caused by the varying temperature and moisture conditions. A check does not affect the strength or durability of the wood or structural integrity of the play set.

WHEN SHOULD WOOD CRACKS BE A CONCERN?

Most of the wood splits will never become large enough to affect the reliability and strength of our products, however, there can be rare cases where splits can occur. This happens when a crack develops past the halfway point from the timber, splitting it into two separate pieces.

Feel free to contact us with detailed pictures of your product so we can assess and ensure that your playground remains safe.

Dimensional timber contains very little heart wood so less splits can be seen.

Round pole Swing sets are very thick that cracks (shownleft) will not affect the strength and durability of our swing sets.

3. Mould and Mildew

Protecting against mould and mildew on your outdoor equipment is an important step in maintaining your backyard. Mould may develop for several reasons, such as certain weather conditions, improper drainage or infrequent usage. Here we'll share our tips for keeping your outdoor areas free of mould and mildew so that you can enjoy your backyard with peace of mind.

Once you spot mould on your equipment, it's important to start clearing it up straight away. The first step is to scrub it off with soap and water, until all the visible signs of mould are removed. It's important to remember however, that just because you can't see it anymore doesn't mean it's gone.
The next step is to kill off the remaining mould so that it doesn't grow back. Here are a few options, but keep in mind these should be used independently. Don't mix or combine these methods at the same time.

Mould Killer or Removal Spray
You can purchase off-the-shelf removal sprays that destroy mould either indoors or outdoors. For these products, make sure to follow the product instructions as well as wearing protective gloves to avoid contact with skin.

Bleach
A solution of bleach and water can also be highly effective in killing mould. For this method, mix the water and bleach on a 1 to 1 ratio, then use a sponge or brush to scrub the affected area. You can also use a higher concentration of bleach for spot treating. After bleach treatment, make sure to rinse off your equipment and allow to dry.

Vinegar
If mould is still lingers after applying bleach or a mould spray, vinegar will be an effective option for removing stubborn remnants. Vinegar will kill most types of mould and is best for nonporous materials like hard plastics or metal. The best method is to fill a spray-bottle with undiluted white vinegar of at least 5% acetic aced. Spray the affected area, then let sit for around an hour. Make sure to thoroughly rinse off afterwards.

For wooden equipment, you can add a coat of paint or stain after it has thoroughly dried.

Some people may find that mould keeps resurfacing after cleaning on certain areas. This can be due to a few reasons, such as poor sunlight. Areas without direct sun are more likely to become damp and take longer to dry off after rain. Consider removing obstacles or rearranging your equipment so that it receives more sunlight, which will also help to kill the mould once it develops.

For more information: *www.lifespankids.com.au/natural-timber*

VI. CLEANING

Do not use any abrasive cleansers for the cleaning. Use a soft, damp cloth to eliminate dirt and dust.

VIII. WARRANTY

AUSTRALIAN CONSUMER LAW

Many of our products come with a guarantee or warranty from the manufacturer. In addition, they come with guarantees that cannot be excluded under the Australian Consumer Law. You are entitled to a replacement or refund for a major failure and compensation for any other reasonably foreseeable loss or damage.

You are entitled to have the goods repaired or replaced if the goods fail to be of acceptable quality and the failure does not amount to a major failure. Full details of your consumer rights may be found at www.consumerlaw.gov.au.

Please visit our website to view our full warranty terms and conditions:
www.lifespankids.com.au/Warranty-Policy-Kids

WARRANTY AND SUPPORT

Any claim against this warranty must be made through your original place of purchase. Proof of purchase is required before a warranty claim may be processed. If you have purchased this product from the Official Lifespan Kids website, please visit www.lifespankids.com.au/warranty-form

For support outside of warranty, if you wish to purchase replacement parts or request a repair or service, please visit www.lifespankids.com.au/warranty-form and fill in our Repair/Service Request Form or Parts Purchase Form.

LIFESPAN KIDS

www.lifespankids.com.au