ACTIVEGO

ACTIVEGO AIRSHOT 4-IN-1 POOL, AIR HOCKEY, TABLE TENNIS TABLE

USER MANUAL

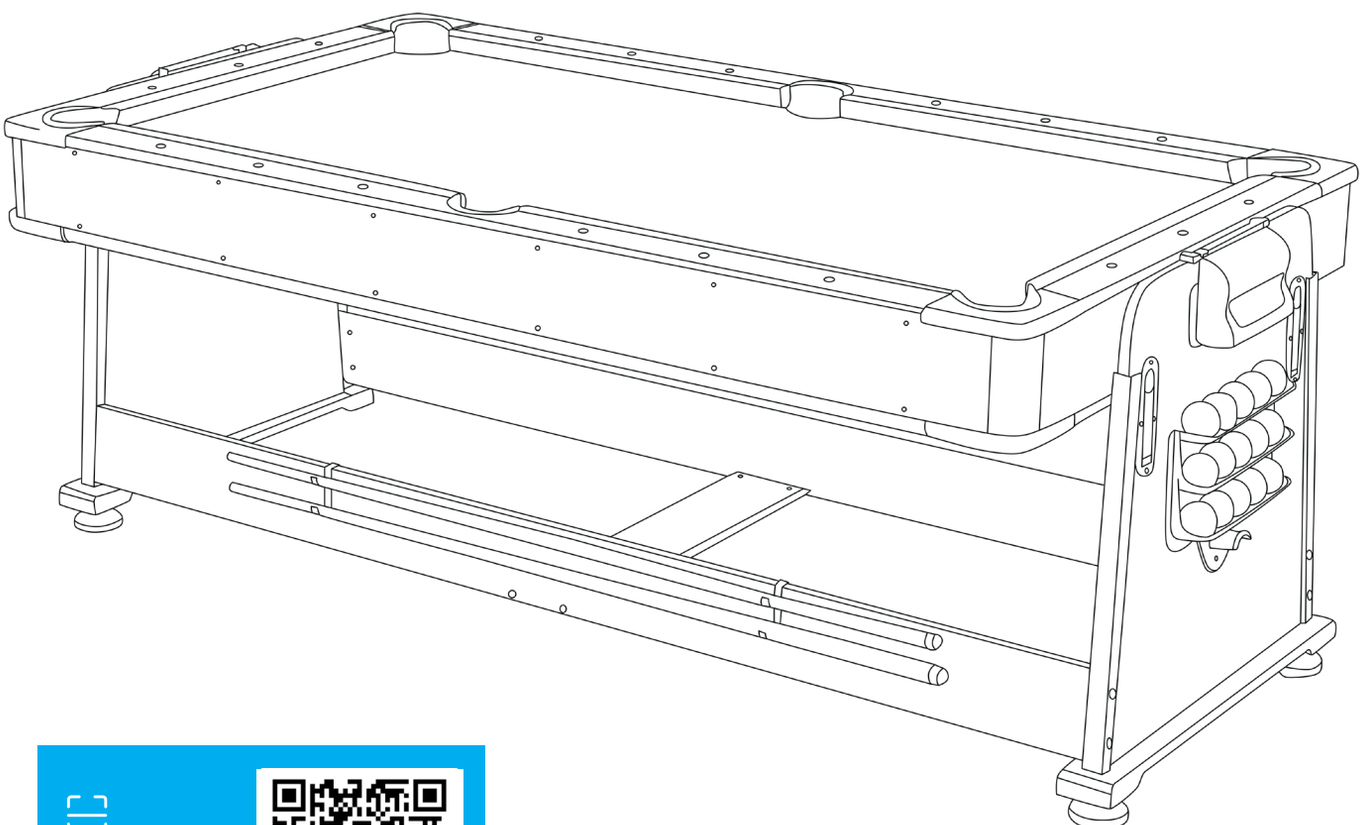

Find the Digital Manual Online

Product may vary slightly from the item pictured due to model upgrades.

Read all instructions carefully before using this product. Retain this owner's manual for future reference.

NOTE:
This manual should not be used to guide your purchasing decision. Your product, and the contents inside its carton, may vary from what is listed in this manual. This manual may also be subject to updates or changes. Updated manuals are available through our website at www.lifespanfitness.com.au

TABLE OF CONTENTS

I. Care, Maintenance and Safety Information 03

II. Parts List Identifier 04

III. Assembly Instructions 05

IV. Using the Table 13

V. Game Rules 13

VI. Warranty 15

I. CARE, MAINTENANCE, AND SAFETY INFORMATION

Intended Use

This pool table is designed for indoor home use only. Exposure to outdoor elements, such as sunlight or moisture, can damage the table's surface and frame.
Caution – this table is not a toy & is intended for use by or under the supervision of adults. Adults should review safety guidelines with children to avoid possible risk of electric shock or other injuries.

Electrical Safety Instructions

1. Power sources – the hockey game should be operated only from 240V AC.
2. The power cable should be routed so that it is not likely to be walked on or pinched by items placed upon or against it.
3. Ventilation – openings in the game are provided for the exhaust air to create a cushion effect. The openings on the air blower are for the intake air. Keep clear of the air blower when it is on. Do not put your hand or other objects near the intake openings. To ensure reliable operation of the game & protect it from overheating these openings must not be blocked or covered.

Safety Instructions

1. Ensure to the table is leveled by adjusting the floor leveler before use.
2. Avoid placing food, drinks, or heavy objects on the playing surface, as spills and weight can damage the felt and impact game quality.
3. Do not sit or stand on the table.

Care and Cleaning

1. Use the supplied brush to dust off the felt playing surface. Avoid using any cleaning agents directly on the felt, as this can degrade the material.
2. Do not use a wet rag on the felt.
3. Do not use abrasive cleaning solutions.
4. Check for loose hardware and re-tighten where necessary.

Storage

Caution: Have 2 or more people to move the table.

When relocating the table, please lift it gently rather than dragging it.
Dragging can damage the legs and stability of the table.

II. PARTS LIST IDENTIFIER

#1. (PRE-Assembled) Pool Table 1 piece	#2. 1/4" Washer 4 pieces	#3. Screw 16 pieces	#4. 5/16" Hex Bolt 8 pieces	#5. 5/16" Washer 8 pieces
#6. Puck Catcher 2 pieces	#7. 1/2" Screw 19 pieces	#8. 1-1/2" Flat Head Screw - 8 pieces	#9. Table Tennis Surface 1 piece	#10. Air Hockey Table Top 1 piece
#11. Barrel Nut 8 pieces	#12. Pedestal 2 pieces	#13. Pedestal Support 2 pieces	#14. Side Rails 2 pieces	#15. 1-1/4" Screw 18 pieces
#16. Table Tennis Paddle 2 pieces	#17 Pusher 2 pieces	#18. Puck 2 pieces	#19. Billiard Balls 1 set	#20. 2/Pcs Cue Stick 2 pieces
#21. Table Brush 1 piece	#22. Triangle Rack 1 piece	#23. Cue Chalk 2 pieces	#24. Latches 4 pieces	#25. Plastic Tray A 1 piece
#26. Plastic Tray B 1 piece	#27. Leg Leveler 4 pieces	#28. Table Tennis Net 1 Set	#29. Table Tennis Ball 3 pieces	#30. Allen Key Tool 1 piece
#31. Cue Holder 2 piece	#32. (Pre-Assembled) Rotational Bolt 2 piece	#33. 1/4" Bolt 4 pieces	#34. 1/4" Barrel Nut 4 pieces	#35. Rail A 1 piece
#36. (Pre-Assembled) Hockey Fan Motor 1 piece	#37. Plug Adapter 1 piece	Please note that the reverse side of the Table Tennis Top #9 is also the protective lid for this table when not in use. If still attached, peel off the protective paper film to reveal the black exterior finish.		

III. ASSEMBLY INSTRUCTIONS

Tools Required

Philips Screwdriver – not included
Standard (flat head) Screwdriver – not included
Allen Key – included

Note: Electric screwdrivers may be helpful during assembly however please set a low torque and use with extreme caution. Some steps require you to first hand tighten first. DO NOT OVER TIGHTEN THE SCREWS.

Assembly Tips

Make sure you understand the following before you begin to assemble your games table.

1. READ THIS MANUAL all the way through before beginning assembly.
2. Some drawings or images in the manual may not look exactly like your product.
3. You will need a second adult to assist with this assembly (ideally 4 adults needed for lifting).
4. Save all packing materials until the parts have been inspected & the table is assembled. blocked or covered.

Unpack the pieces

Make sure you understand the following before you begin to assemble your games table.

1. Lay the box on a flat surface (the floor). You may want this near your area of assembly.
2. Unpack the boxes & parts bags. Inspect & count the parts. The Parts Identifier page can be used to record your results.
3. Some parts on the Parts Identifier page are pre-assembled.
4. If any parts are missing please contact your place of purchase immediately.
5. Note that some parts are stored inside the table top.

STEP 1

1. Lift the air hockey top off the pool table & lay aside somewhere safe for now. Either carefully lay it on the floor or up against a wall. Be careful not to damage the air hockey fan motor.
2. Remove all accessories & boxes from inside the pool table top.
3. Now replace the air hockey top back onto the pool table & at the same time thread the fan motor cable through the hole in the side of the table. Be careful not to pinch the cable.
4. Use #15 screws to attach both the air hockey & pool tops together in the marked places around the sides of the table – see diagram below:

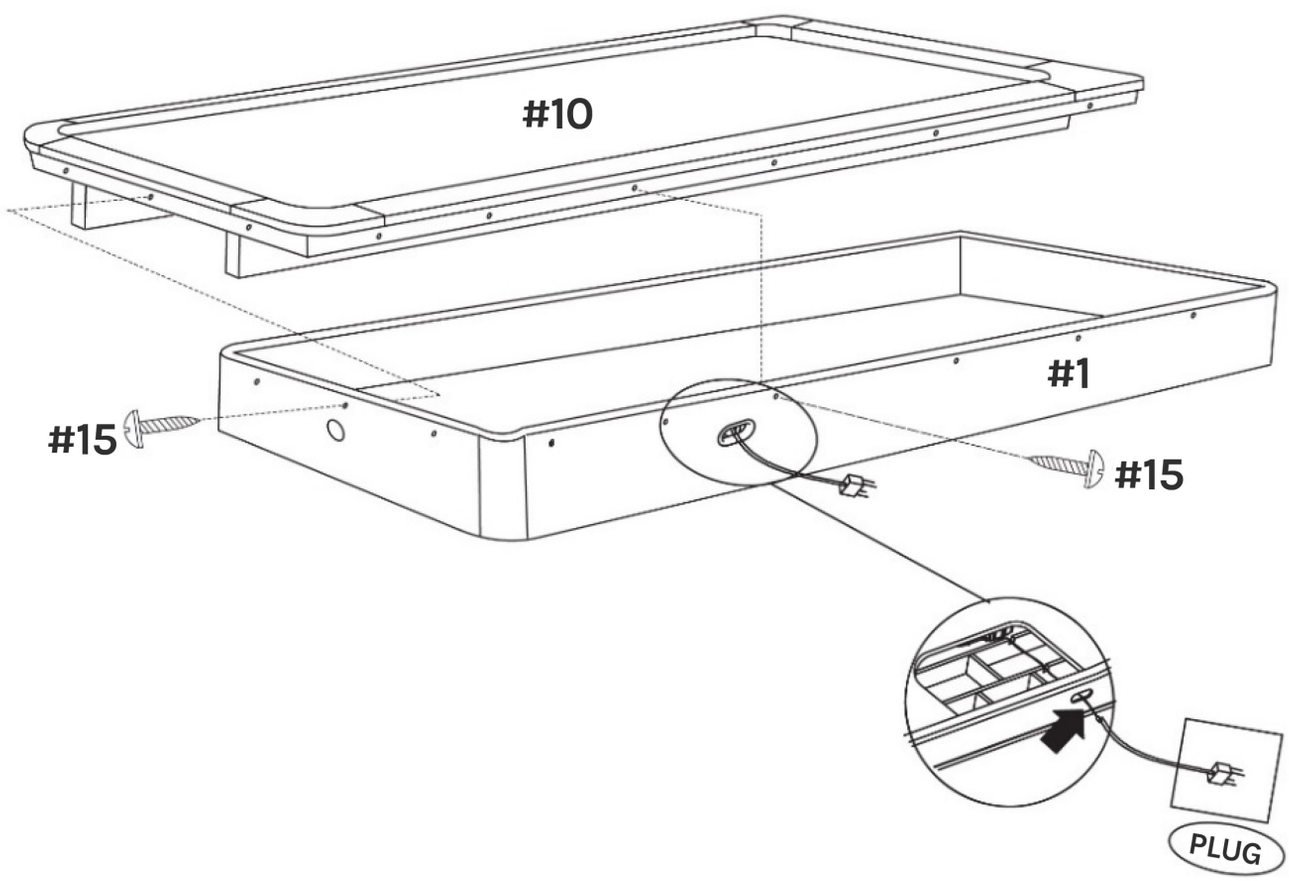

STEP 2

5. Screw the four leg levellers #27 into the two pedestal supports #13.
6. Next place the two pedestals #12 into the recess of the two pedestal supports #13 & secure them with screws #8 – see diagram below:

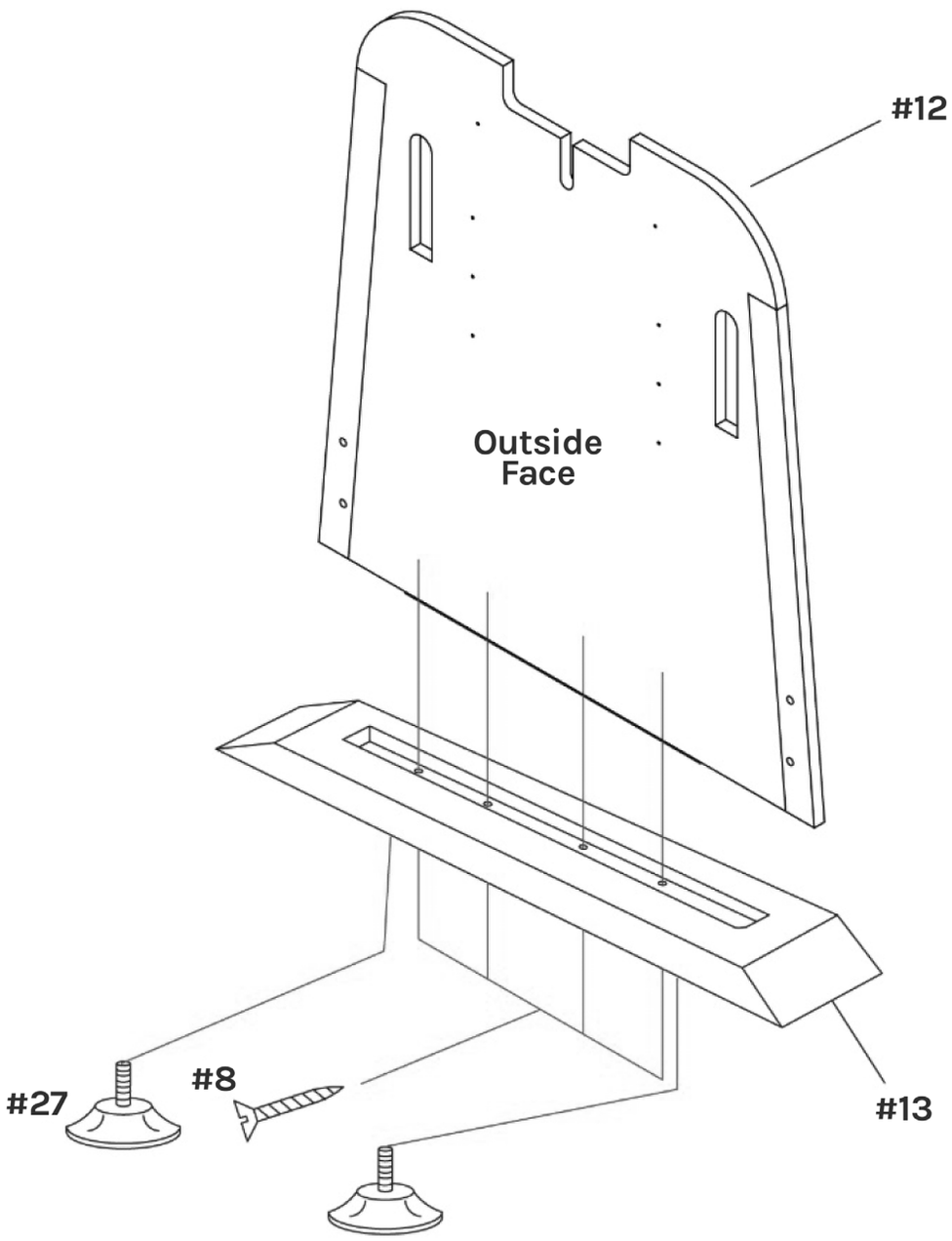

STEP 3

7. Attach the two latches #24 to the outside of each pedestal using screws #3.
8. Important – to ensure the latches are attached in identical positions around the leg platform please make sure each latch is seated firmly on the bottom of the latch-receiving slot. See diagram below:

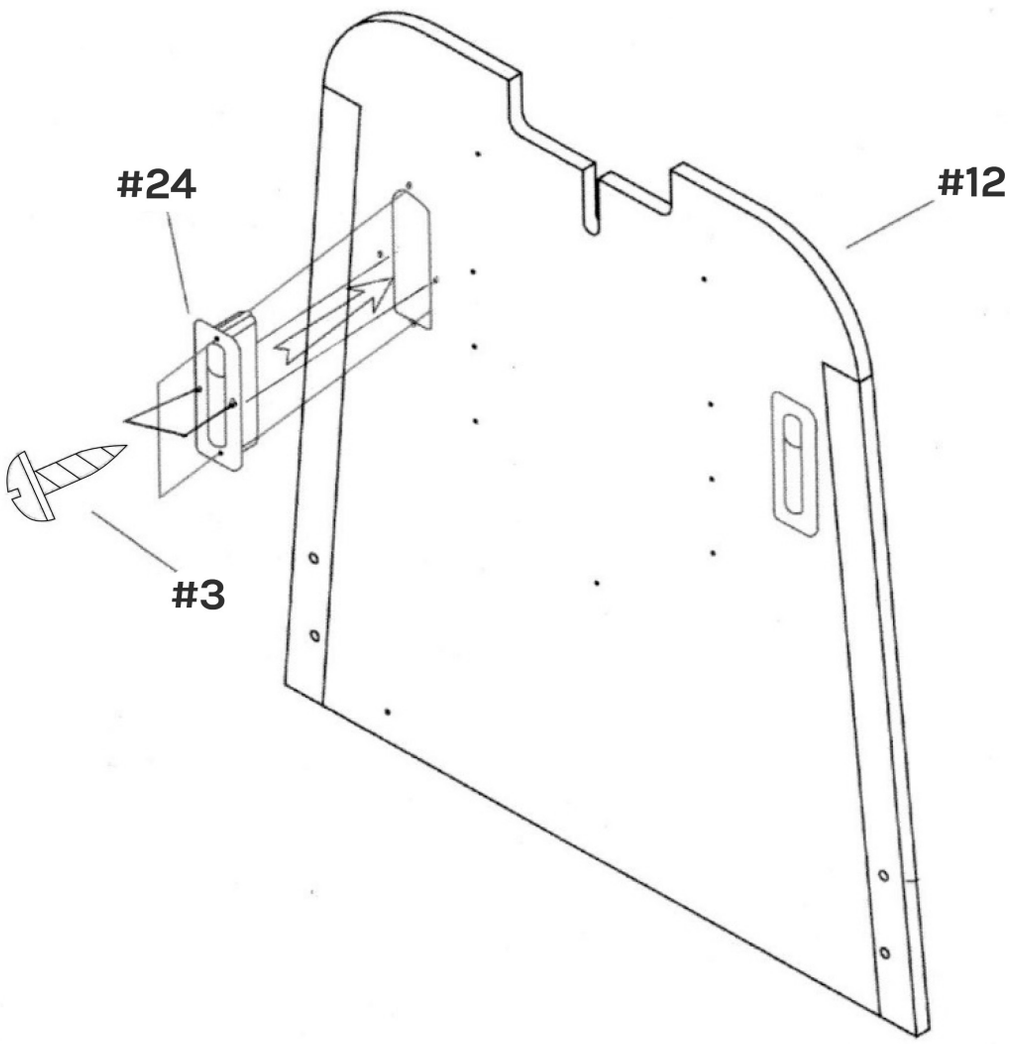

STEP 4

9. Attach the two side rails #14 to the inside of the two pedestals #12 using the #11 barrel nuts, #4 hex bolts & #5 washers. Hand tighten only at this stage.
10. Attach rail A #35 to both side rails #14 using #2 washers, #33 bolts & #34 barrel nuts.
11. Hang the two #31 pool cue holders over one of the #14 side rails.
12. Do not tighten the fixings at this point. See diagram below:

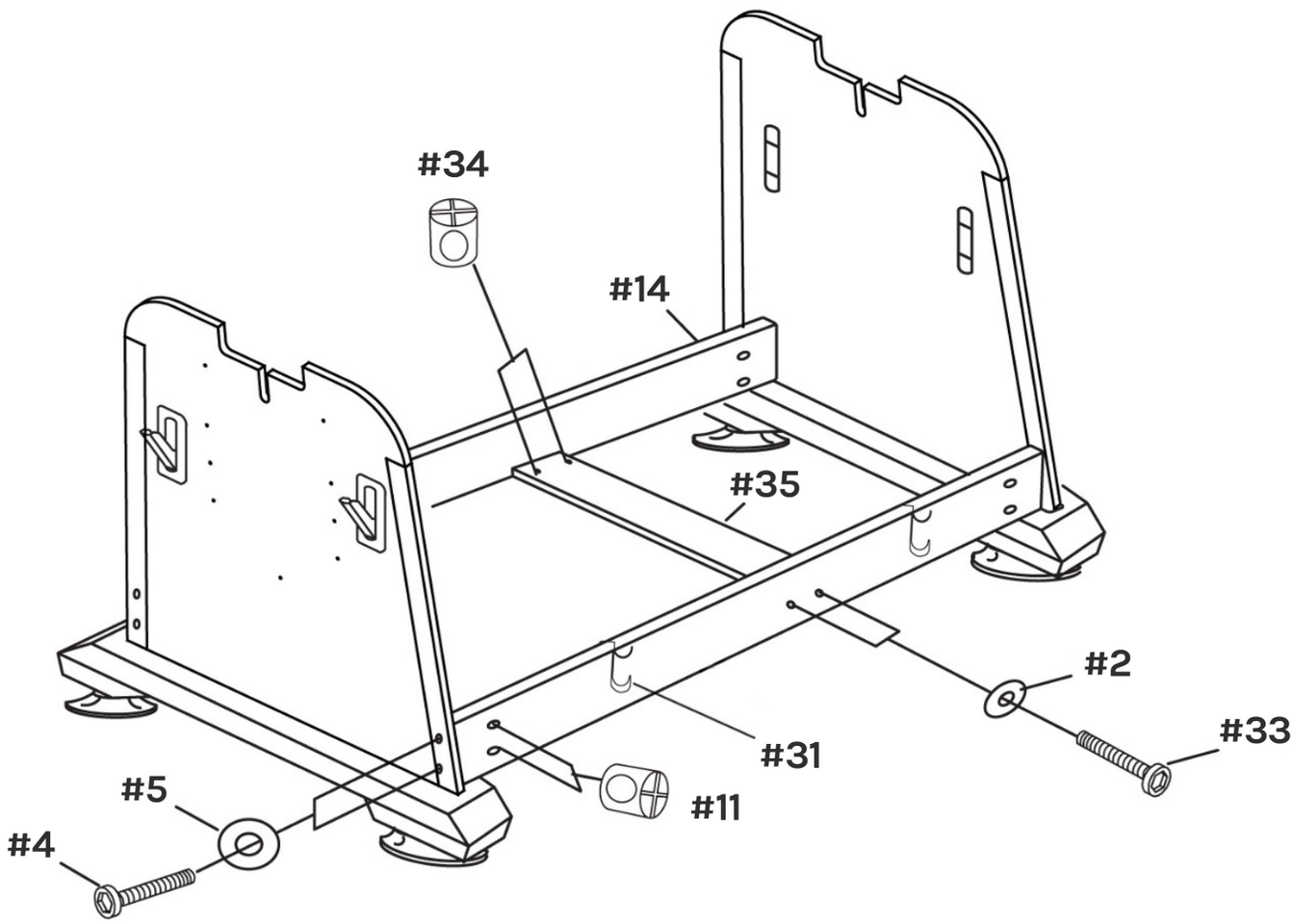

STEP 5

13. Place the complete table top onto the leg assembly. Ideally this requires four adults each lifting one corner of the table top, then carefully lowering it onto the leg assembly ensuring both rotational bolts #32 slot into the groove in the top of the two pedestals #12.
14. Important: before lifting the table top make sure the rotational bolts are unscrewed wide enough to just fit into the groove on top of the pedestals. Do not over-unscrew.

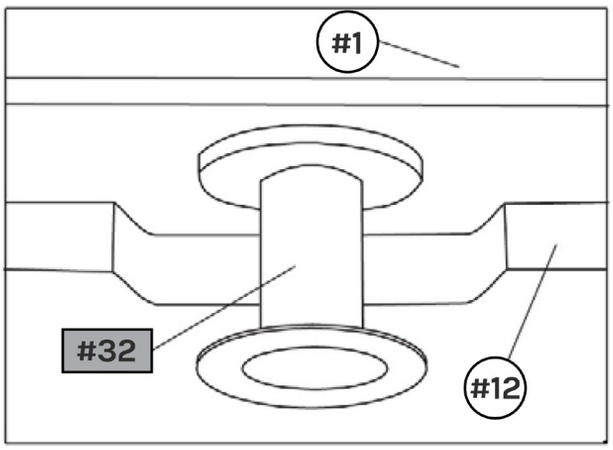

15. Firmly tighten all nuts & bolts on the leg assembly which were left only hand-tightened in Step 4. See diagram below:

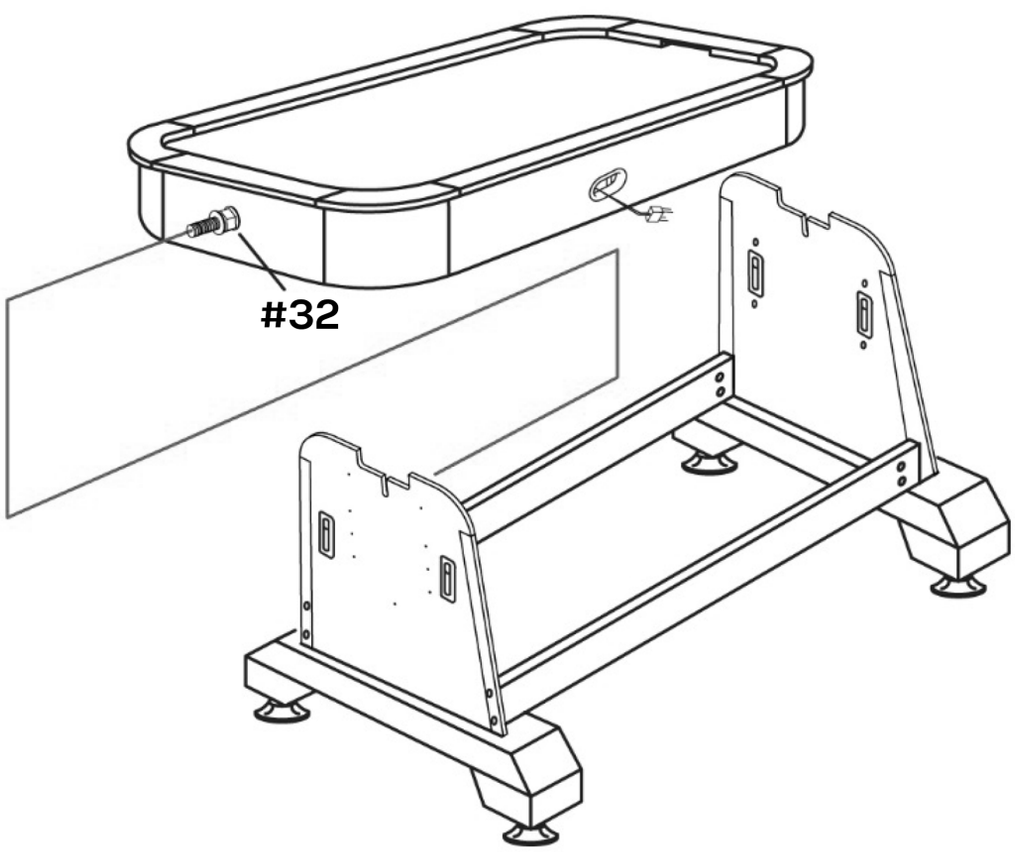

STEP 6

16. Now attach the two puck catchers #6 to the outside of both pedestals using screws #7.
17. Plastic tray A #25 & plastic tray B #26 can also be screwed to the outside of the pedestals using screws #7. The holes have already been pre-drilled to show which end the different trays should be placed. See diagram below:

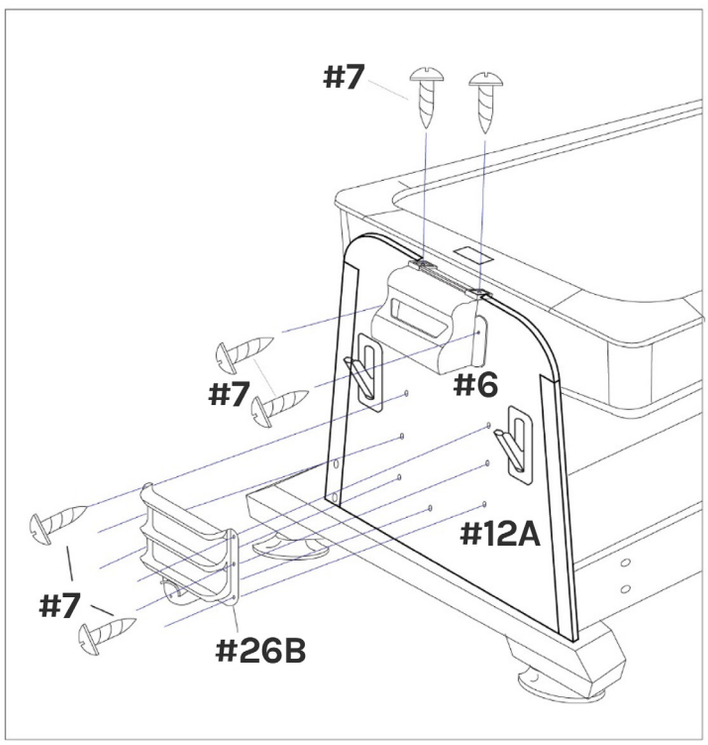

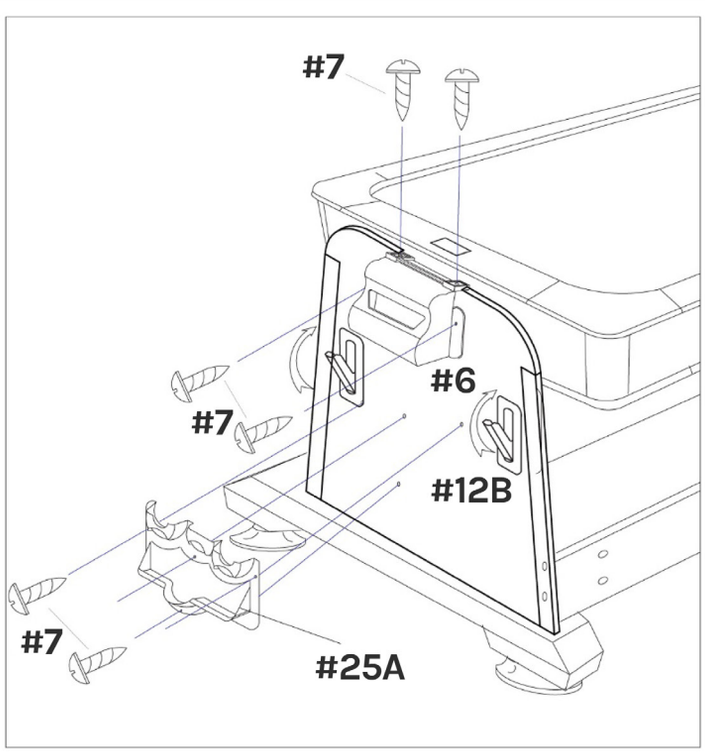

STEP 7

18. Lay the table tennis pitch #9 onto the table top & attach the net by sliding parts #28 onto the side of the pitch – see diagram below. If still attached, peel off the protective paper film from the reverse side of the table tennis pitch to reveal the black exterior finish.

    NOTE: The reverse side of the table tennis top is also the protective lid for this table when not in use.

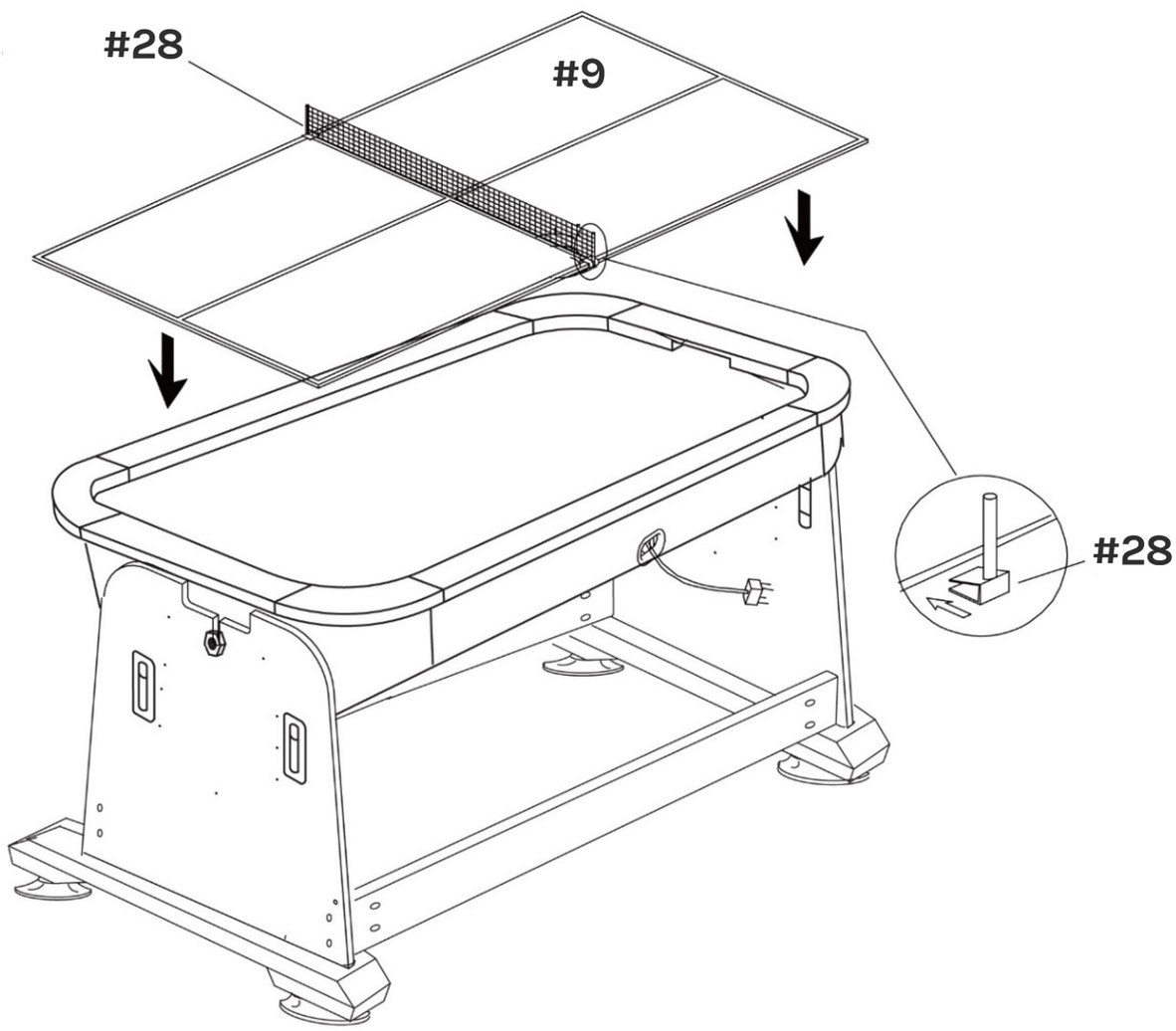

IV. USING THE TABLE

To rotate the table

Caution – this should only be performed by an adult as the rotating table may pinch body parts if not careful.

- Pull out the two table latches on both ends.
- Slowly rotate the table. If the edge of the table top catches on any part of the leg assembly when rotating then a small adjustment will need to be made to the leg assembly to make it square to the table top. Do this by lifting one leg off the floor at a time & by applying pressure to rotate the frame slightly so that it is more square to the table top.
- If the pool table side is not level then first try to rectify this by using the leg levellers on each leg. Much of the table can easily be levelled using this method.
- Push the table latches back in.
- Note that the table top cannot be rotated if the table tennis pitch is being stored underneath by resting it on the side rails. It must be removed first before rotation & can be replaced afterwards.

If the fan does not work

Check the toggle switch on the cable is pressed on. Alternatively check the fuse in the plug top.

V. GAME RULES

Air Hockey

The object of the game is to be the first player to score 10 goals against the opponent. A coin toss is used to determine which player starts with the puck (serve). The player winning the coin toss gets the puck & begins play by striking the puck with their pusher onto the opponent's side. Players can strike the puck anywhere on their half of the playing surface. Players cannot cross the centreline to strike the puck. If a goal is scored when a player strikes the puck over the centreline it does not count.

A player may stand anywhere around the table on their side of the centreline. Players may not stand past that line. When the puck contacts any part of the centreline either player may strike the puck to score. A goal is scored when the puck enters & drops inside the opponent's goal.

The player scored upon receives possession of the puck for the next serve. If the puck stops in the goal & has tilted into the goal drop it counts as a goal. If the puck stops in the goal & has not tilted into the goal, it does not count as a goal. Players can remove the puck out of the goal with their hands or pusher. If the puck rebounds out of the goal the point does not count. The first player to score 10 points is declared the winner.

Pool (8-Ball)

All 15 balls are racked with the 8-ball in the middle (many players also alternate stripes & solids at the end of the bottom row). The balls are broken wide open. No matter what happens on the break the shooter still has their choice of playing stripes or solids. The first player to sink a striped or solid ball is committed to those balls for the remainder of the game. After a player has pocketed all their stripes or solid balls they may shoot at the 8 ball. The shooter must call the pocket for the 8 ball. If they miss the game continues. Once the 8 ball is legally pocketed a winner is declared.

Table Tennis

Opponents flip a coin & the winner may choose either end of the table or the right to serve or receive first. If they choose an end at which to play the other player has the choice of serving or receiving first. Each match shall consist of the best two out of three games with the winning player reaching 21 points first or being ahead by two after the score reaches 20 all in each game.

The serve changes from one player to the other every time five points are scored, except when the score becomes tied 20-20. At this time the serve changes & continues to change after each point until one player scores two consecutive points, thus winning the game.

The serve must be made from behind the end line. The server puts the ball into play by tossing it into the air from the palm of one hand & striking it with the paddle (held in the other hand) so that it hits their own court. The ball must go over the net & hit the receiver's court. The receiver must return the ball over the net so that it hits the server's court. Play continues until one player fails to make a legal return. The opponent then scores a point.

ENVIRONMENTAL PROTECTION

Waste electrical products should not be disposed of with household waste.
Please recycle where facilities exist. Check with your Local Authority or retailer for recycling advice.

VI. WARRANTY

AUSTRALIAN CONSUMER LAW

Many of our products come with a guarantee or warranty from the manufacturer. In addition, they come with guarantees that cannot be excluded under the Australian Consumer Law. You are entitled to a replacement or refund for a major failure and compensation for any other reasonably foreseeable loss or damage.

You are entitled to have the goods repaired or replaced if the goods fail to be of acceptable quality and the failure does not amount to a major failure. Full details of your consumer rights may be found at **www.consumerlaw.gov.au**.

Please visit our website to view our full warranty terms and conditions:
http://www.lifespanfitness.com.au/warranty-repairs

WARRANTY AND SUPPORT

Any claim against this warranty must be made through your original place of purchase.
Proof of purchase is required before a warranty claim may be processed.

If you have purchased this product from the Official Lifespan Fitness website, please visit
https://lifespanfitness.com.au/warranty-form

For support outside of warranty, if you wish to purchase replacement parts or request a repair or service, please visit h**ttps://lifespanfitness.com.au/warranty-form** and fill in our Repair/Service Request Form or Parts Purchase Form.

Scan this QR code with your device to go to **lifespanfitness.com.au/warranty-form**

ACTIVEGO

WWW.ACTIVEGO.COM.AU