PROGEAR

BROOKLYN URBAN 650B STREET HYBRID BIKE

OWNER'S MANUAL

ONLY TO BE ASSEMBLED BY A SKILLED BICYCLE MECHANIC.

Read all instructions carefully before using this product. Retain this owner's manual for future reference.

TABLE OF CONTENTS

I. IMPORTANT SAFETY INSTRUCTIONS - 3

II. OWNER'S INFORMATION AND RESPONSIBILITY - 4

You should read this manual - 4

Owner's information and responsibility - 4

What kind of bicycle is it? - 5

Section 1: Safety Precautions

1.1 Fitting your bicycle for a safe ride - 7

1.2 Safety check before riding your bicycle - 9

1.3 Safety equipment and sensible riding - 11

Section 2: Service and Basic Maintenance

2.1 Maintaining your bicycle - 14

2.2 Monthly service chart - 15

Section 3: Helpful hints, Special Instructions and Warranty

3.1 About your bicycle retailer - 18

3.2 Special instructions for care of carbon fibre bicycles - 18

3.3 Tools and bicycle assembly - 18

3.4 Lock your bicycle - 20

3.5 Keep a record of your bicycle - 21

Troubleshooting chart - 24

Bicycle record chart - 25

III. BICYCLE ASSEMBLY INSTRUCTIONS - 26

IV. WARRANTY - 33

I. IMPORTANT SAFETY INSTRUCTIONS

Failure to obey all of the warnings and instructions contained in this manual may result in serious injury, or permanent damage to your bike.

- Always wear a properly fitted and fastened helmet when riding. This is required by law in most states and is an important safety precaution. Failure to wear an approved safety helmet can result in severe injury or death.
- Check your helmet for proper fit and damage before each ride.
- Always obey all traffic laws.
- The purchaser, owner, and/or riders of this cargo bike are directly responsible for knowing and obeying all local, state and federal laws regarding the riding and use of this cargo bike.
- Always ride cautiously, maintaining complete control and a reasonable speed (<20km/h).
- The rider should hold the handlebars and stop before getting on or off.
- Sitting securely when riding.
- Slow down the speed to 10km/h or less before turning the corner, in order to avoid rolling over.
- This bike is not suitable for stunt riding, jumping, competition, or racing.
- Always check that brakes are functioning properly before each ride.
- Only one rider at a time.
- Do not ride at night or in conditions when visibility is impaired, unless you install head lights and tail lights that make you visible to all pedestrians and vehicles.
- Wet weather significantly detracts from brake performance. Always allow a longer distance for safely stopping in the rain, or on a wet or icy road surface.
- This product should not be used by minors without adult supervision.
- Do not modify the bike
- Do not tow or pull with the cargo bike. Do not allow the bike to be towed or pulled.
- Keep fingers away from moving parts and chain.
- Always park in right place.
- Avoid high speed sharp turns, as your bike may tip over.
- Always apply even pressure to both brakes when stopping.
- Some localities require that the owner or rider equip their bike with a horn, bell, or other sound making device to use for warning others of your approach.
- Check handlebar and seat adjustments before riding.
- Check your tires for cuts, exposed casing, casing cords, and proper inflation before each ride.
- Ensure you wear safe footwear and keep loose articles of clothing clear of moving parts on your E-Bike while riding.

YOU SHOULD READ THIS MANUAL

Your bicycle is legally a vehicle. It can be ridden on roads mixing with other traffic. You need to know about certain legal and common sense requirements for the enjoyable, safe and trouble free use of your bicycle.

II. OWNER'S INFORMATION AND RESPONSIBILITY

To reduce the risk of serious personal injury, you should read the instructions in this manual carefully.

There are **warnings** throughout this manual. Follow all warning instructions. Don't risk injury, mechanical failure or damage.

If your bicycle has been supplied in a form not ready for use you must obtain "assembly instructions" from your supplier.

Know how to operate all standard and accessory equipment on the bicycle.

Ensure that anyone who uses the bicycle has been fully instructed in the operation of bicycle functions.

Your bicycle conforms to relevant Australian Standards. Other local regulations may apply. Check with your bicycle retailer.

Many bicycle product manufacturers and suppliers provide additional information on Web sites.

The Bicycle Industry in Australia Web site includes many useful links and other information at: www.bikeoz.com.au

The Cycling Promotion Fund offers helpful hints and links at: **www.rideabike.com.au**

WHAT KIND OF BICYCLE IS IT?

Bicycles can be broadly categorised into four types:

- Road or Touring
- Mountain or Off Road
- Cross, Hybrid, City or Comfort and BMX
- Freestyle

Bicycles for younger riders use are generally scaled down versions of adult bicycles including the step through design. Other bicycles include tandems, recumbents and folding bicycles. Which type is your new bicycle?

ROAD OR TOURING

Typically has narrow tyres and drop handlebar.

Variations include bicycles suited for touring, commuting, sports, and recreational riding.

MOUNTAIN OR OFF ROAD

The Mountain Bicycle is designed to give the rider maximum control and durability on a wide variety of harsh terrain. Everything about the Mountain Bicycle is more rugged. Its frame geometry provides maximum ground clearance and allows you to quickly and easily shift your weight to change the balance of the bicycle as terrain conditions demand.

WARNING: Not all Mountain type bicycles are intended for off road or competition use. Check specifications and technical advice from your bicycle retailer before use.

CROSS, HYBRID, CITY OR COMFORT

Usually something of a mixture of characteristics of the Road and Mountain types but may include evolving frame shapes and components. Suited for general purpose riding.

BMX

BMX, are general purpose bicycles for younger riders.

The BMX type Bicycle is a versatile machine usually of 20” (510mm) or less sized wheels with wide section tyres, ideal for general purpose use by younger riders.

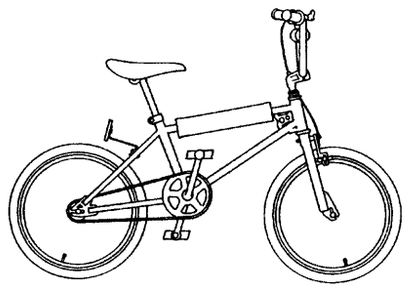

WARNING: General purpose Freestyle and BMX bicycles are not designed for stunting, racing or competition use.

FREESTYLE

Modelled on a trick riding style machine, featuring 360 degree revolving handlebar/fork assembly, axle pegs and wide profile tyres. Using a freestyle type bicycle for trick or competition riding may void warranty.

POWER ASSISTED BICYCLES

Have characteristics and equipment which may require special instruction, adjustment, care and maintenance. Read carefully all instruction manuals. Ask your bicycle retailer for advice on maintenance, adjustments and repair.

Unauthorised work may limit or void the warranty.

FOLDING BICYCLES

Designed for easy storage. May require special instruction before use. Ensure that all locking devices are correctly secured before riding a Folding bicycle.

WHAT IS IT CALLED?

Although bicycle components vary in design, weight and method of use, basically all bicycles are the same.

A bicycle is made up of a frame, wheels, drive train, brakes, stem, handle bars and saddle. Frames must show a makers ID label.

Familiarise yourself with the bicycle's terminology; it will make basic maintenance instructions much easier to follow.

TYPICAL PARTS OF A BICYCLE

NOTE: Not all components nor all bicycle types are shown.

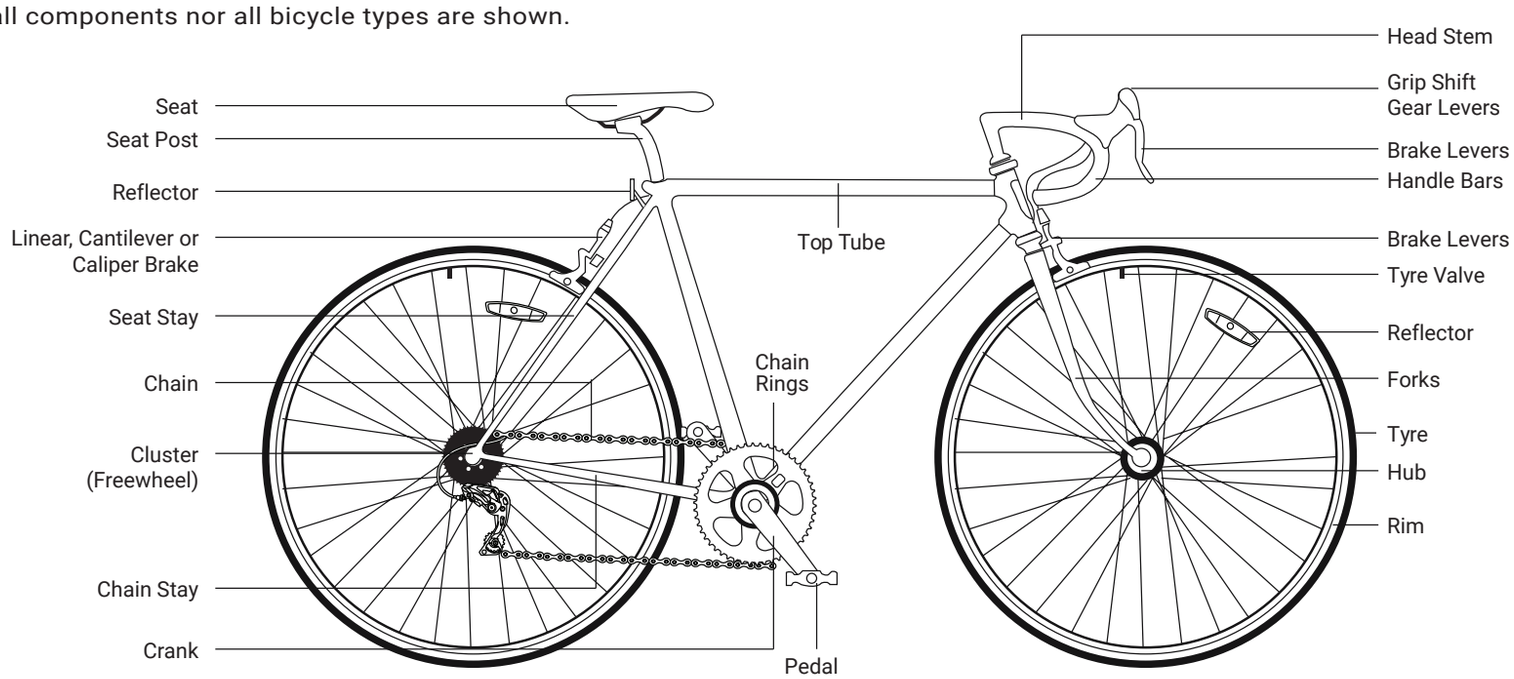

WARNING: Handlebar handgrips or tube-end plugs should be replaced if damaged. Unprotected tube-ends can cause injury. Bicycles used by children should especially be checked to ensure bar end handgrips are in good condition.

FOR ALL TYPES

Where a suspension unit, disk and/or hydraulic brake units, multi-gear hub, electric gear changing system, etc, are fitted, consult manufacturers specification and warranty documents. For correct selection and repair advice, ask your bicycle retailer. Unauthorised work may limit or void a product warranty.

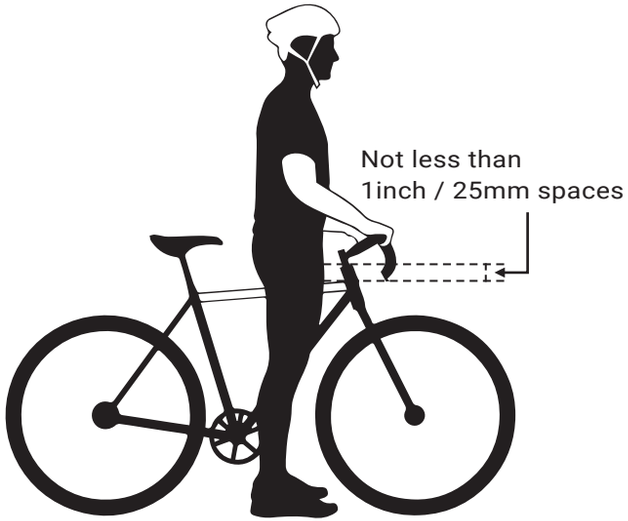

1. SAFETY PRECAUTIONS

1.1 FITTING YOUR BICYCLE FOR A SAFE RIDE

To ride safely and comfortably a bicycle and its equipment must be matched properly to the size and skills of the rider.

MAKE SURE THE BICYCLE FITS

A bicycle that is too big or too small for the rider is hard to control and can be uncomfortable. If your bicycle does not fit properly, you may lose control and fall.

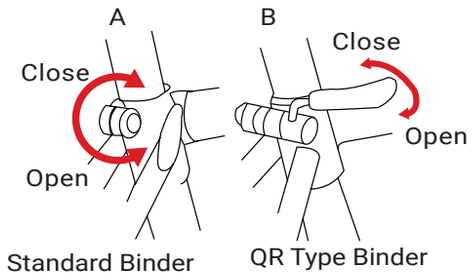

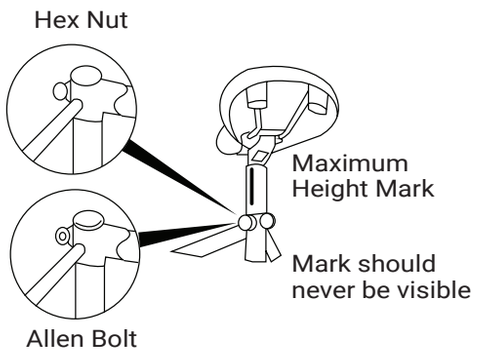

SADDLE HEIGHT

To ride comfortably and pedal efficiently, it's very important to have the saddle at the correct height. Your leg length determines the correct saddle height. The saddle is at the correct height for you when, while seated on the saddle, your knee is slightly bent when the crank is at the maximum down stroke (pedal is closest to the ground).

To adjust the saddle height, loosen the seat binder bolt (A) or the quick release (B) and move the seat post up or down as required. Make sure that the saddle is parallel to the top tube of the bicycle. Retighten the seat post tight enough so that you cannot twist the saddle out of alignment.

A loose seat post will allow the saddle to turn or slip and may cause you to lose control and fall. Therefore:

1. Ask your bicycle retailer to help you make sure you know how to correctly clamp your seat post.

2. Before you ride the bicycle, first check that the seat post is securely clamped.

Under no circumstances should the seat post project from the frame beyond its 'Minimum Insertion' or 'Maximum Extension' mark.

WARNING: do not replace the seat post with a post which is: A) not of the same diameter or B) longer than the original. Either will void the warranty and could lead to seat post failure, loss of rider control and injury.

HANDLEBAR HEIGHT AND ANGLE

After you have set the saddle height and tilt, adjust the handlebar for a safe and comfortable ride. Ask your bicycle retailer for advice.

WARNING: Under no circumstances should the head stem be retightened with its 'Minimum Insertion' or 'Maximum Extension' mark visible. 'Threadless' headset. DO NOT over tighten the two securing bolts. If unsure, consult your bicycel retailers.

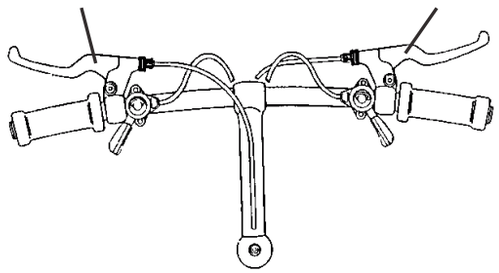

If the front brake cable is attached to the handlebar stem moving the stem up or down will require a readjustment of the brake. If in doubt, ask your bicycle retailer to make the adjustment.

CONTROLS POSITION ADJUSTMENT

The brake and shifting controls on your bicycle are positioned where they work best for most riders. The angle of the controls and the position on the handlebars can be changed. **Ask your bicycle retailer to make the adjustments for you.**

WARNING: Front wheel brake lever must be mounted on the **right** hand side; **rear** brake lever on the **left** hand side.

HAND BRAKE LEVER 'REACH'

Many bicycles have brake levers which can be adjusted for 'reach'. If you have small hands and find it difficult to squeeze the brake levers, your bicycle retailer can either adjust the reach or fit shorter reach brake levers.

1.2 SAFETY CHECK BEFORE RIDING YOUR BICYCLE

- ☐ Check and tighten any loose nuts, bolts and straps. If you're not sure, ask your bicycle retailer to check.
- ☐ **Tyres** correctly inflated? Check by pushing down with your thumb on the top of the tyre. The tyre should depress slightly. Compare to how it feels when you know the tyres are correctly inflated.

  Replace damaged tyres before they puncture.
- ☐ **Wheels** true? Spin each wheel and check for brake clearance and side-to-side wobble. If a wheel wobbles or hits the brake pads, take the bicycle to your bicycle retailer.
- ☐ **Brakes:** Check that the brakes operate effectively.

QUICK RELEASES

- [ ] Are the front wheel, rear wheel and seat post quick releases properly adjusted and in the locked position? Check all quick release mechanisms are correctly and securely closed.

CHECK LIGHTS AND REFLECTORS

- [ ] Working
- [ ] Correctly aligned

HANDLEBAR AND SADDLE

- [ ] Are the handlebar and saddle system: horizontal? tight enough so they won't twist? handlebars secure, good condition? handle bar ends plugged?
- [ ] Is a bell fitted and working?

Any broken or worn parts should be replaced before the bicycle is used.

Certain activities may damage your bicycle and result in serious personal injury. Take these precautions:

- avoid jumping curbs
- avoid potholes and gratings
- avoid stunt riding and jumping

WARNING: Do not remove protective safety equipment fitted to your bicycle, including handlebar end covers or plugs; reflectors fitted to frame, wheels and pedals; reflector mount brackets (where cantilever brakes are fitted); front chain ring guard; rear wheel spoke protector (right hand side); chain guard where fitted; warning stickers affixed to frame.

NOTE: A replacement fork must be the same length and maintain the same rake and trail characteristics as the original. Ask your bicycle retailer for advice.

1.3 SAFETY EQUIPMENT AND SENSIBLE RIDING

As a road user you have responsibility for your own safety and the safety of others.

You need to know:

- the road rules
- how to ride safely

YOUR BICYCLE (CONT)

- Know how to work all bicycle controls.
- For riding in low light and night conditions, fit your bicycle with appropriate front and rear lamps.

WARNING: Check reflectors and mounting brackets regularly to make sure that they are clean, straight, unbroken and securely mounted. Equip your bicycle with lights: white front and red rear. Riding in low light or at night time without reflectors and lights is extremely dangerous.

The mounting position for reflectors shall be above the level of the back axle, and shall be such that the reflector(s) are not obscured from view eg. By the riders clothing or by the wheel.

YOUR CLOTHING

- Wear a correctly fitted and fastened approved helmet.
- **Be seen:**
  wear brightly coloured clothes - yellow, green and orange are best for day, reflective tape improves the conspicuity of riders at night.
- Wear shoes, not thongs or ride with bare feet.

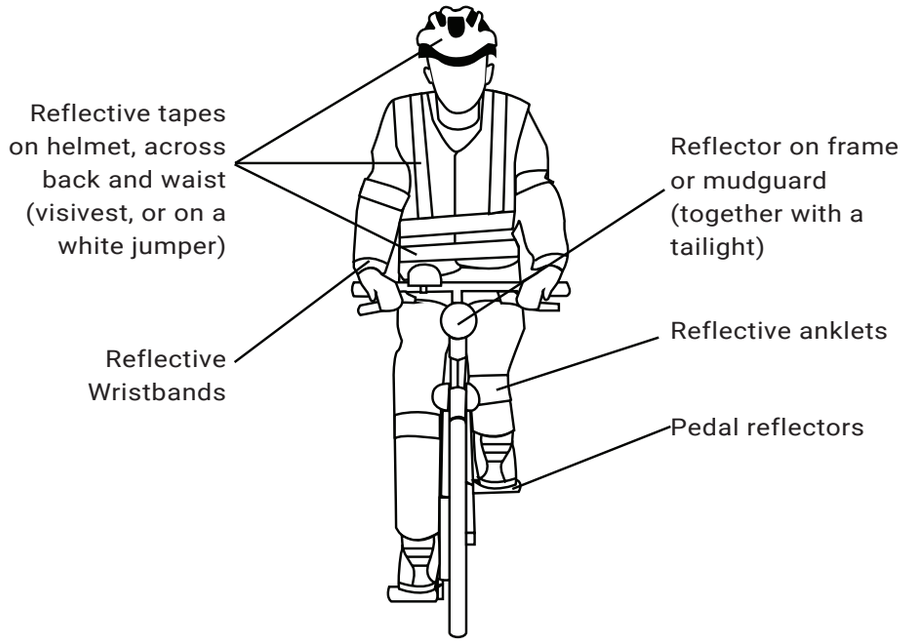

WARNING: Always wear a correctly fitted and fastened helmet when riding your bicycle.

Correct Fit

Incorrect Fit

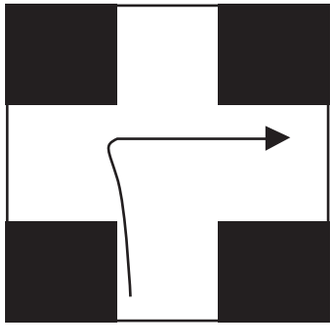

BE ALERT

- Obey all road rules
- Watch out for other road and pathway users.
- Adapt your riding to suit the conditions.

HOOK TURN

This manoeuvre can assist in safer right hand at intersection.

There are three steps to the hook turn:

1. Stay on the left, go straight ahead and cross the intersection. Stop on the other side of the intersecton.
2. Swing your bike around to face the new direction.
3. Obey any traffic lights and complete your turn when it is safe.

CARRYING LOADS

- Use correctly fitted carriers, racks, panniers or a back intersections. pack for parcels.

RIDING IN THE WET

Wet weather affects visibility for all road users.

It is harder for you, and other vehicles, to stop in the wet. Allow more distance to brake.

RIDING IN LOW LIGHT

Riding when light levels are low:

- use lights and reflectors.
- wear bright reflective clothing.

BE RESPONSIBLE

Follow the road rules. Use common sense. If riding in remote areas:

- go with a friend.
- leave details of route and return time with a responsible person.
- tell them when you get back!

PARENTS

Most cycling incidents involve small children and teenagers.

Make sure:

- The bicycle is in good working order.
- The rider knows:

  How to use the controls.

  The road rules.
- Clothing, helmet, lighting are appropriate for the bicycle trips undertaken.

QUICK SAFETY SUMMARY

- Obey all traffic laws
- Be predictable
- Be alert
- Use reliable safety equipment
- Use the bicycle for the manufacturer's recommended purpose
- Adjust riding to traffic and weather conditions
- Wear appropriate clothing
- Follow the manufacturer's instructions for any adjustments

2.1 MAINTAINING YOUR BICYCLE

SERVICE AND BASIC MAINTENANCE

Bicycles perform best when they are kept clean, lubricated and serviced regularly.

How much of your bicycle's service and maintenance you can do yourself depends on your level of skill and experience, and whether or not you have the special tools required.

WARNING: Some bicycle service and repair tasks require special knowledge and tools. Do not begin any adjustments or service on your bicycle if you have doubt about your ability. Unauthorised or incorrect service and repairs may void product warranty.

CLEANING

Mud and dust can be highly abrasive. Regular cleaning will help maintain your bicycle in good condition. Always dry and lubricate your bicycle after washing to prevent rust.

LUBRICATION

Keep your bicycle regularly lubricated for good performance and durability. Lubrication reduces friction and helps protect against rust.

All bearings and other moving parts require regular appropriate lubrication:

- Grease type lubrication: Bearings in head stem, wheels, bottom bracket and pedals (requires disassembly refer to your bicycle retailer).
- Oil type lubrication: Brake and derailleur pivot points and jockey wheels, chain, free wheel.

For advice on appropriate special lubricants, ask your bicycle retailer.

2.2 MONTHLY SERVICE CHART

Monthly servicing of your bicycle is recommended. This consists of lubrication and adjustment of components.

Use the correct type of lubricants and tools, service the bicycle's components in logical groups and clean before you start.

TYRES AND TUBES

- Clean the tyres and inspect treads for wear.
- Remove any debris from tread or walls.
- Check tyre pressure is correct.
- Replace faulty tubes.

WHEELS

- Clean rims and check they are not dented or dimpled.
- Check rims for trueness and spokes for evenness of tension.
- Replace any bent or broken spokes.

CHAIN

- Check chain for excessive wear or stretching.
- Check for any stiff links.
- Use recommended lubricant.

BRAKES

- Check brake block and brake lever mounting bolts.
- Check brake blocks for wear. Replace if necessary.
- Check block toe-in is correct.
- Lubricate brake pivot bolts and adjust where necessary.

HUBS

- Check front and rear hub bearings for excess play or binding. Have adjustable cup-and-cone bearings, tightened or loosened if necessary.
- Check hubs are correctly lubricated.
- Tighten hub axle nuts and check quick release levers.

FRONT AND REAR DERAILLEURS

- Clean derailleur cages bushings.
- Check the accuracy of the indexing and adjust cable tension at barrel adjusters and/or cable anchor bolts as required.

CRANK/CHAINRINGS AND FREEWHEELS

- Clean chainrings; check they are true and have no excessively worn, or broken teeth.
- Check crank arms are tight on bottom bracket spindle.
- Clean and lubricate freewheel and check for wear.
- Check freewheel sprockets for worn or broken teeth.

BOTTOM BRACKET/AXLE

- Test bottom bracket bearings for excess play or binding.
- Check that the locknut is tight.
- Check bottom bracket is correctly lubricated.

HEADSET

- Check headset for excess play or binding.
- Check the locknut is tight.

PEDALS

- Check pedal bodies are not cracked.
- If pedals are loose, tighten the mounting bolts firmly.
- Inspect toe clips/toe straps for damage.

GENERAL

- Check frame alignment and all the tubes for dents or damage.
- Check all bolts and nuts are secure. Tighten bolts with the correct tools.

CAUTION: Alloy bicycle parts can be damaged by overtightening.

STORAGE

The best protection for your bicycle is to store it under cover in a dry environment and away from corrosive materials such as battery acid and swimming pool chemicals. Thoroughly dry off your bicycle after use in wet conditions. Wax or lubricate as required.

Failure to follow this procedure may lead to rust and corrosion of metal work.

3. ADDITIONAL INFORMATION HELPFUL HINTS, SPECIAL INSTRUCTIONS AND WARRANTY

3.1 ABOUT YOUR BICYCLE RETAILER

Your bicycle retailer will help you to select bicycle accessories for the kind of riding you wish to do. Bicycle shop staff have the knowledge, tools and experience to give you reliable advice and provide maintenance services. If you have a problem with your bicycle or your riding, talk to your bicycle retailer.

3.2 TOOLS AND BICYCLE ASSEMBLY

Should you intend to undertake maintenance the following tools are considered to be the basic requirement:

- Adjustable wrench 5-10cm
- Adjustable wrench 32cm
- Flat screw driver 15mm
- Phillips head screw driver 15mm
- Allen Key set 2mm-6mm
- Set of open end spanners 7-17mm
- Set of tyre levers
- Chain link remover
- Wire cutters
- Torque wrench

All nuts and bolts should be checked on a regular basis for tightness. To assist in achieving the correct tension when tightening nuts and bolts the use of a torque wrench is recommended. Apply the following torque for the nominated parts of your bicycle:

Front Wheel Nuts	22-27 Newton Metres
Rear Wheel Nuts	24-29 Newton Metres
Seat Binder Nut	12-17 Newton Metres
Seat Pillar Clamp Nut	4-19 Newton Metres
Brake Anchor Nut	7-11 Newton Metres
Handle Bar Clamp Nut	5-19 Newton Metres
Head Stem Expander Bolt	17-19 Newton Metres
Crank Cotter Pin Nuts	5-10 Newton Metres
Brake Centre Bolt	5-7 Newton Metres
Pedals	35-40 Newton Metres

The following checklist presumes a bicycle which is assembled except for the handlebar & stem, brake and gear levers, saddle and seat stem, pedals, frame reflectors and wheels.

- Fit wheels to frame and align. Secure axle nuts or Quick Release (QR) mechanism.
- Lubricate handlebar stem, slacken wedge bolt and wedge, slide into head set to below minimum insert mark, align square to front wheel, tighten wedge bolt. Tighten wedge bolt. Check head stem lock nut is tight and that the handlebar will not rotate.
- If your bicycle is equipped with a ‘threadless’ headset, check fitting adjustments with your bicycle retailer. DO NOT OVER TIGHTEN the two securing bolts.
- Slide brake and gear lever assemblies onto handlebar in correct configuration. Tighten locking bolts. Adjust brake assembly cables and align brake blocks for prescribed clearance.
- Fit handlebar tape or handgrips, stop ends to bar if bar is taped, and bell.
- Assemble saddle onto seat stem. Tighten fixing nuts. Lubricate seat stem and insert in seat tube to below minimum insert mark. Tighten seat binder bolt or Quick Release mechanism.

- Fit pedals to crank in correct order; pedal marked R on the right hand side; L on the left.
- Fit frame mounted reflector brackets and reflectors. Align reflectors to vertical. Tighten all bolts. Confirm that wheel reflectors are fitted.
- Recheck that all components are correctly assembled, all bolts, nuts and QR correctly secure. Check that handlebar and saddle cannot be swivelled sideways.
- Check derailleur gears/hub gears for correct operation; adjust to manufacturer's specification. Check both brakes for correct operation.

WARNING: If you are unsure about correct assembly and/or adjustment, seek advice from a qualified bicycle mechanic.

'Threadless' head sets: some bicycles, especially those equipped with a front fork suspension system, are fitted with a 'threadless' head set. Special tools and/or procedures may be required to correctly secure such devices.

3.3 LOCK YOUR BICYCLE

A carbon fibre frame requires special care due to the nature of its construction.

Lock your bicycle to something solid e.g. a tree, a parking meter or a post. Make sure the bicycle cannot be lifted from the post or the post lifted out of the ground or pavement. Use a good quality U-Lock.

A good quality, hardened steel U-lock is your bicycle's best protection from theft. U-locks are more secure than cables or chains with padlocks. Combination locks provide least security.

Make sure the lock or cable is not in a position which makes it easy to be removed or cut.

- A front wheel with Quick Release can be removed and locked to the frame.
- A good quality U-Lock may be the most secure device for locking your bicycle.
- Bicycle parking rails should comply with Australian Standard AS2890.3 (1993).

- Refer to Guide to Traffic Engineering Practice Part 14 - Bicycles (AUSTROADS 1999).
- **www.bikeoz.com.au** - provides additional information.
- **www.cyclingpromotion.com.au** - helping you get more out of your riding.

3.4 KEEP A RECORD OF YOUR BICYCLE

Take a colour photograph of your bicycle, write the frame number on the back of the photograph and keep it in a safe place. Less than one in ten stolen bicycles is returned, partly because the owner cannot describe the bicycle. Engraving a registration number on the bicycle will also help. The police, Neighbourhood Watch and service clubs run bicycle registration programs.

If you keep a record of the details of your bicycle it will greatly increase the possibility of getting it back should it be lost or stolen.

Remember the advice about LOCKING YOUR BICYCLE.
A good quality lock is cheap insurance.

See the record chart at end of this manual.

TROUBLESHOOTING CHART

PROBLEM	POSSIBLE CAUSE	REMEDY
Frequent punctures	Inner tube old or faulty	Replace inner tube
	Tyre tread / casing worn	Replace tyre
	Tyre unsuited to rim	Replace with correct tyre
	Tyre not checked after previous puncture	Remove sharp object embedded in tyre
	Tyre pressure too low	Correct tyre pressure
	Spoke protruding into rim	File down spoke

continued over ▸

TROUBLESHOOTING CHART (CONTINUED)

PROBLEM	POSSIBLE CAUSE	REMEDY
When applying the brakes they squeal/squeak	Brake blocks worn down	Replace blocks
	Brake block toe-in incorrect	Correct block toe-in
	Brake blocks / rim dirty or wet	Correct block toe-in
	Brake arms loose	Tighten mounting bolts
Brakes not working effectively	Brake blocks worn down	Replace brake blocks
	Brake blocks or rims greasy, wet or dirty	Clean blocks and rims
	Brake cables are binding / stretched / damaged	Clean / adjust / replace cables
	Brake levers are binding	Adjust brake levers
	Brakes out of adjustment	Centre brakes
Steering not accurate	Wheels not aligned	Align wheels correctly
	Headset loose or binding	Adjust / tighten headset
	Front forks or frame bent	Seek advice at a bicycle shop
Knocking or shuddering when applying the brakes	Bulge in the rim or rim out of true	True wheel or take rim to a bicycle shop for repair *
	Brake mounting bolts loose	Tighten bolts
	Brakes out of adjustment	Centre brakes and / or adjust brake block toe-in
	Disk brakes: disk may be bent or blocks not free	Seek advice at a bicycle shop
	Forks loose in head tube	Tighten headset
Wobbling wheel	Axle broken	Replace axle
	Wheel out of true	True wheel
	Hub cones loose	Adjust hub bearings
	Headset binding	Adjust headset

*** Repair of damaged front wheel rim not recommended. Replace wheel rim.**

continued over ▸

TROUBLESHOOTING CHART (CONTINUED)

PROBLEM	POSSIBLE CAUSE	REMEDY
Slipping chain	Excessively worn / chipped chainring or freewheel	Replace chainring, sprockets and chain
	Chain worn / stretched	Replace chain
	Stiff link in chain	Lubricate or replace link
	Non compatible chain / chainring / freewheel	Seek advice at a bicycle shop
Chain jumping off	Chainring bent	Replace Chainring
	Chainring loose	Tighten mounting bolts
	Chainring teeth bent or broken	Replace Chainring
	Rear or front derailleur side-to-side travel out of adjustment	Adjust derailleur travel
Constant clicking noises when pedalling	Stiff chain link	Lubricate or replace link
	Loose pedal spindle / bearings	Adjust bearings / spindle nut
	Loose bottom bracket spindle / bearings	Adjust bottom bracket
	Bent bottom bracket / pedal spindle	Replace bottom bracket / spindle
	Loose crank	Tighten crank bolt
Grinding noise when pedalling	Pedal bearings too tight	Adjust bearings
	Bottom bracket bearings too tight	Adjust bearings
	Chain fouling derailleurs	Adjust chain line
	Derailleur jockey wheels dirty / binding	Clean and lubricate jockey wheels
Freewheel does not freewheel	Freewheel internal pawl pins are jammed	Lubricate. If problem persists, replace freewheel

Regular maintenance by your bicycle retailer is recommended

KEEP A RECORD OF YOUR NEW BICYCLE

OWNER:

ADDRESS:

POSTCODE: TEL:

BRAND & SERIAL NUMBER:

MODEL:

FRAME STYLE:

FRAME SIZE:

FRAME COLOUR(S):

WHEEL SIZE:

TYRE SIZE & TYPE:

BRAKE TYPE & BRAND:

TRANSMISSION BRAND:

SADDLE BRAND:

OTHER ACCESSORIES (LIST & BRAND NAMES):

PURCHASED FROM (SHOP NAME):

SHOP ADDRESS:

TEL: DATE OF PURCHASE: / /

PRICE PAID: $

Remember the advice about LOCKING YOUR BICYCLE.
A good quality lock is cheap insurance.

KILOPASCAL FROM PSI CONVERSION TABLE

PSI	BAR	KPA	PSI	BAR	KPA
35	2.4	241	100	6.9	689
40	2.8	276	105	7.2	724
45	3.1	310	110	7.6	758
50	3.5	345	115	7.9	793
55	3.8	379	120	8.3	827
60	4.1	414	125	8.6	862
65	4.5	448	130	9.0	896
70	4.8	483	135	9.3	931
75	5.2	517	140	9.7	965
80	5.5	552	145	10.0	1000
85	5.9	586	150	10.3	1034
90	6.2	621	155	10.7	1069
95	6.6	655	160	11.0	1103

NOTES

III. BICYCLE ASSEMBLY INSTRUCTIONS

1 INSTALLING THE FRONT WHEEL

QUICK RELEASE FRONT WHEELS

STEP 1.A

This wheel comes equipped with a quick release axle. First, you need to remove the protective caps from the axle.

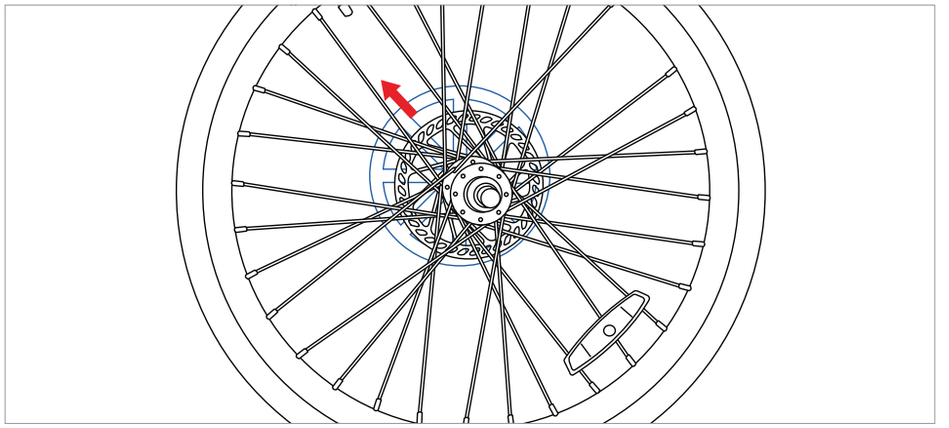

STEP 1.B

Attach the front wheel to the forks making sure the brake disc is on the same side as the brake calliper.

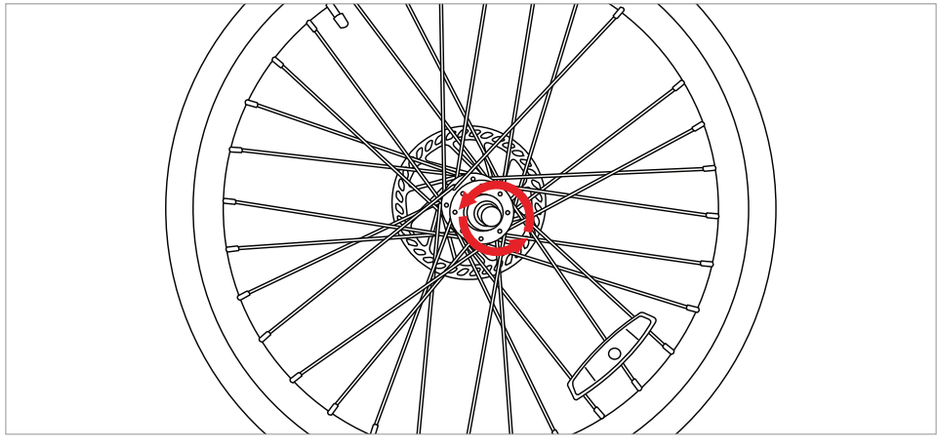

2 QUICK RELEASE FRONT WHEELS

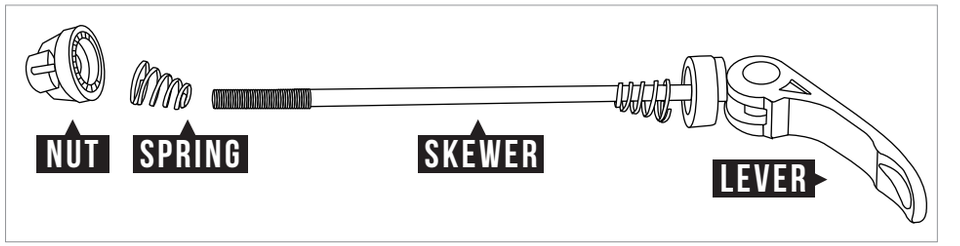

STEP 2

Attach the front wheel to the forks making sure the brake disc is on the same side as the brake calliper.

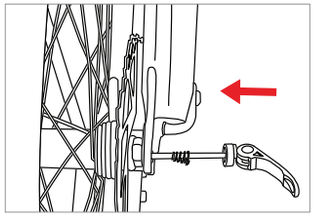

STEP 2.A

Push the quick release skewer with first spring on through the left hand side of the bike. Make sure the lever is on the left hand side of the bike. The small end of the spring should be closest to the wheel.

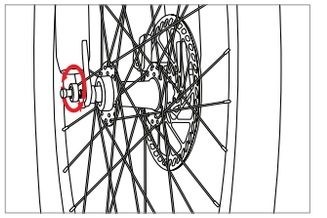

STEP 2.B

Now, slide on second spring and screw on the end cap. Before tightening the skewer, make sure the wheel is in the centre of the fork.

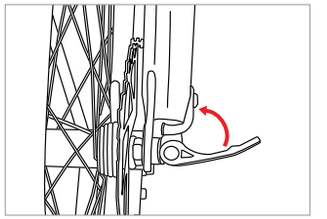

STEP 2.C

Now, starting with the lever facing up. Tighten the end nut. Then push the lever up until fully closed.

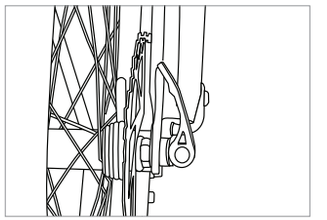

STEP 2.D

We recommend locking the lever in the same direction on the forks to prevent debris pushing lever open. Make sure you have reasonable tension when tightened so lever does not shake loose when riding.

3 INSTALLING THE FORKS & HANDLEBARS

FACE PLATE STEM

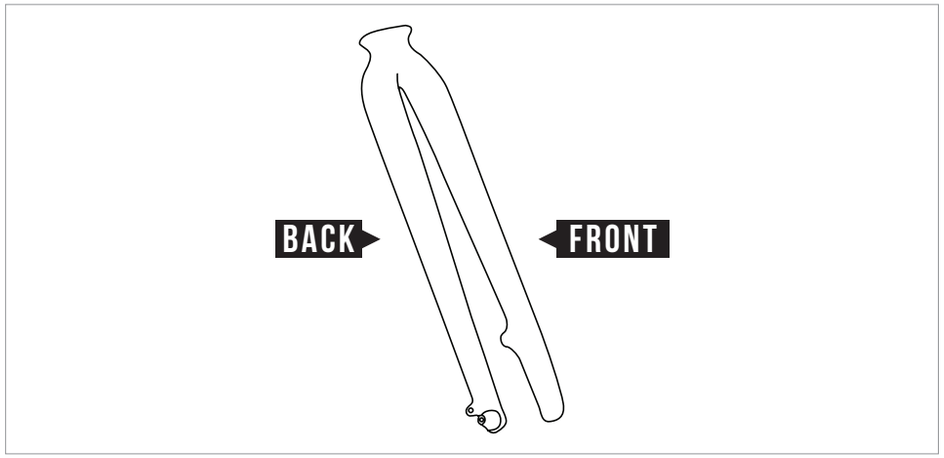

STEP 3.A

Make sure your forks are facing the right direction.

NOTE: For disc brakes, the brake calliper should sit behind the forks.

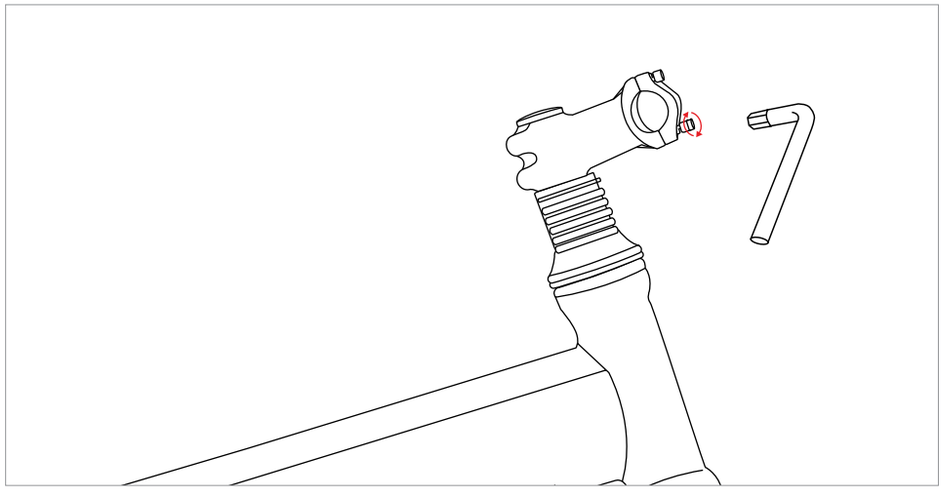

STEP 3.B

Remove the head stem cap located near the handlebars by unscrewing the bolts using the Allen key.

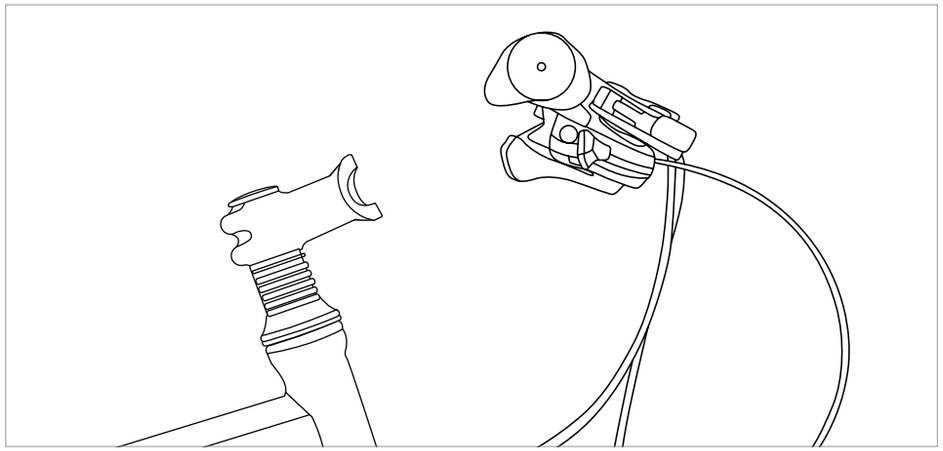

STEP 3.C

Before attaching the handlebar, ensure that the cables are not twisted or wrapped around the fork.

NOTE: Make sure your handlebars are sitting in the correct direction. This means the brake levers are facing forwards and gear levers are sitting with the numbers facing upwards.

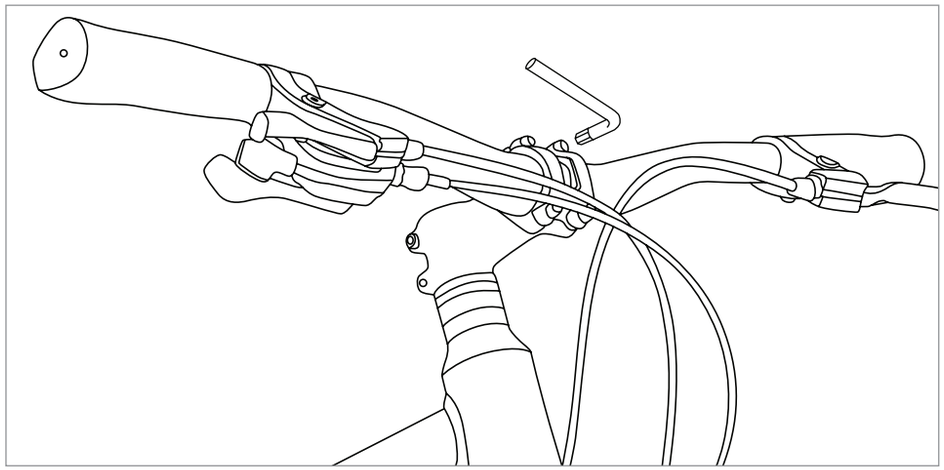

STEP 3.D

Attach the handlebars and replace the head stem plate. Have the bolts fitted evenly and firmly, but don't tighten them completely yet.

4 INSTALLING THE SADDLE & SEAT POST

ATTACHING THE SEAT POST

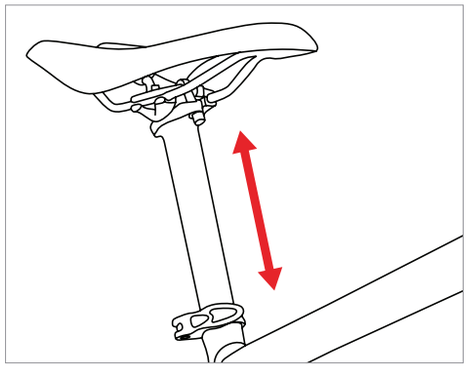

STEP 4.A

Slide your seat in and choose the desired height before tightening.

STEP 4.B With your quick release seat post, simply tighten the nut, then bend the lever inwards.

NOTE: Make sure you have reasonable tension when bending the lever - so the seat doesn't come loose.

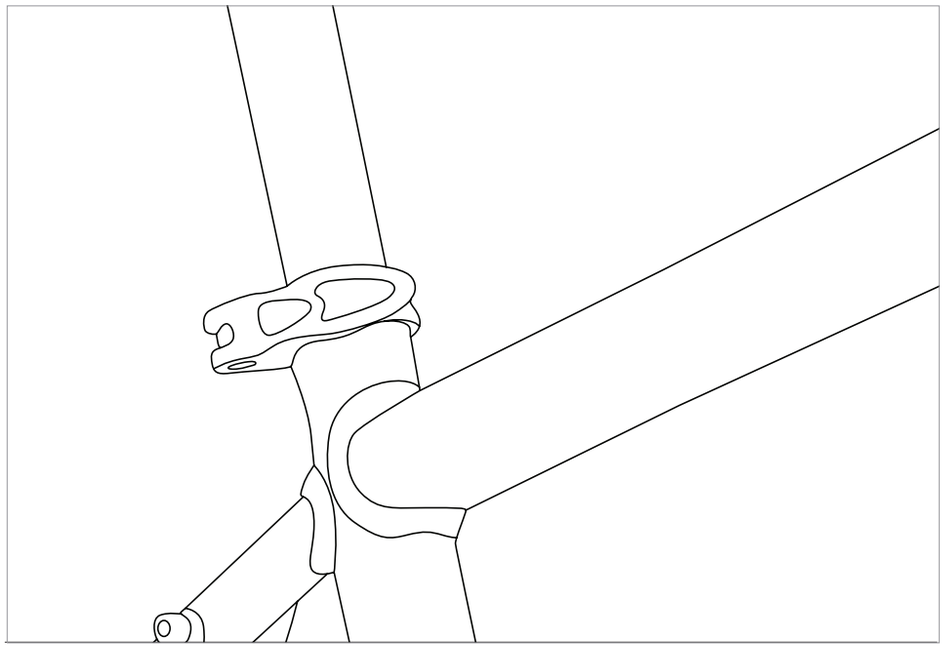

STEP 4.C

Once your seat post is secure, evenly tighten up the nuts either side of saddle until firm.

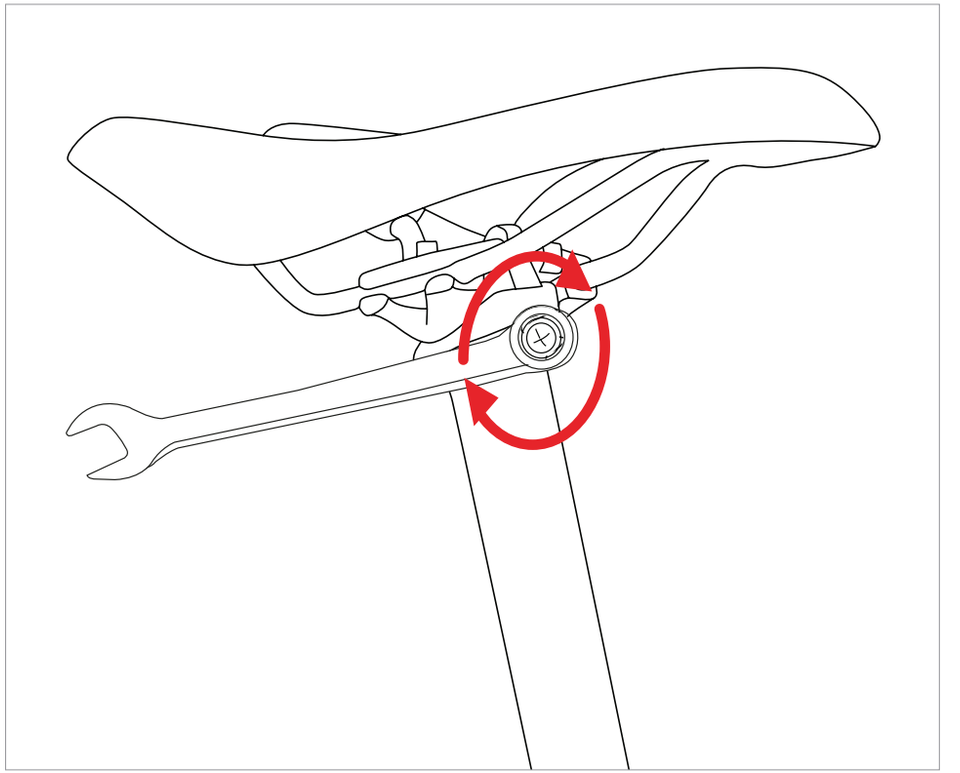

NOTE Make sure seat is level for the most comfort.

5 BRAKE ADJUSTMENT (DISC BRAKE)

STEP 5.A

The first thing to set up is your caliper alignment. We'll start with the front disc brake.

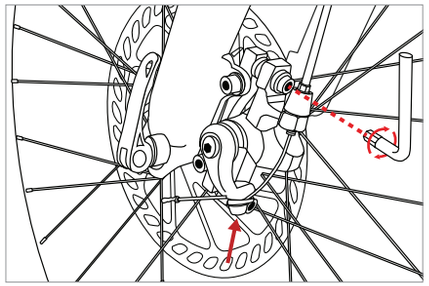

STEP 5.B

Loosen the two bolts holding the front bake calliper.

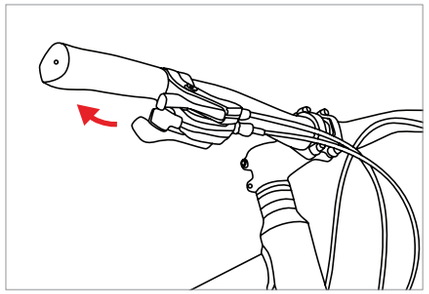

STEP 5.C

While squeezing the front brake lever, retighten the two bolts.

STEP 5.D

The next step is to adjust the free play in the brake cable.

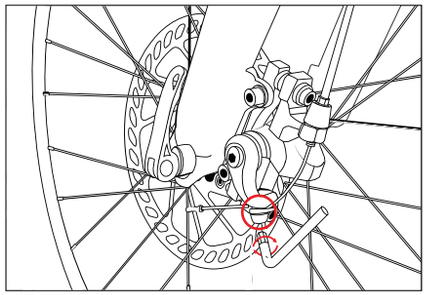

STEP 5.E

Do this by loosening the cable anchor bolt until the cable runs free.

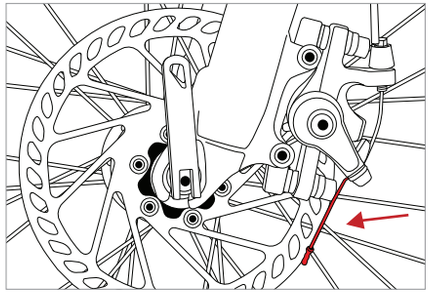

STEP 5.F

Loosen the pinch bolt. Pull the slack out of the cable and tighten.

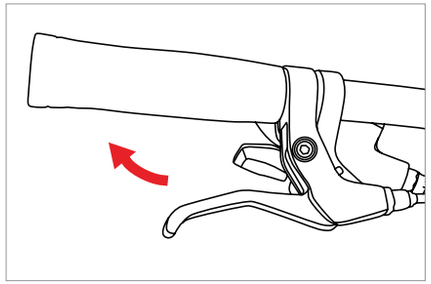

STEP 5.G

Retighten the anchor bolt and test the brake lever again.

STEP 5.H

Once correctly tightened, the lever should feel firm after 4-5 millimetres of travel. Further adjustment can be applied through the barrel adjuster on the brake lever or on the calliper.

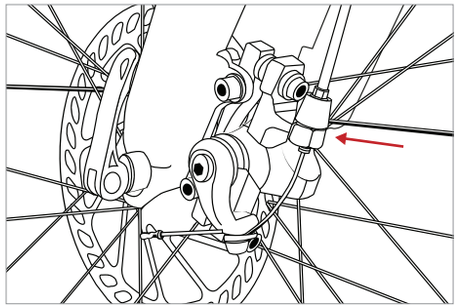

Barrel adjuster on front brake.

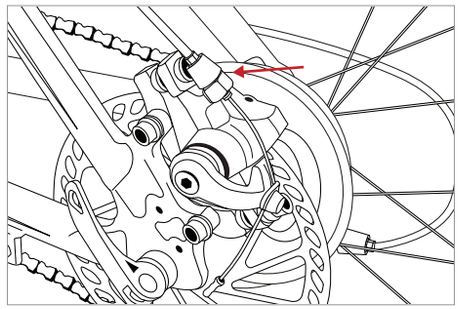

Barrel adjuster on rear brake.

6 PEDAL INSTALLATION

STEP 5.A To fit your pedals, start by identifying left and right pedals. These will be marked 'L' and 'R' for left and right.

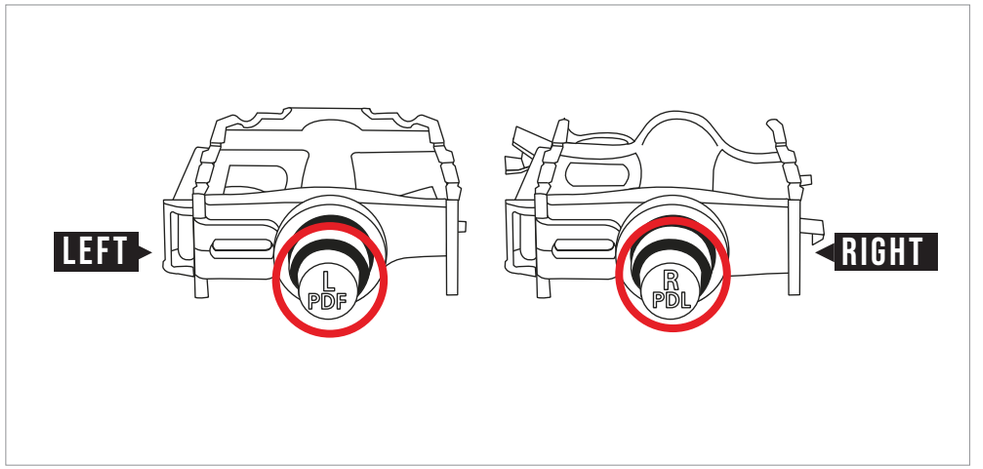

STEP 6.B Insert the right pedal by screwing it in CLOCKWISE like a normal screw. Tighten as far as possible.
NOTE: The right hand side of the bike is the chainwheel side of the bike.

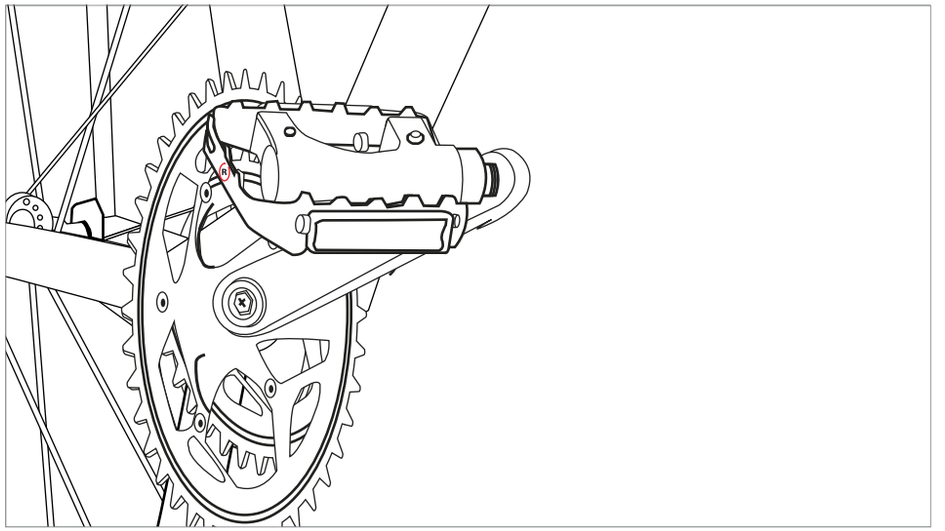

STEP 6.C Insert the left pedal by screwing it in COUNTER-CLOCKWISE the opposite of a normal screw. Tighten as far as possible.
NOTE: If you were to sit on the bike holding the handlebars, your left foot would be the left pedal

WARNING Tightening the pedal the incorrect direction could potentially damage the threading.

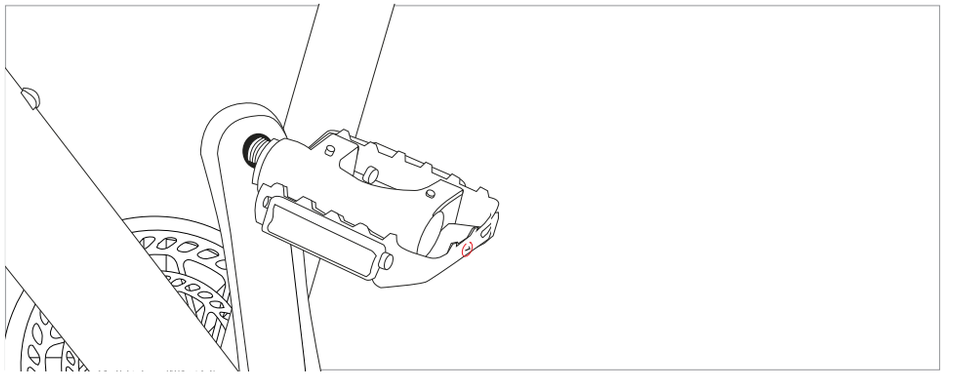

STEP 6.D Tighten both sides with a 15mm wrench. Ensure the crank is tightened for safety purposes.

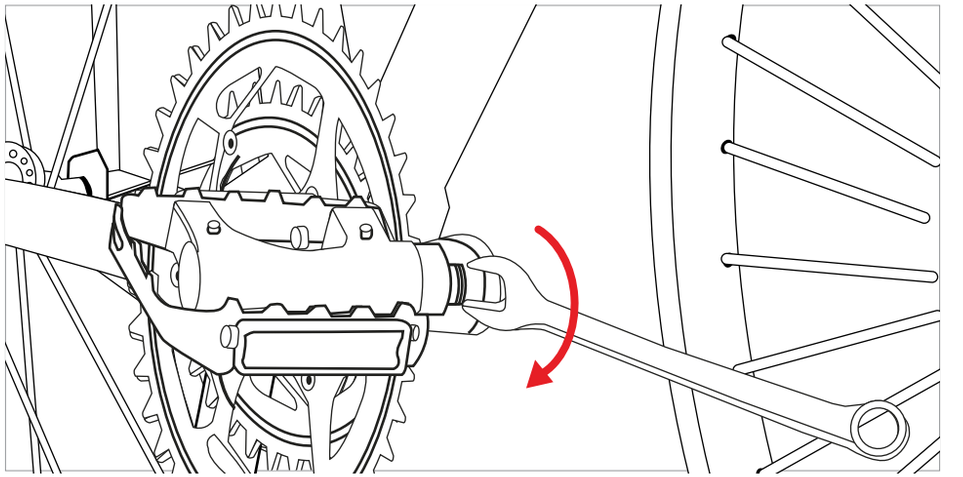

WARNING Failure to securely tighten the crank may cause damage to your bike

7 INSTALLATION OF TYRES

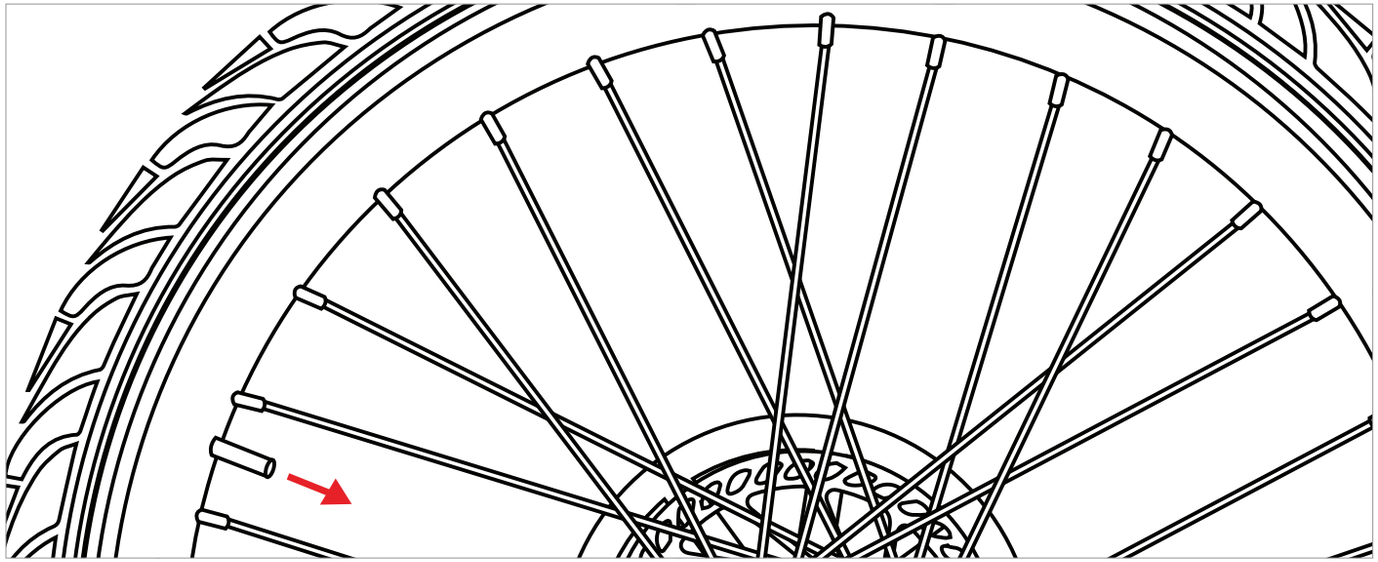

STEP 7.A

If the tyre is dead flat, pull the valve in, then push the tyre inwards from rear. This is to ensure the tube is sits correctly underneath the tyre.

STEP 7.B

After putting small amount of air in, note the bead line and ensure it is even all away around tyre.

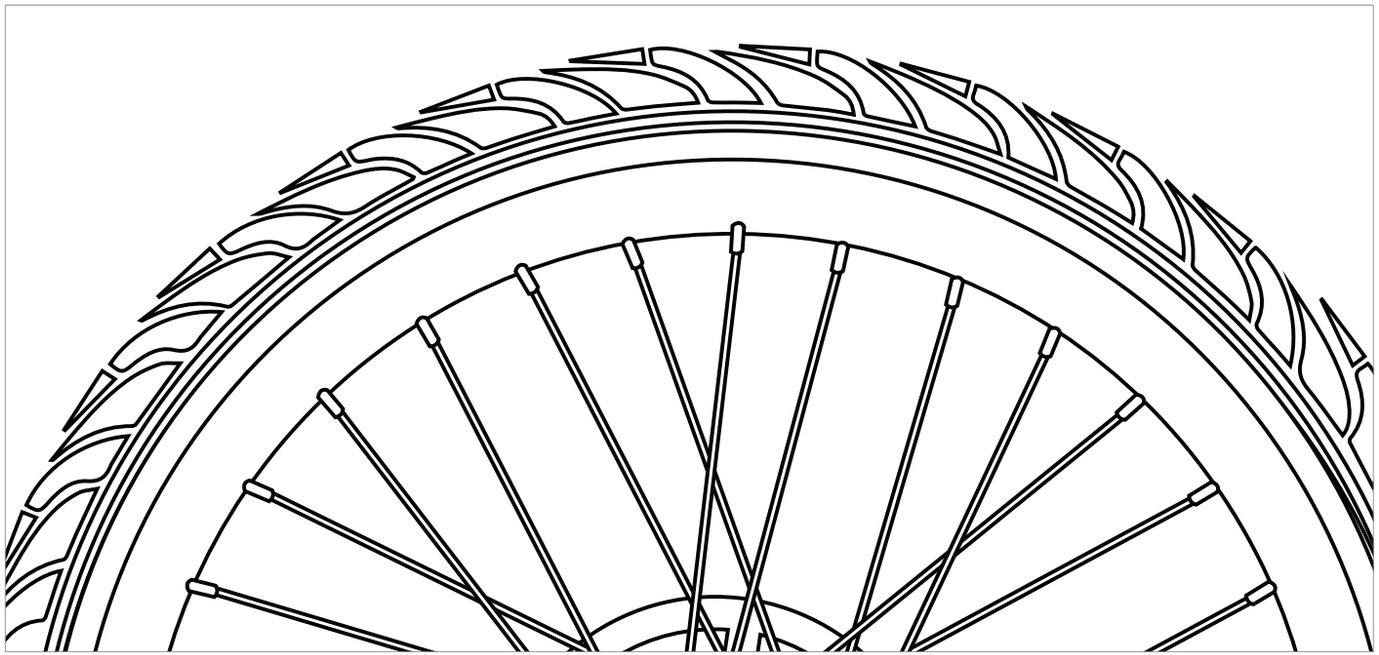

STEP 7.C

Inflate the tyre slowly while continuously checking the bead line.

STEP 7.D

Inflate to correct pressure as indicated on the tyre wall.

8 DERAILLEUR ADJUSTMENT

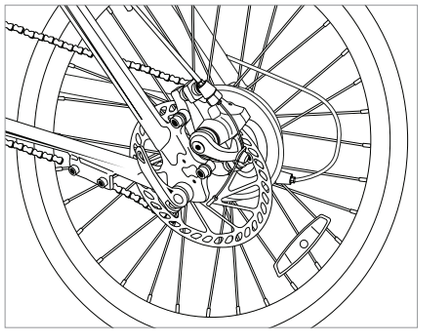

STEP 8.A

To adjust the rear derailleur, you will need to pedal the rear wheel freely. This can be done with a bicycle assembly stand.

NOTE: Tilt the bike such that the rear wheel is not touching the ground.

STEP 8.B As you are turning the pedals in a forward motion, adjust your gears down to the lowest setting - so the chain sits on the smallest cog.

NOTE: Observe the gears by shifting up and down with your free hand 1 gear at a time.

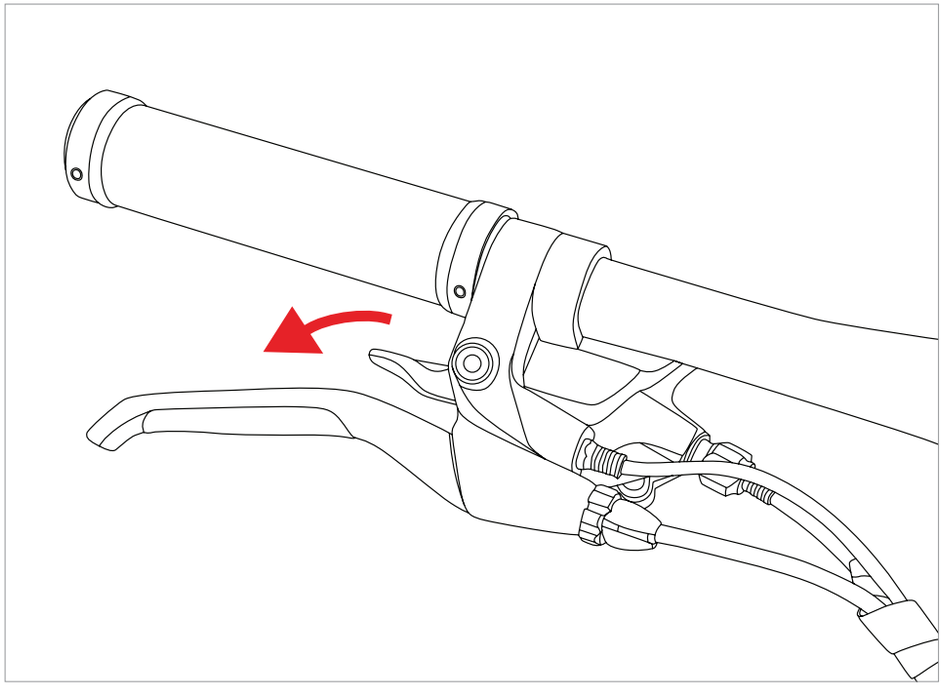

STEP 8.C The chain should move up a single cog with every upshift and down a single cog with every downshift.

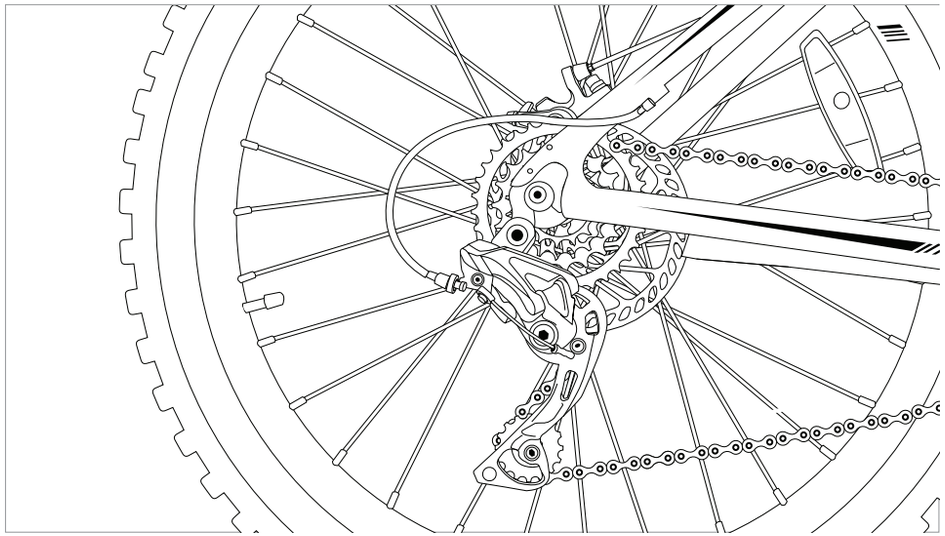

If it doesn't move up with a single upshift

- The gear cable is too loose. Fix this by increasing cable tension on the derailleur barrel adjuster.
- The opposite applies for a single downshift.

If your chain moves up by more than 1 gears cog in a single upshift

- Your gear cable is too tight and you should loosen the gear cable.
- Again, the opposite applies for a single downshift.

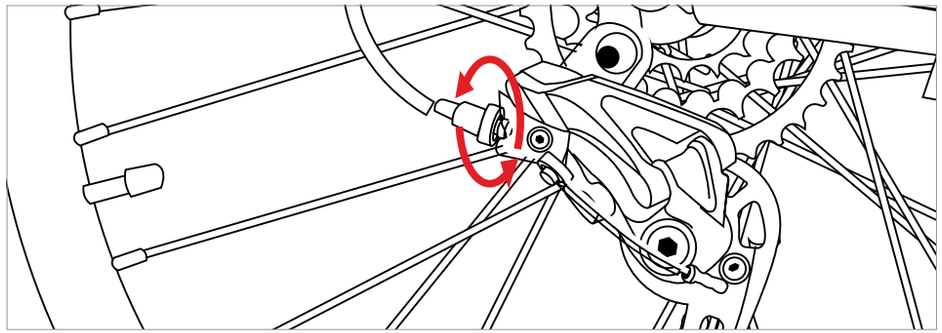

9 FINAL HANDLEBAR ADJUSTMENT

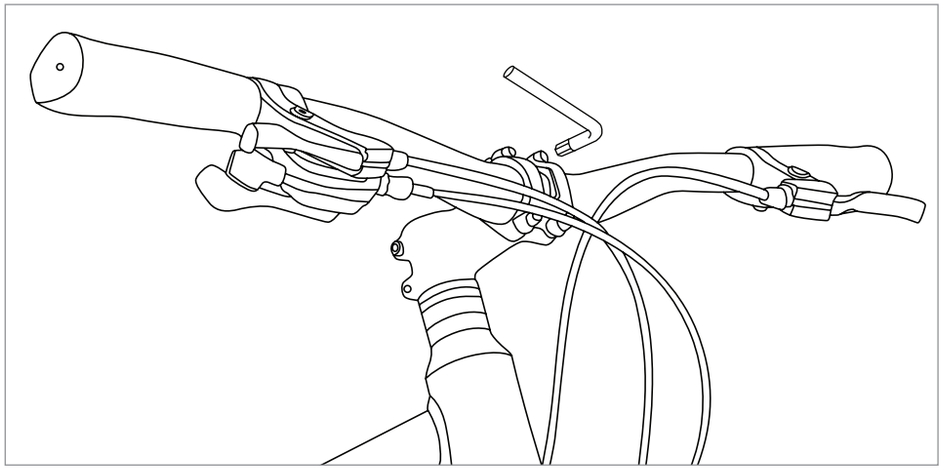

STEP 9.A

Rotate the handlebars to your desired position, ensuring they are centre to the faceplate. Then, tighten the faceplate bolts evenly and firmly.

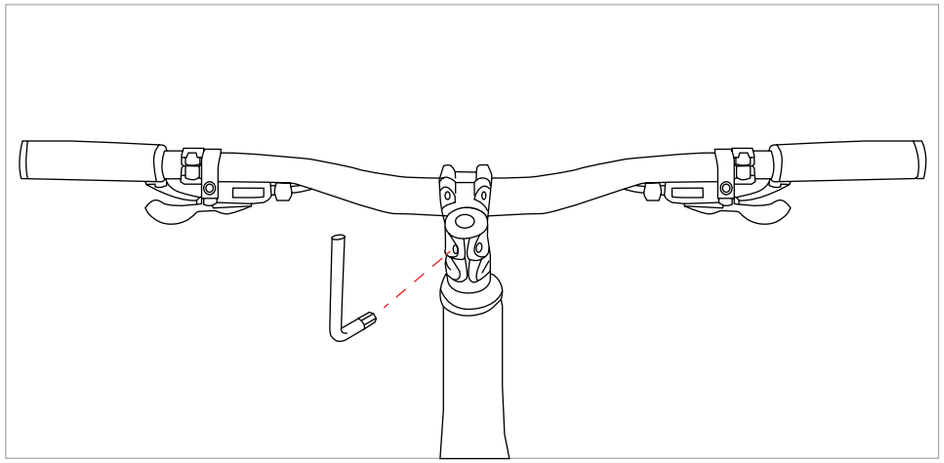

STEP 9.B

For the headstem you need to make sure the handlebar direction and front wheel are in alignment. Once aligned, tighten the headstem bolts evenly and firmly.

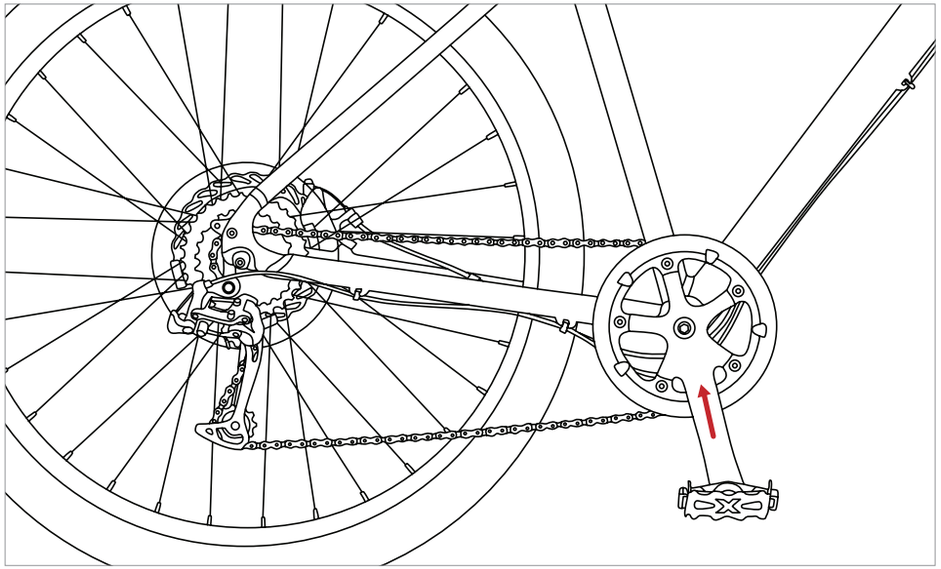

STEP 9.C

Finally, check that the crank bolts are tightened to the correct torque settings on both sides. The crank bolts are found under a plastic cover.

It is the responsibility of the supplier of your bicycle to include with this Owner Manual all relevant WARRANTY details.

Proof of ownership may be required before warranty provisions can be processed.

YOUR CONSUMER RIGHTS:

White pages telephone directories list State and Territory consumer and fair trading office numbers.

Key Words: CONSUMER AFFAIRS / FAIR TRADING

Government web sites provide extensive information. Check these sources.

Warranty enquiries should be made to the point of sale (the retailer) in the first instance.

THE INFORMATION CONTAINED IN THIS MANUAL COMPLIES WITH RELEVANT AUSTRALIAN AND NEW ZEALAND STANDARDS AT THE TIME OF PRINTING.

THIS MANUAL MAY NOT BE REPRODUCED WITHOUT THE WRITTEN PERMISSION OF BIA LTD.

IV. WARRANTY

AUSTRALIAN CONSUMER LAW

Many of our products come with a guarantee or warranty from the manufacturer. In addition, they come with guarantees that cannot be excluded under the Australian Consumer Law. You are entitled to a replacement or refund for a major failure and compensation for any other reasonably foreseeable loss or damage.

You are entitled to have the goods repaired or replaced if the goods fail to be of acceptable quality and the failure does not amount to a major failure. Full details of your consumer rights may be found at **www.consumerlaw.gov.au.**

Please visit our website to view our full warranty terms and conditions:
www.progearbikes.com.au/pages/warranty-repairs

WARRANTY AND SUPPORT

Please email us at **support@progearbikes.com.au** for all warranty or support issues.

For all warranty or support related enquiries, please lodge a support ticket first by sending us an email.

PROGEAR

www.progearbikes.com.au