GPR500 Folding Wooden Pilates Reformer Machine

USER MANUAL

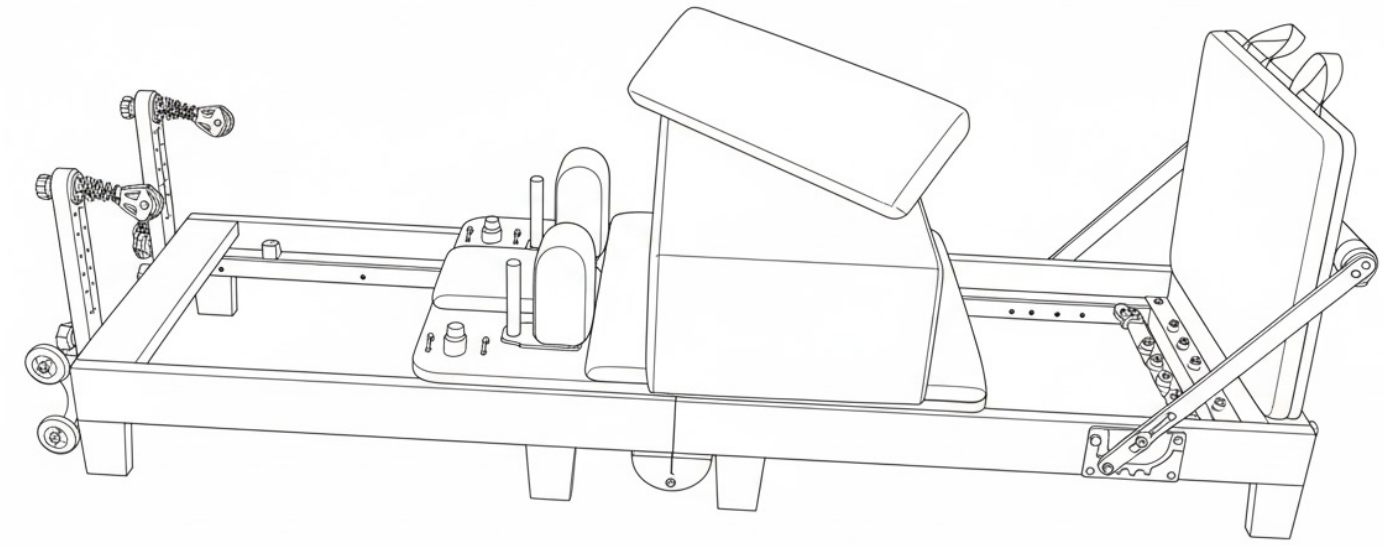

Find the Digital Manual Online

Read all instructions carefully before using this product.
Retain this owner's manual for future reference.

IMPORTANT

All nuts and bolts are to be checked and tightened on a regular basis. This includes pedals and other moving parts. Failure to do so may cause damage to your threads and void your warranty.

NOTE:
Product may vary slightly from the item pictured due to model upgrades. This manual may be subject to updates or changes.
Up to date manuals are available through our website at www.lifespanfitness.com.au

TABLE OF CONTENTS

I. Important Safety Instructions 03

II. Parts List 05

III. Assembly Instructions 07

IV. Exercise Guide 16

V. Warranty 18

I. IMPORTANT SAFETY INSTRUCTIONS

The proper utilization of Pilates equipment can enhance the execution of numerous Pilates exercises in a secure and efficient manner. Nevertheless, it is crucial to exercise care and caution due to the potential risks associated with exercise equipment, particularly when spring resistance is involved.

If you lack experience or are using this equipment for the first time, it is essential to have a trained professional supervise your usage. It is important to ensure that both you and your clients/patients have received adequate instruction on the appropriate and safe utilization of this equipment.

Equipment Safety Instructions:

1. Ensure the equipment is placed on a stable and level surface.
2. For optimal performance, allow at least 1m of clear space on either side of the Reformer.
3. Assemble the equipment following the manufacturer's instructions and make sure all parts are securely fastened.
4. Regularly inspect the equipment for any loose or damaged components. Do not use if any parts are broken or malfunctioning.
5. Be careful of fingers from folding/unfolding and moving the carriage.

User Precautions:

1. Consult a qualified healthcare professional before starting any new exercise program, especially if you have any medical conditions, injuries, or are pregnant.
2. Wear comfortable workout attire that allows for freedom of movement.
3. Keep body, clothing and hair free from all moving parts.
4. Remove any jewellery, watches, or accessories that could interfere with your workout or damage the equipment.
5. Start with a warm-up to prepare your body for exercise. Perform gentle stretches and mobilization exercises.
6. Familiarize yourself with the various parts of the reformer equipment, including the foot bar, carriage, straps, and springs.
7. Maintain proper form and alignment throughout your workout. Engage your core and keep your spine neutral.
8. Breathe naturally and avoid holding your breath during exercises.
9. Perform exercises within your comfortable range of motion. Avoid excessive or jerky movements that may cause injury.
10. Stop exercising if you feel pain, dizziness, or discomfort. Listen to your body and rest as needed.
11. This equipment is to be used by one person at a time. Do not allow children to use or be around equipment without adult supervision.

Equipment Usage:

1. Adjust the equipment settings, such as foot bar height and spring tension, according to your instructor's guidance and your fitness level.
2. Always check that the springs and straps are in good condition and securely attached before use.
3. Do not sit on carriage while adjusting levels.
4. Take care when attaching and detaching springs.
5. Place your hands and feet in the designated areas on the carriage and foot bar while performing exercises.
6. Use proper grip and control during exercises to ensure stability and avoid slipping.
7. Avoid sudden movements or excessive force that may cause the carriage to move uncontrollably.
8. Be mindful of the equipment's weight limit and do not exceed it.
9. The Pilates reformer should be set up on an even, flat, and hard surface. Placing it on carpet can create unevenness, and you may notice a slight bump or dip in the middle section during use.

⚠ IMPORTANT

Replace all springs every 24 months and spring clips every 12 months, or as needed within that period.

FAILURE TO PERFORM RECOMMENDED SAFETY CHECKS, OR USING EQUIPMENT WITH IMPROPERLY ADJUSTED, BROKEN OR WORN PARTS, COULD RESULT IN SERIOUS BODILY INJURY.

Cleaning and Maintenance:

1. Clean the equipment regularly with a mild, non-abrasive cleanser and a soft cloth.
2. Inspect the equipment for any signs of wear or damage for example, springs, ropes and rollers. Do not use if parts are damaged.
3. All hardware should be checked every 2 months to make sure that every nut, bolt and fastener is secure. If, at any time, a component exhibits free play, its hardware needs to be properly re-tightened immediately.
4. Lubricate moving parts, such as wheels or springs, as recommended by the manufacturer.
5. Store the equipment in a dry and clean area when not in use.
6. Any spring that exhibits early signs of fatigue (for example, separation in coils) need to be replaced immediately. High-use facilities should replace springs more often.
7. Over time you may experience some minor "fraying" in the ropes. Fraying is completely normal and to be expected. Any ropes with excess fraying, tearing or other problems need to be replaced immediately.

II. PARTS LIST

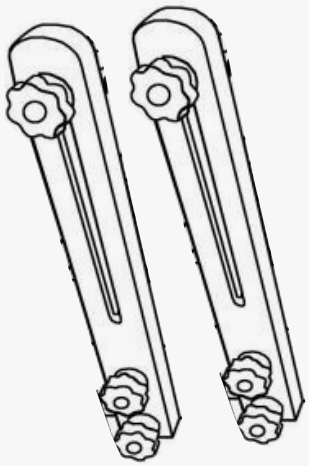

Risers (2x) and Lock Pin (6x)
(Pre-installed on Risers)

Rope (2x)

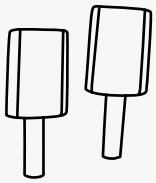

Carriage Stopper (2x)

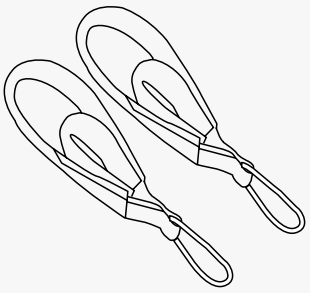

Feet/handle Strap (2x)

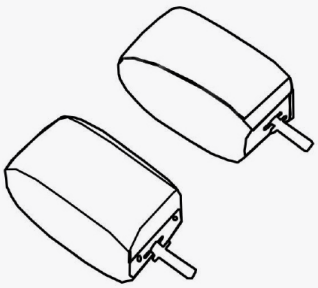

Shoulder Rest Block (2x)

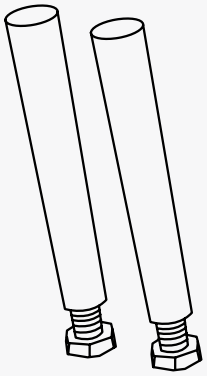

Handles (2x)

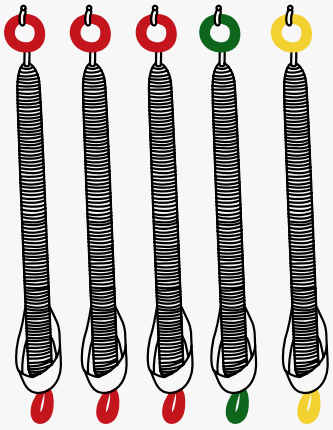

Springs
Red (3x), Green (1x),
Yellow (1x)

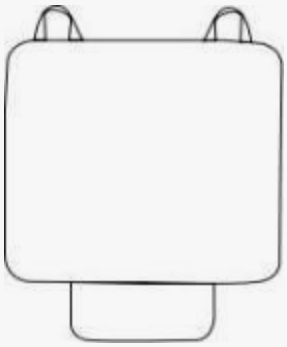

Jump Board (1x)

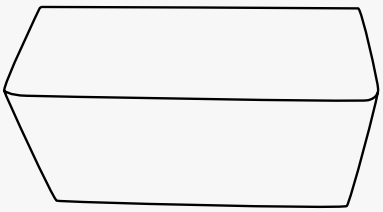

Box (1x)

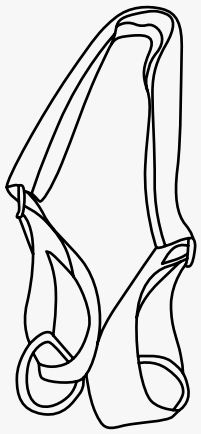

Foot Strap (1x)

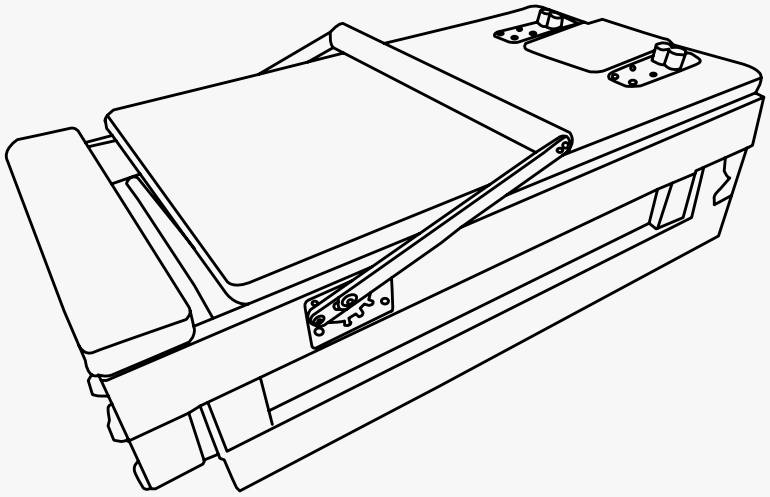

Reformer Frame

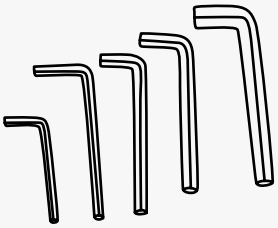

Allen Keys

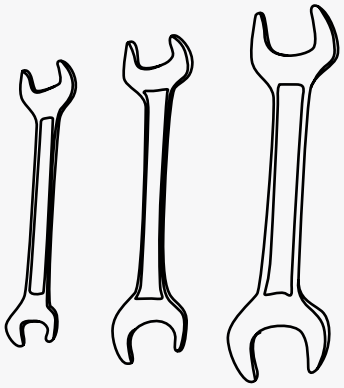

Wrenches

III. ASSEMBLY INSTRUCTIONS

UNPACK THE CARTON

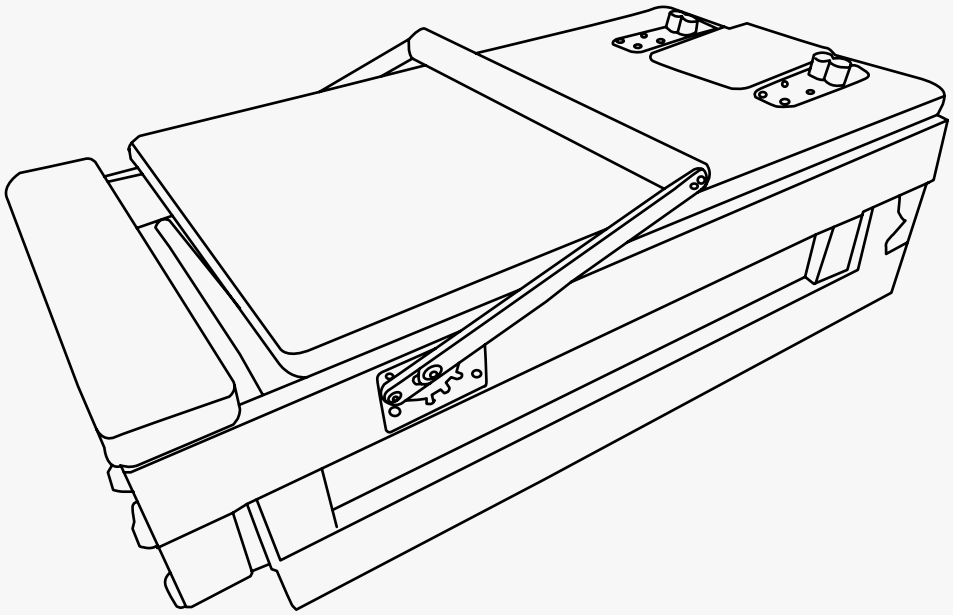

1. Remove the parts out of the carton. Ensure you have enough space for assembly.

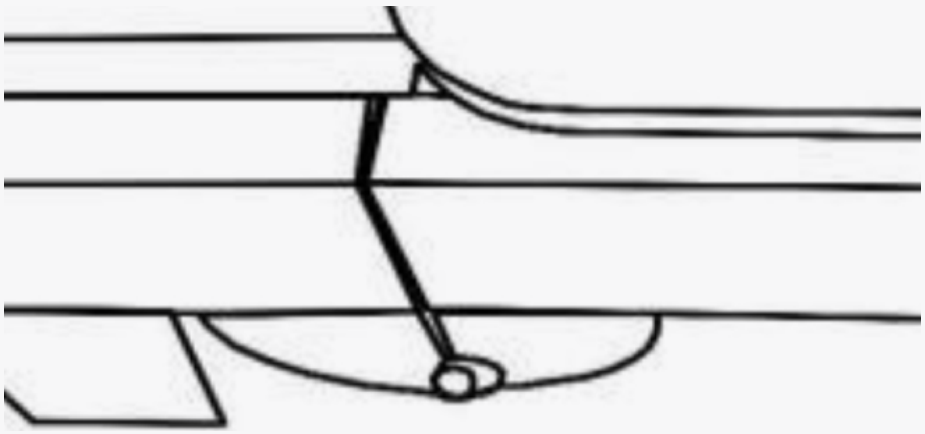

WARNING

Since no springs are attached, the carriage is not locked in position and may start to roll, be extra cautious when moving the unit.

2. Unfold the Reformer.

ASSEMBLE THE SPRINGS & ADJUSTING THE GEAR

FIG 1

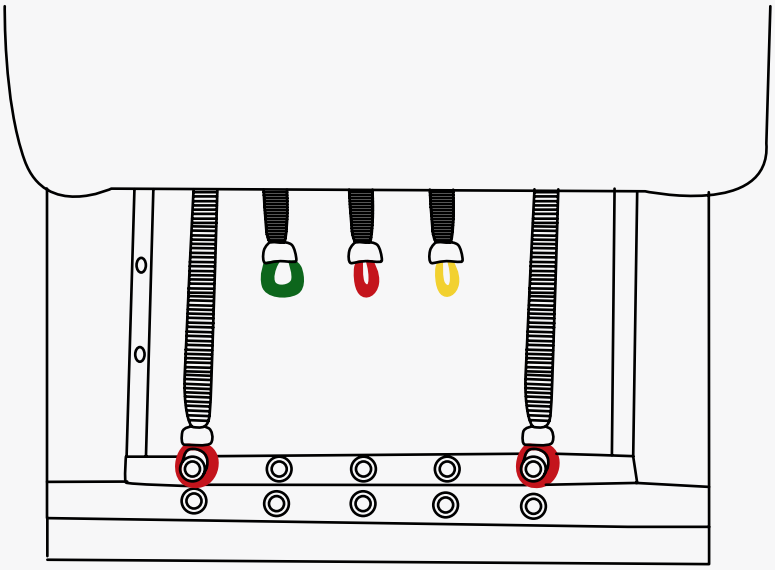

FIG 2

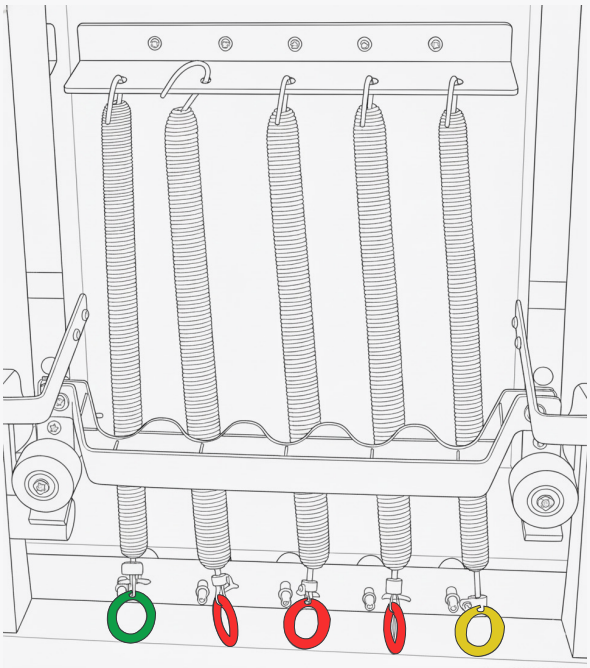

1. Hook the springs under the carriage (Fig 2) and on the Gear Selector (Fig. 1) as pictured. The order of the spring colours does not matter.

2. You have 10 gear slots (Fig. 1) to choose from.

Colour	Red	Green	Yellow
Load	Heavy	Medium	Light

! **WARNING:** At least one spring must be attached to the gear bar at all times.

ASSEMBLE THE CARRIAGE STOPPER

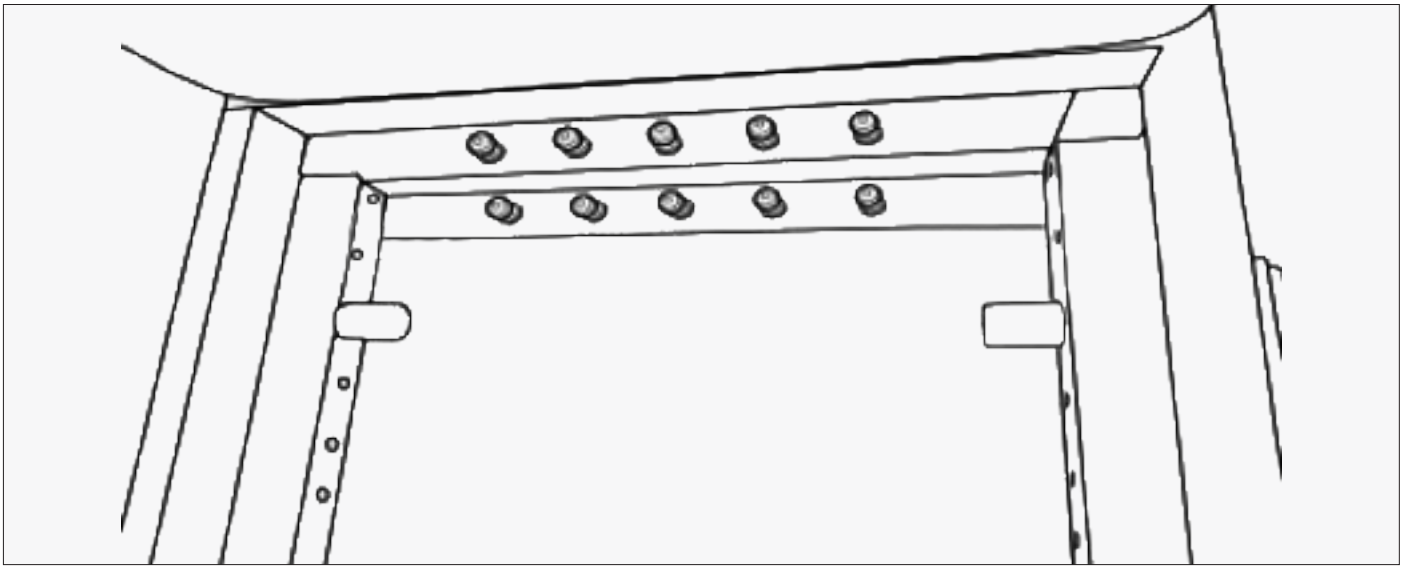

1. Insert the Carriage stopper on the inside of the reformer frame. You can chose from the slots there based off your height. Taller users may need to bring the stopper further away from the foot bar and gear section.

NOTE: There are only 3 stopper positions which are centred on the rail. The other two holes closest to the gear bar (which are not aligned to the 3 stopper holes) are screw holes and the last hole furthest from the gear bar is also a bolt hole. Do not place stoppers in these holes.

ASSEMBLE THE HANDLES AND SHOULDER REST BLOCKS

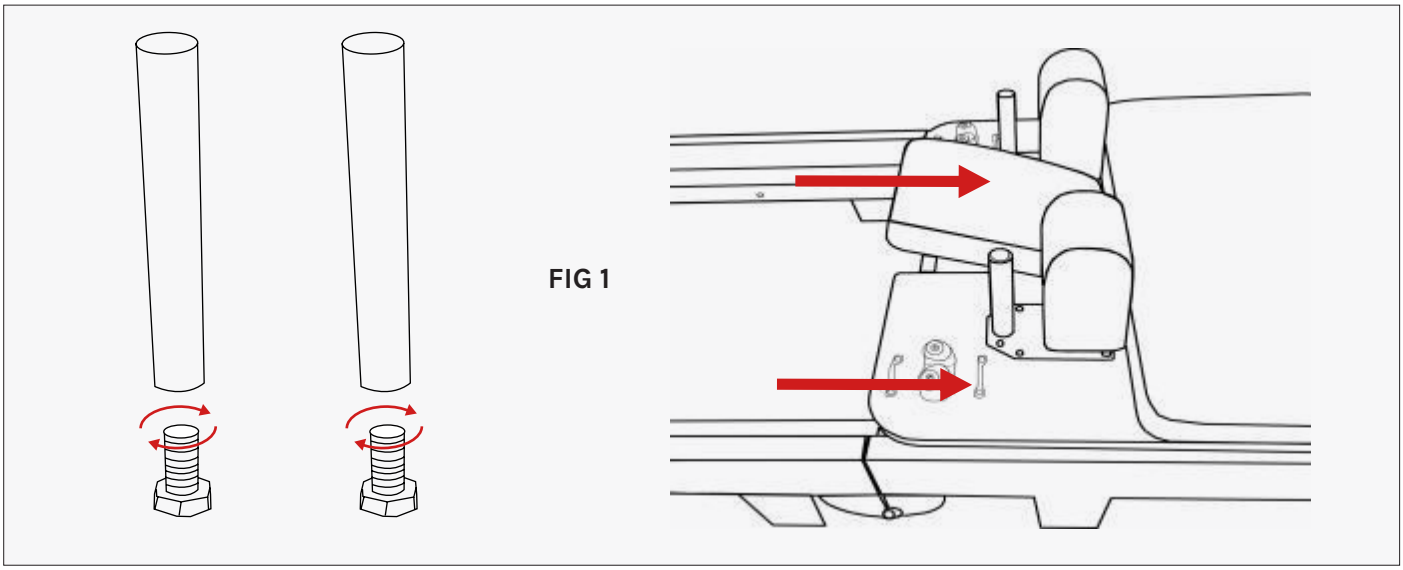

Handles

1. Unscrew the pre-installed bolt on the Handle. Line up the hole on the frame to the Handle and tighten underneath with the bolt. Repeat for the other side (Fig. 1).

Shoulder Rest

1. Slot the shoulder rests into the hole slots next to the Handles (Fig. 1).

ASSEMBLE THE RISERS AND ROPES

FIG 1

FIG 2

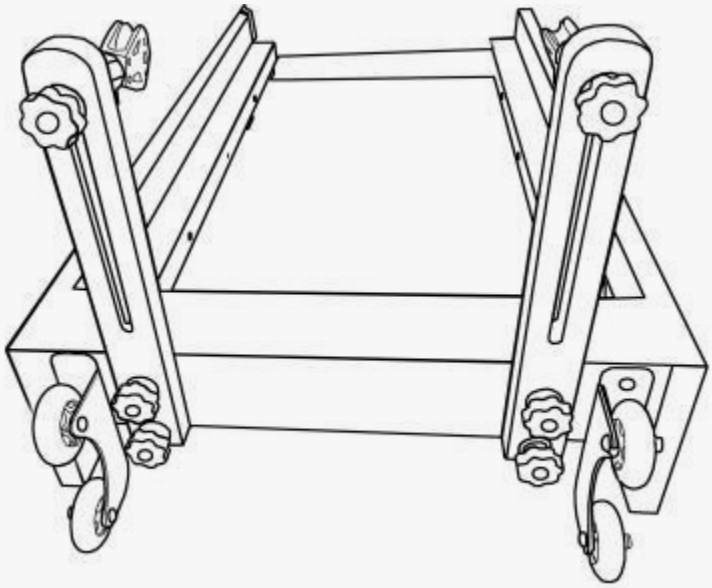

1. Unscrew the 2x knobs at the bottom of the Riser. Once the knobs are removed, place the Riser on the frame (next to wheels) and align the holes. Re-tighten with the same knob screws. Repeat for the other side (Fig. 2).

2. You can adjust the pulley height by unscrewing the knob at the back, sliding to preferred position and re-tighten knob. Make sure they are even on both sides.

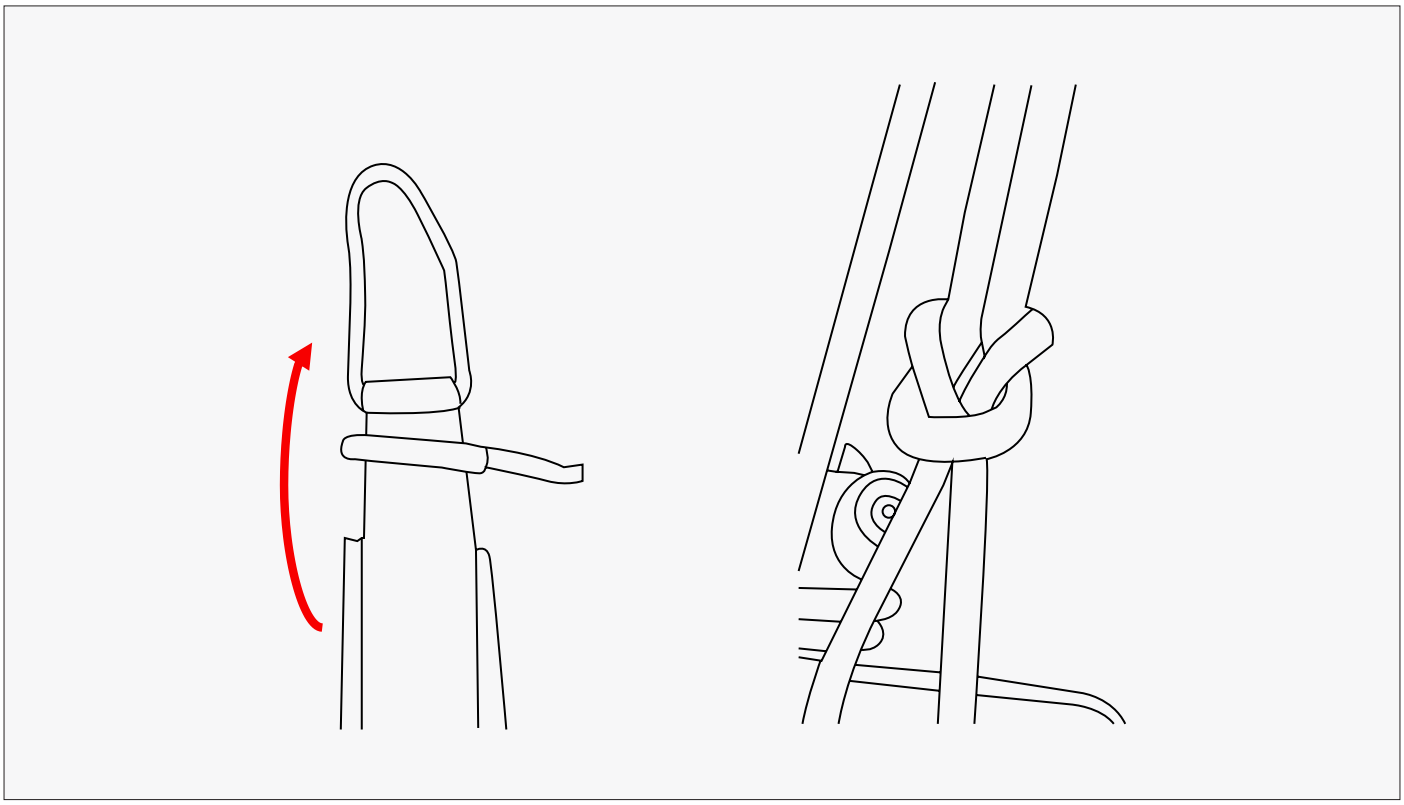

3. Attach the handle strap to the looped end of the rope to form a loop-to-loop knot. Repeat for the other rope then rest your handles on the shoulder blocks.

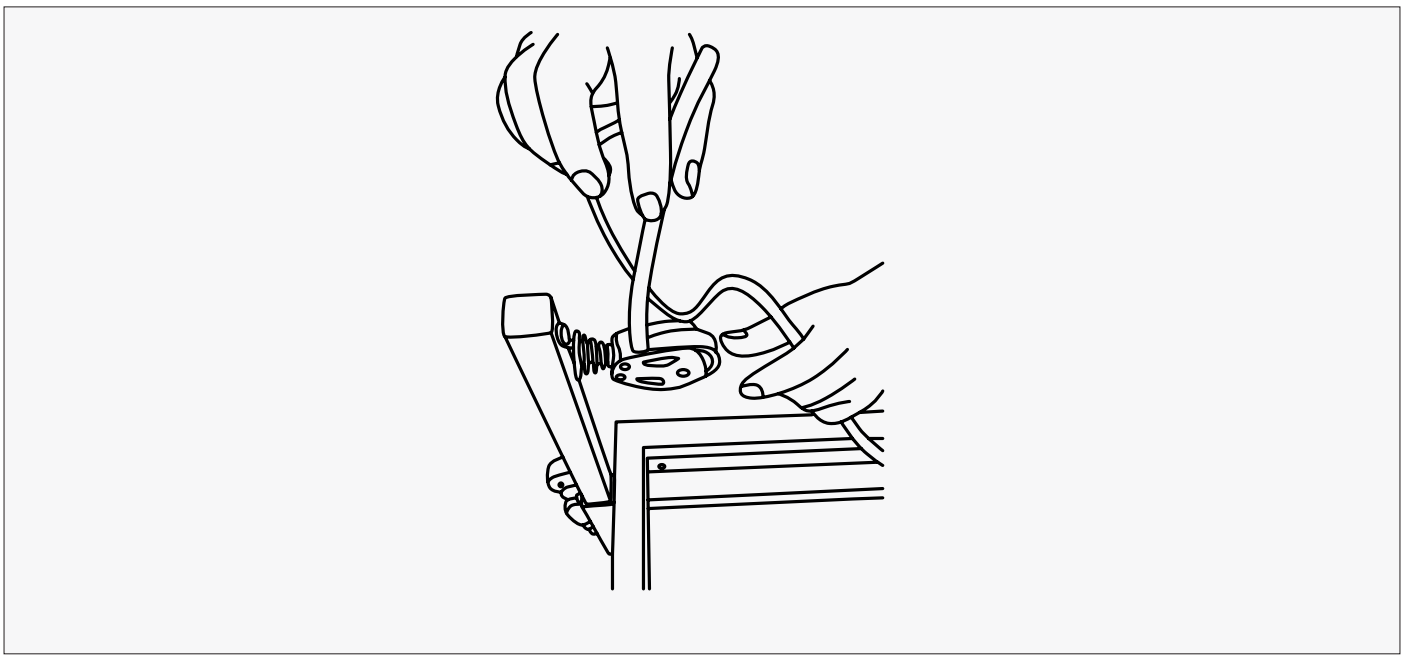

4. Feed the other end of the rope into the pulley on the risers.

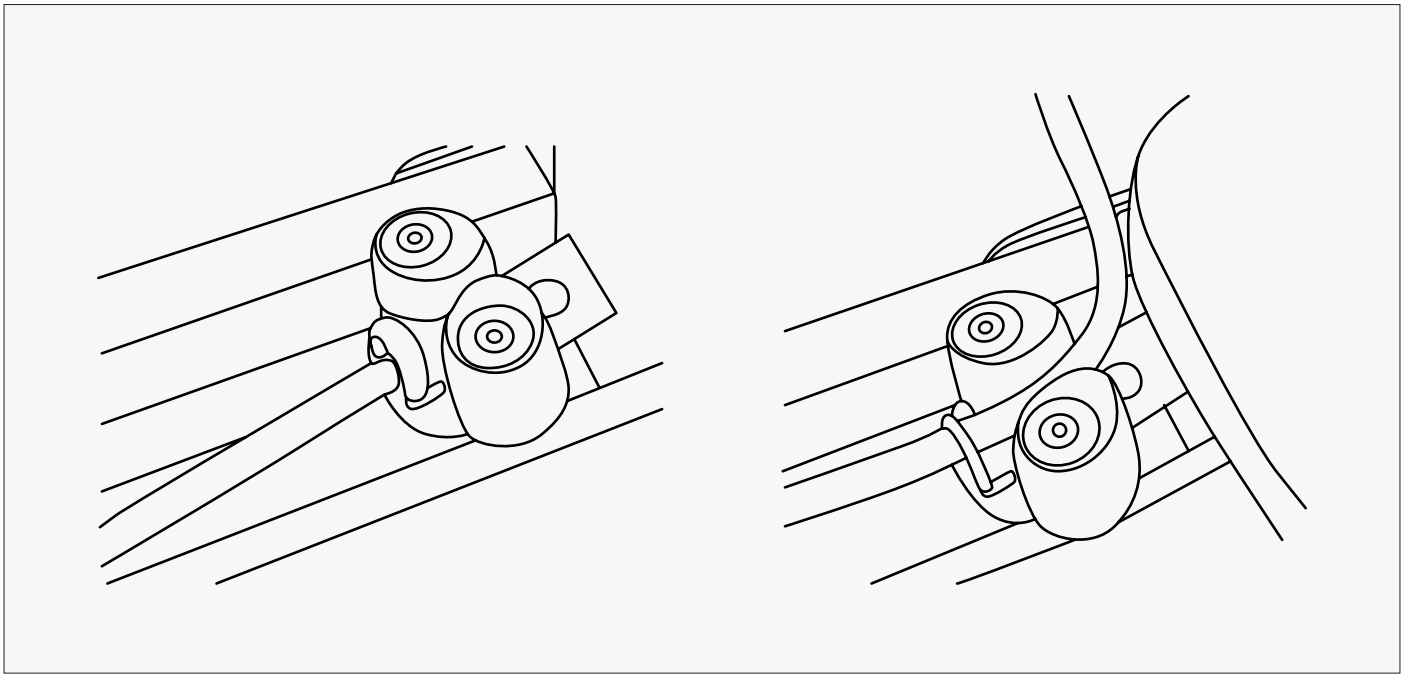

7. Then insert them into the rope clamps on the carriage to your preferred length and according to the exercise you wish to perform.

NOTE: Longer ropes create less tension and shorter ropes create more tension.

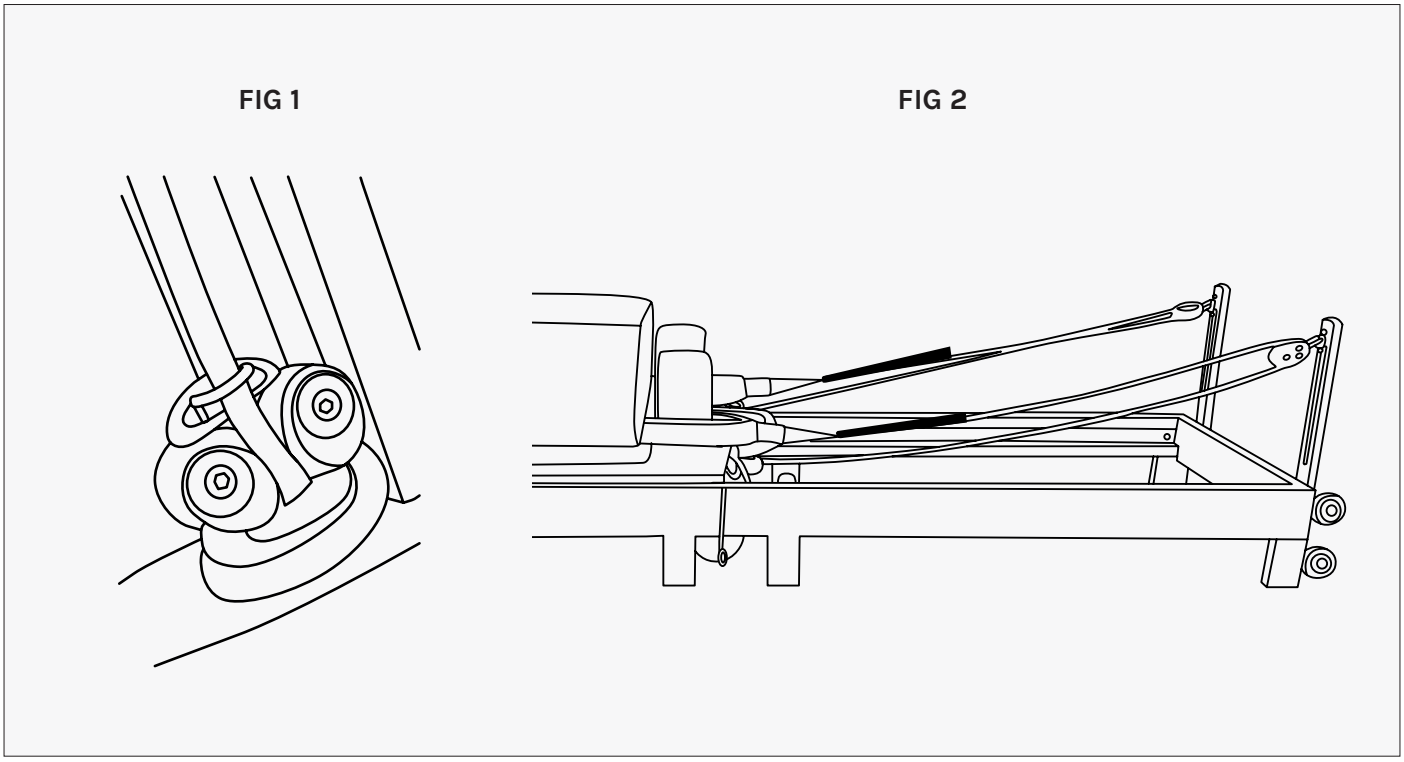

8. For the excess ropes, wrap them around the clamp (Fig. 1).

NOTE: Make sure that the ropes are adjusted to equal lengths and the ropes are properly secured. You can ensure they are even by placing them on the shoulder rest blocks and pulling the rope to the preferred length (Fig. 2).

ADJUSTING THE FOOT BAR

WARNING

Ensure that the rod of the foot bar support bar is fully engaged in both of its positioning slots (left and right sides) before beginning any exercise. Failure to do so can result in serious injury.

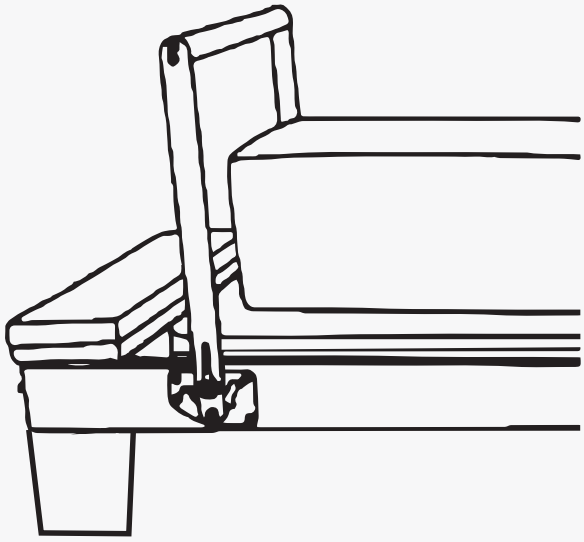

1. Lift up the Foot bar up and slot to preferred angle.

USING THE JUMP BOARD

FIG 1

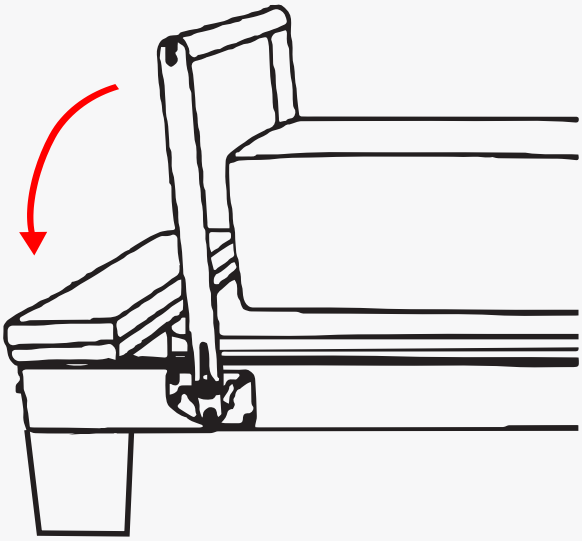

1. Move the foot bar to horizontal position (in line with the frame).

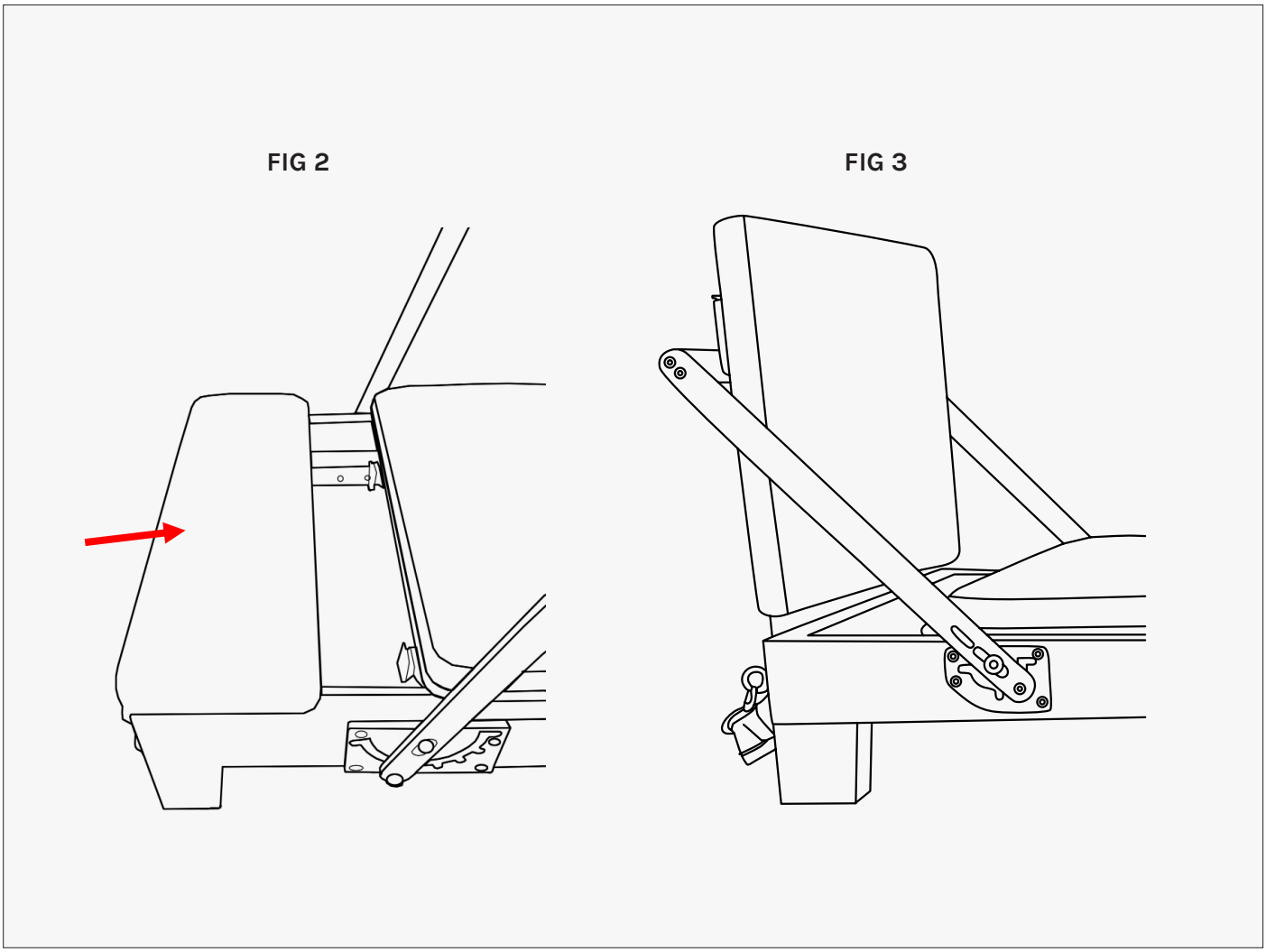

2. Take off the foot platform by pulling it up and out of slot.

3. Slot the jump board into the same slot and move the foot bar so it rests firmly behind the jump board (Fig. 3).

USING THE LONG/SHORT BOX

You can place the box on the Reformer vertically or horizontally under the shoulder rest according to your exercise.

ATTACHING THE FOOT STRAP

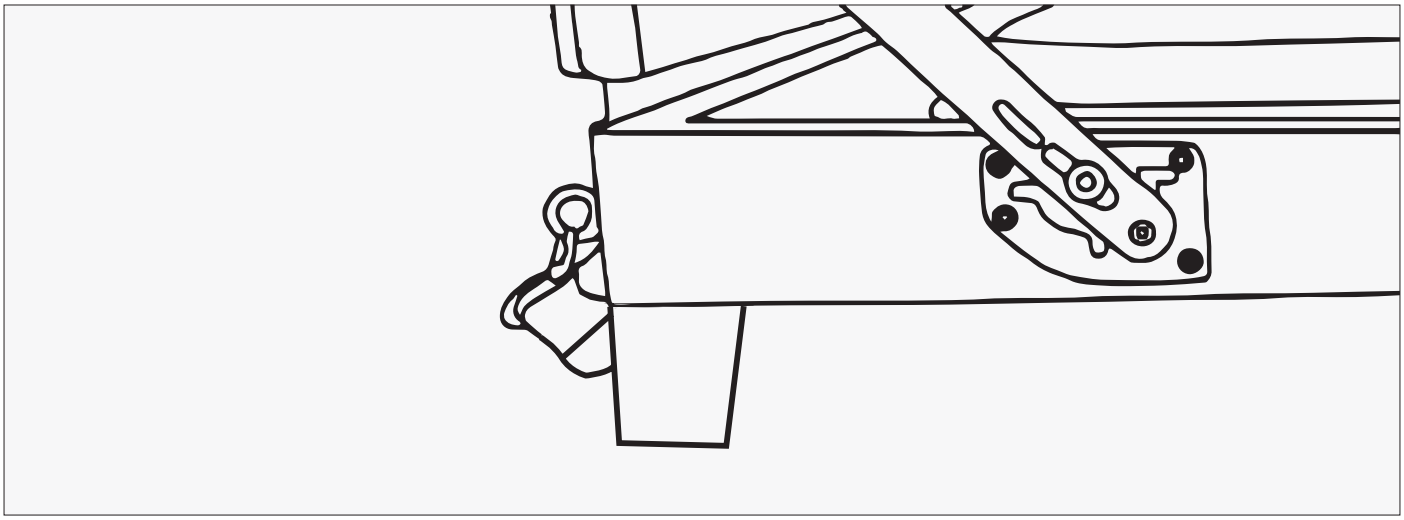

1. To use the foot strap, clip on the carabiner on the side of the foot platform then attach the (1x) Foot strap to the carabiner.

STORING THE REFORMER

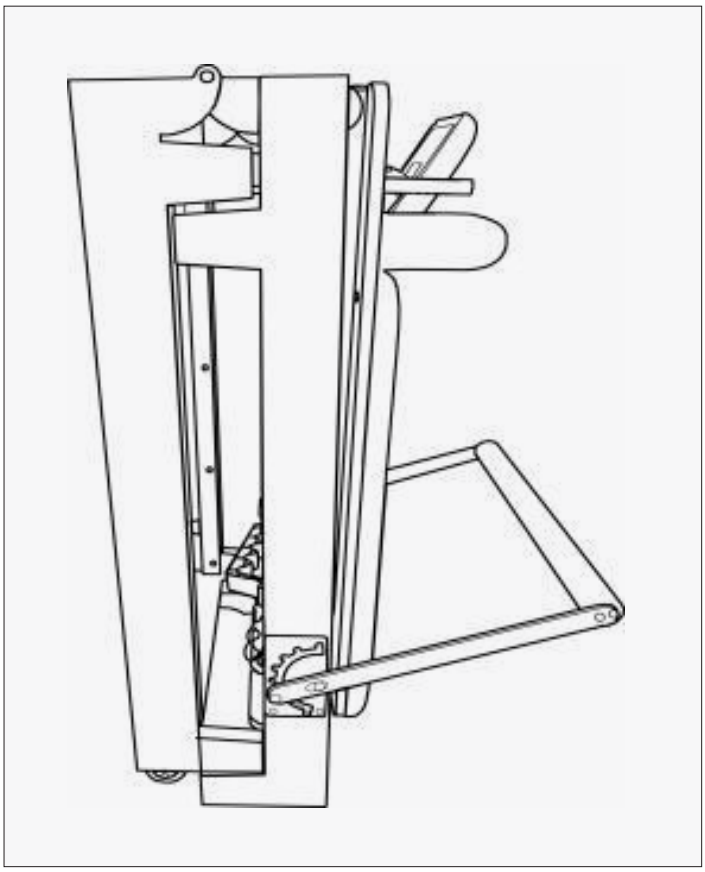

1. Remove the risers from the frame.

2. Move the carriage to side with the springs and hook a couple of the springs on to prevent it from sliding.

3. Fold the foot bar towards the head rest until its resting on the carriage. Head rest should be in flat position.

4. In the middle of the Reformer frame there is a handle. Hold onto the handle and start to pull the Reformer up until the wheels touch the ground and the Reformer is standing upright.

TIP: It is easier to lift the handle when you are inside the carriage frame, then step out of the frame as you start to lift the frame.

MOVING THE REFORMER

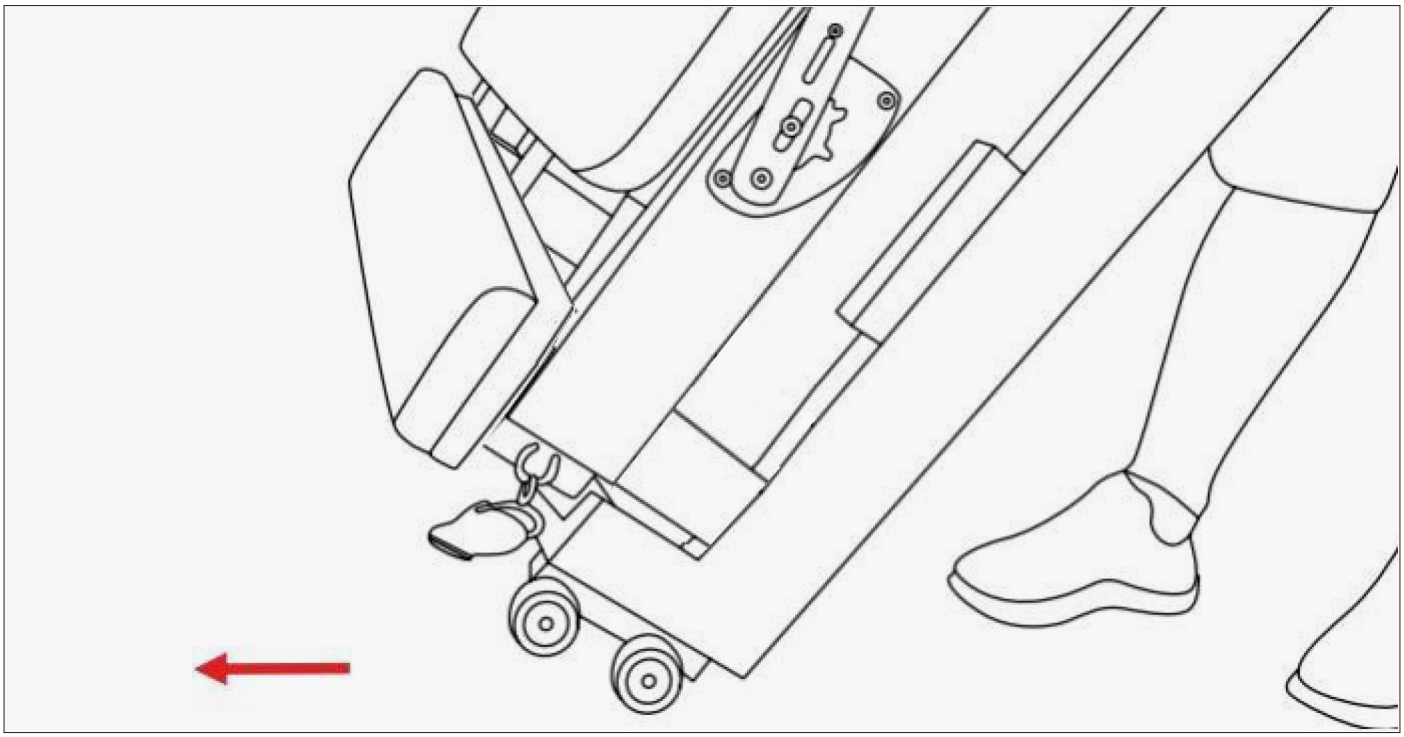

FOLDED:

1. To move the Reformer when it is folded, simply tilt it onto the transportation wheels below and move it to your desired location.

REPLACING SPRINGS

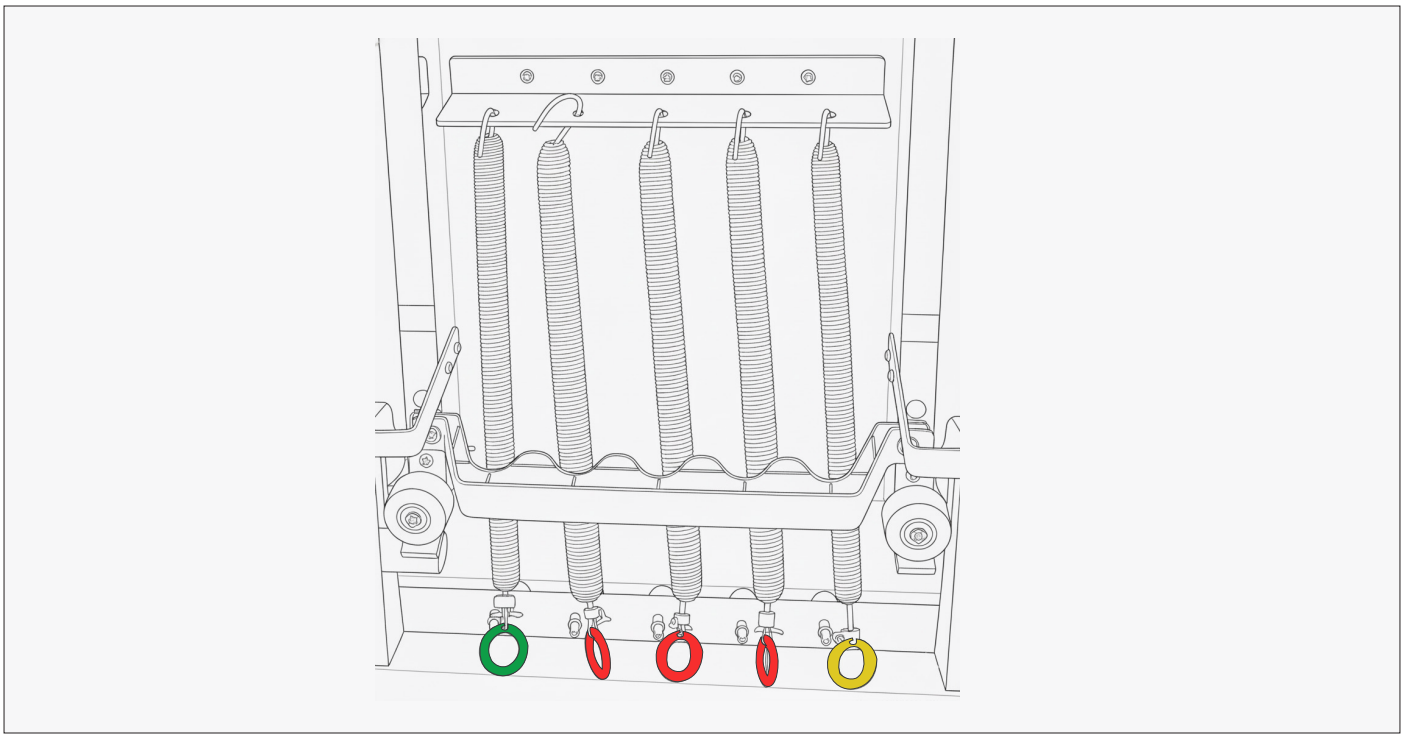

To replace worn springs simply unhook the springs from both ends.
Then simply re-hook the springs back on for the replacements.

IV. EXERCISE GUIDE

PLEASE NOTE:

Before beginning any exercise program, consult your physician. This is important especially if you are over the age of 45 or individuals with pre-existing health problems.

The pulse sensors are not medical devices. Various factors, including the user's movement, may affect the accuracy of heart rate readings. The pulse sensors are intended only as an exercise aid in determining heart rate trends in general.

Exercising is great way to control your weight, improving your fitness and reduce the effect of aging and stress. The key to success is to make exercise a regular and enjoyable part of your everyday life.

The condition of your heart and lungs and how efficient they are in delivering oxygen via your blood to your muscles is an important factor to your fitness. Your muscles use this oxygen to provide enough energy for daily activity. This is called aerobic activity. When you are fit, your heart will not have to work so hard. It will pump a lot fewer times per minute, reducing the wear and tear of your heart.

So as you can see, the fitter you are, the healthier and greater you will feel.

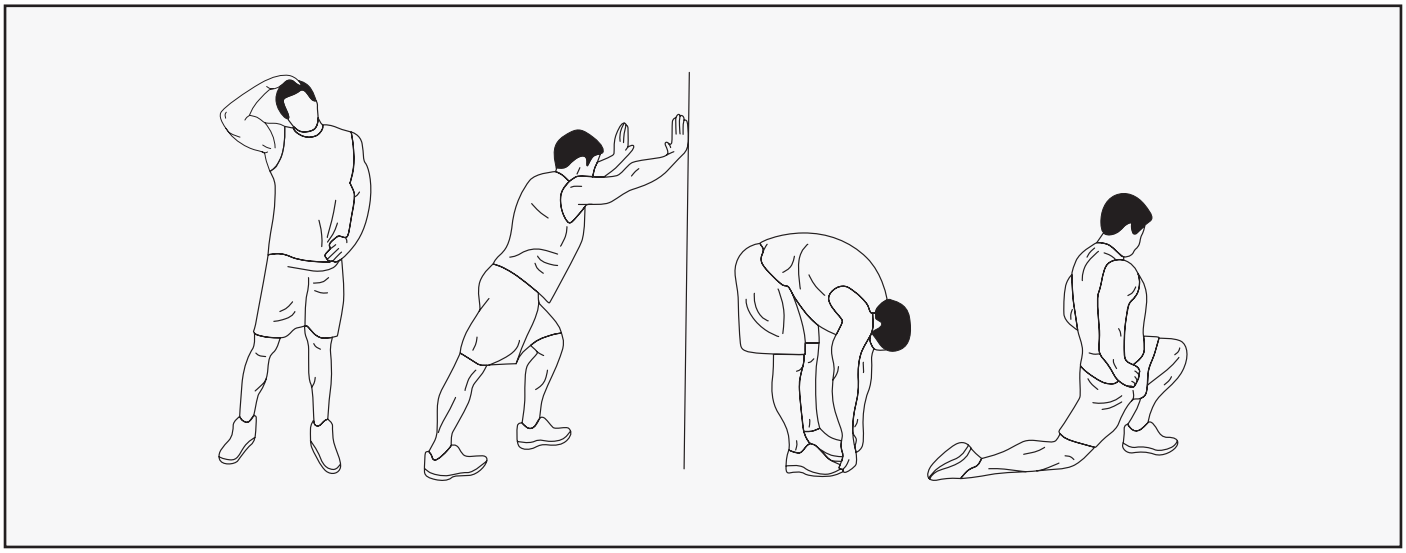

WARM UP

Start each workout with 5 to 10 minutes of stretching and some light exercises. A proper warm-up increases your body temperature, heart rate and circulation in preparation for exercise. Ease into your exercise.

After warming up, increase the intensity to your desired exercise program. Be sure to maintain your intensity for maximum performance. Breathe regularly and deeply as you exercise.

COOL DOWN

Finish each workout with a light jog or walk for at least 1 minute. Then complete 5 to 10 minutes of stretching to cool down. This will increase the flexibility of your muscles and will help prevent post-exercise problems.

WORKOUT GUIDELINES

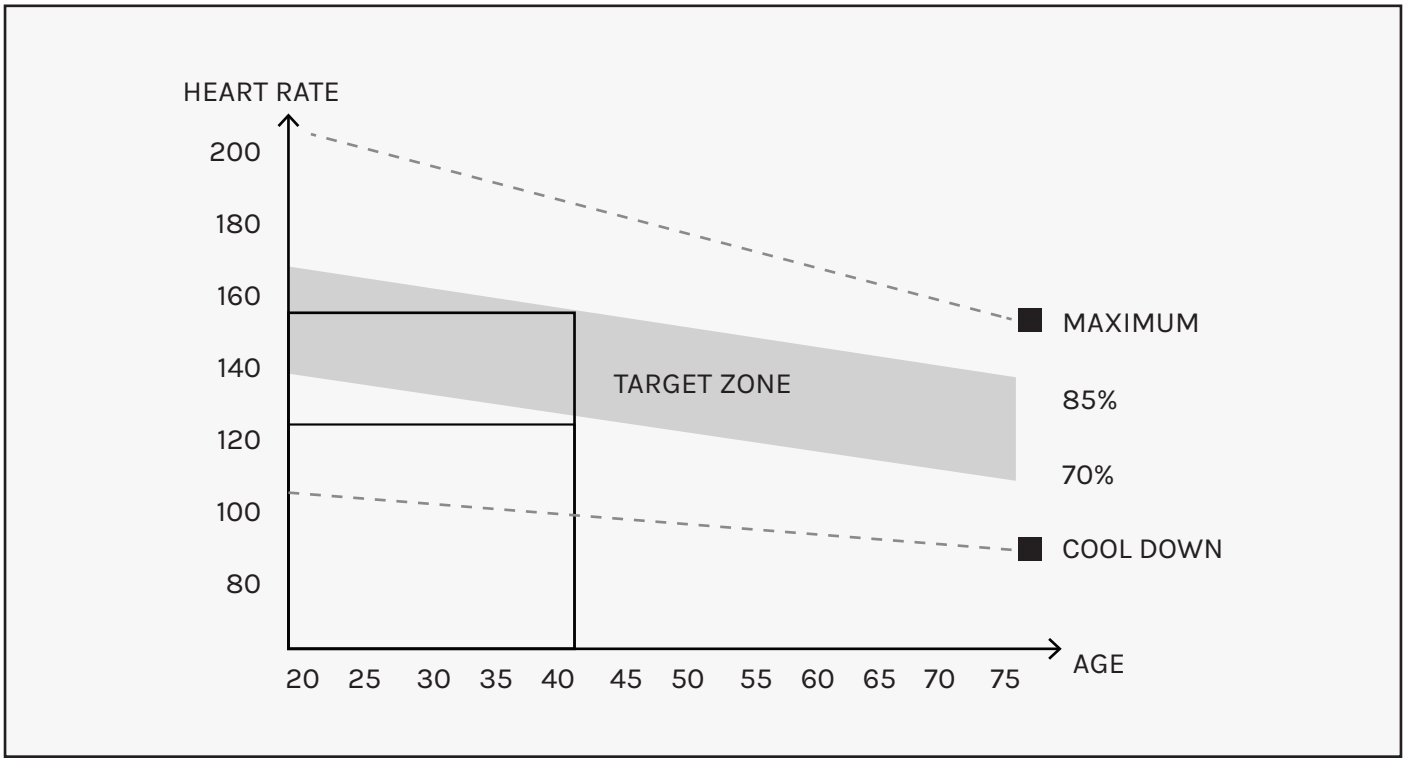

This is how your pulse should behave during general fitness exercise. Remember to warm up and cool down for a few minutes.

V. WARRANTY

AUSTRALIAN CONSUMER LAW

Many of our products come with a guarantee or warranty from the manufacturer. In addition, they come with guarantees that cannot be excluded under the Australian Consumer Law. You are entitled to a replacement or refund for a major failure and compensation for any other reasonably foreseeable loss or damage.

You are entitled to have the goods repaired or replaced if the goods fail to be of acceptable quality and the failure does not amount to a major failure. Full details of your consumer rights may be found at **www.consumerlaw.gov.au**.

Please visit our website to view our full warranty terms and conditions:
https://www.lsgfitness.com.au/pages/warranty

WARRANTY AND SUPPORT

Any claim against this warranty must be made through your original place of purchase.
Proof of purchase is required before a warranty claim may be processed.

If you have purchased this product from the Official Lifespan Fitness website, please visit
https://www.lsgfitness.com.au/pages/user-manuals

For support outside of warranty, if you wish to purchase replacement parts or request a repair or service, please visit **https://www.lsgfitness.com.au/pages/warranty** and fill in our Repair/Service Request Form or Parts Purchase Form.

LSG

WWW.LSGFITNESS.COM.AU