ReGen8 Trio Outdoor - 3 Person Infrared Sauna (Carbonized)

USER MANUAL

Find the Digital Manual Online

Product may vary slightly from the item pictured due to model upgrades.

Read all instructions carefully before using this product. Retain this owner's manual for future reference.

NOTE:

This manual should not be used to guide your purchasing decision. Your product, and the contents inside its carton, may vary from what is listed in this manual. This manual may also be subject to updates or changes. Updated manuals are available through our website at www.lifespanfitness.com.au

TABLE OF CONTENTS

I. Important Safety Instructions **03**

II. Installation Procedure **04**

III. Assembly Instructions **05**

IV. Control Panel Operation **19**

V. Troubleshooting **23**

VI. Maintenance **24**

VII. Warranty **26**

I. IMPORTANT SAFETY INSTRUCTIONS

Warning for Australian Commercial Clients (Gyms/Spas): It is mandatory that after 4 hours of continuous operation, the sauna room shall be powered off for a cooling period of 1 to 2 hours prior to restarting. A minimum 2-hour shutdown is strongly advised.

For your safety, it is crucial to adhere strictly to the following precautions while using this product:

1. Ensure that children use the equipment under the supervision of an adult. Avoid playing with the equipment for safety reasons.

2. Do not insert objects such as fingers or sticks into the heating tube plate to prevent potential dangers.

3. Never pour water onto the equipment or the heating pipe (board).

4. Avoid using or storing flammable gases or liquids, such as hair spray, oil paint, gasoline, etc., in proximity to the equipment to prevent fire hazards.

5. Refrain from placing items inside or on top of the sauna.

6. Avoid touching the power control panel and any electrical components with wet hands to prevent the risk of electric shock.

7. It is strictly prohibited to use the equipment during thunderstorms to prevent electric shock.

8. Do not tilt the equipment and refrain from using sharp objects to strike it.

9. Shut down the equipment for half an hour after continuous operation for 4 hours.

10. Avoid operating the equipment in a prolonged high-temperature environment.

11. Exercise caution when using the equipment after consuming alcohol.

12. Individuals with hemophilia or a tendency to bleed should avoid using the equipment.

13. Consult your doctor before using if you are currently experiencing illness or taking medication.

14. Do not use the equipment immediately after intense exercise; wait until your body temperature returns to normal.

15. If you experience any discomfort, cease using the equipment immediately.

16. Mind your head when entering and exiting the equipment.

17. Do not sleep inside the equipment while it is in operation.

18. Refrain from using any bath products in the sauna.

19. Avoid touching the heating element to prevent burns.

20. Keep the seat timber dry to prevent damage.

21. Ensure the floor heater remains dry to prevent excessive sweat dripping.

22. **Internal Power Socket Warning:** Do not plug in or operate any device that exceeds 300W

WARNING: Covering the heater or infrared emitter poses a fire risk!
If you have any questions, please contact the supplier.

II. INSTALLATION PROCEDURE

a. Do not plug any other appliances into the outlet.

b. Install the sauna on a completely level surface.

c. Do not use water internally and wipe down after use. Keep the sauna floor dry by placing it on an elevated surface.

d. Do not store flammable objects or chemical substances near the sauna.

1. Structure of Carbon Fibre FAR Infrared Sauna

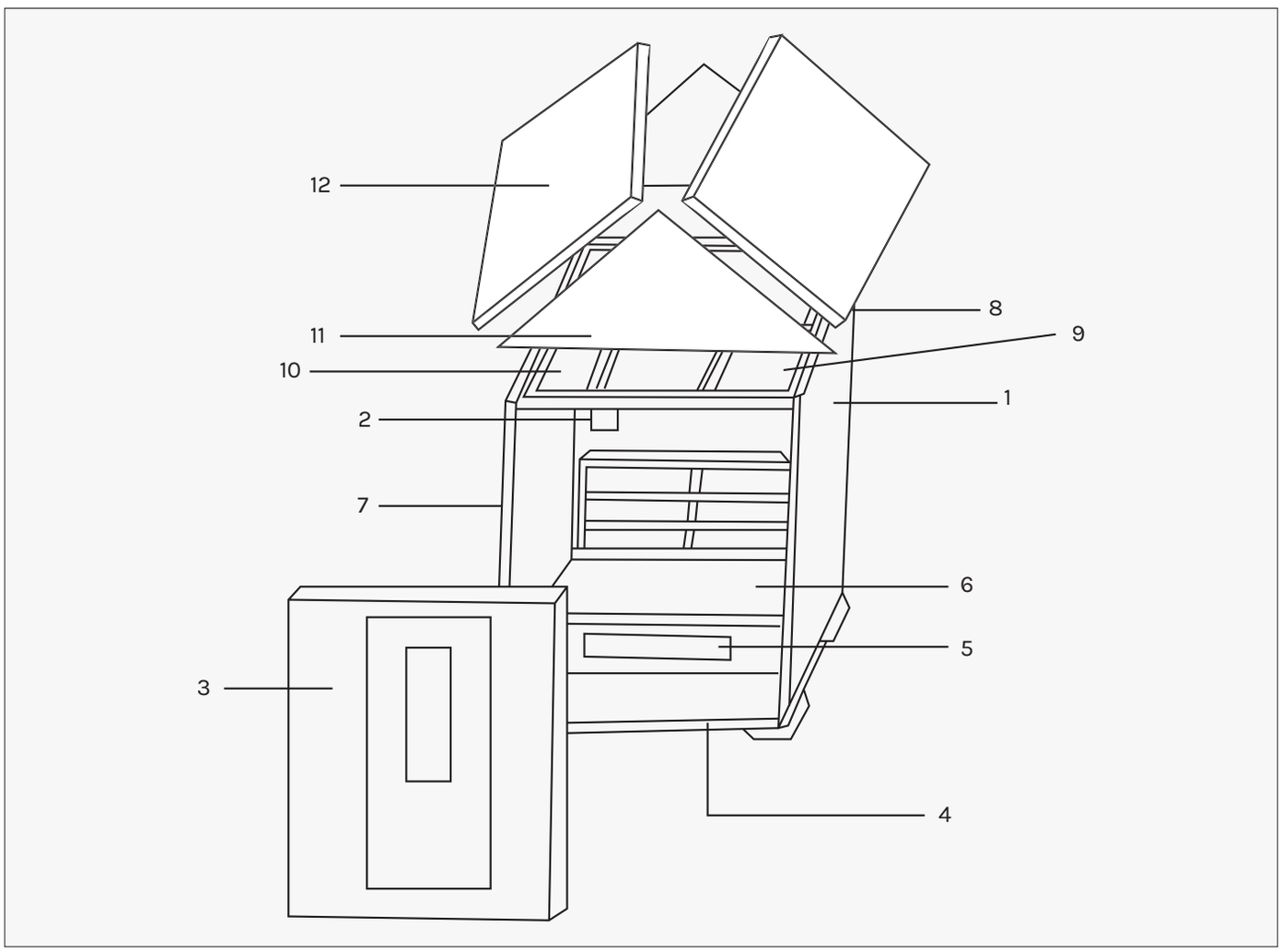

1. Right Side Panel
2. Digital Display
3. Front Panel
4. Bottom Panel
5. Bench Support
6. Bench
7. Left Side Panel
8. Back Panel
9. Internal Top Panel
10. Electric Control Box
11. Roof Panels: 2x triangle support, 2x side panels
12. Waterproof Tiles

Make sure all parts are present before installing the unit. See packing list below.

A. User Manual
B. Bottom Panel
C. Back Panel
D. Left Side Panel
E. Right Side Panel
F. Bench Support
G. Bench
H. Back Rest
I. Front Panel
J. Internal Top Panel
K. Oxygen Ionizer
L. Cup Holder
M. Magazine Bracket
N. Towel Bracket
O. Handle
P. 2x Roof Side Panels
Q. 2x Roof Triangle Support Panels

III. ASSEMBLY INSTRUCTION

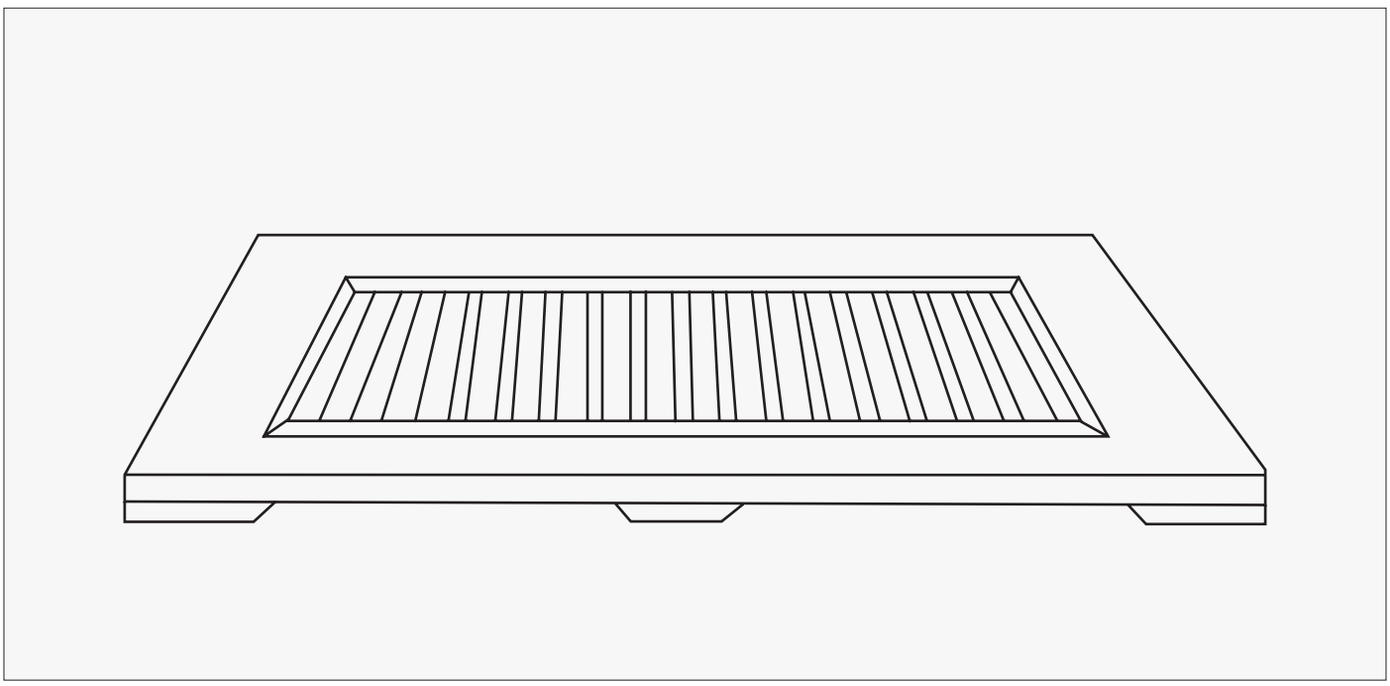

STEP 1. BOTTOM FLOOR ASSEMBLY

Place the bottom panel on a flat levelled surface of your desired location, and identify the front and back sections.

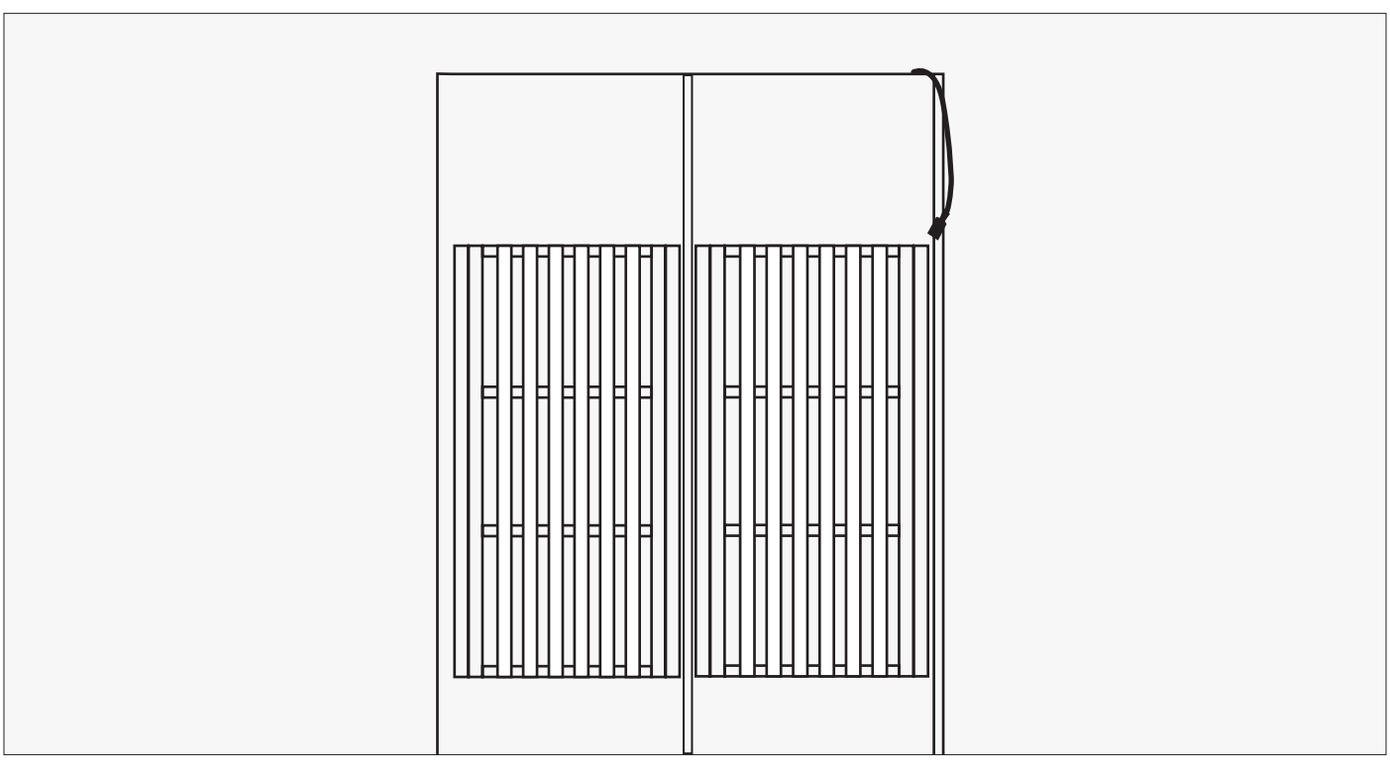

STEP 2. TAKE OUT THE RIGHT HALF OF THE BACK PANEL

Identify the right half of the back panel and prepare to install.

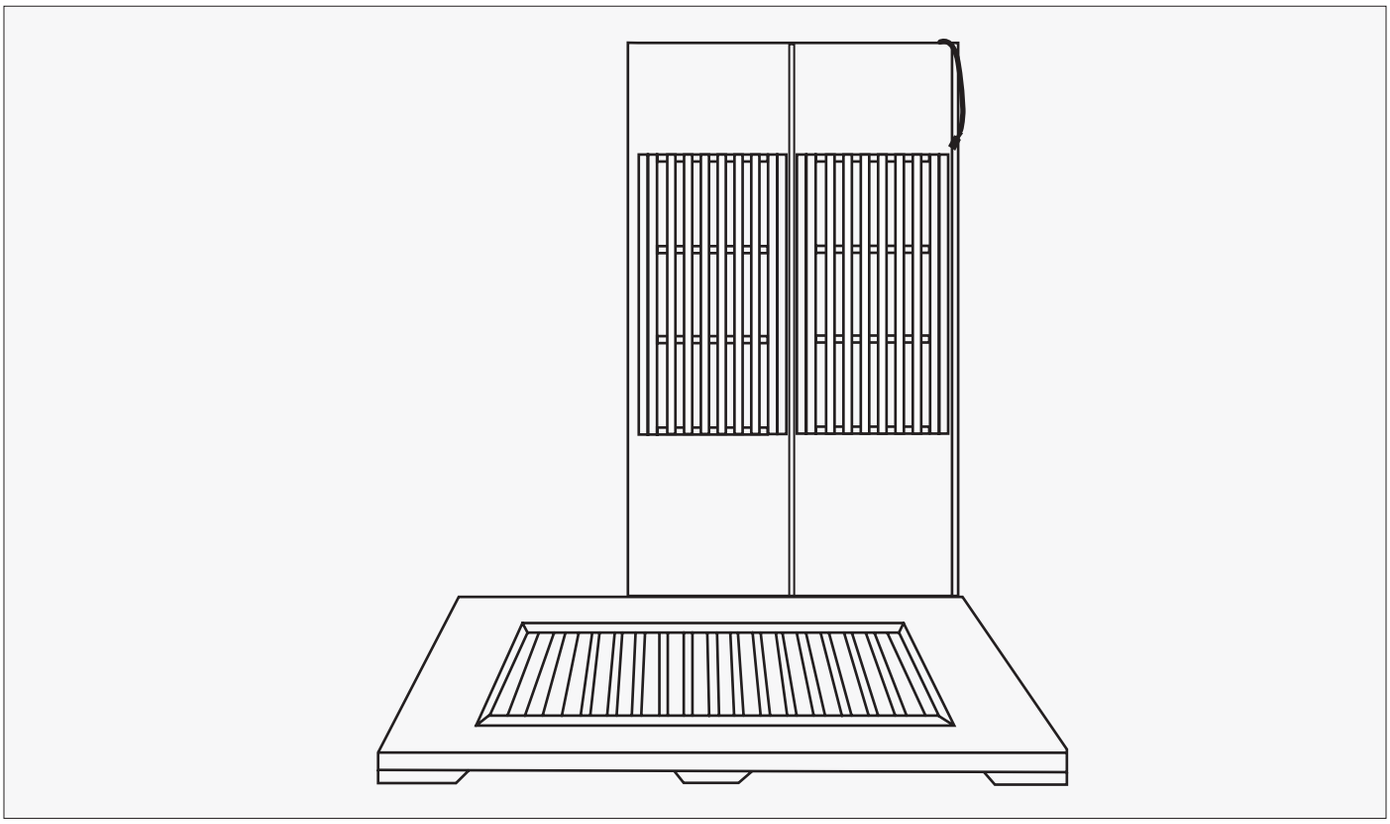

STEP 2.1. FIX THE RIGHT HALF OF THE BACK PANEL

Align the right half of the back panel with the bottom panel's corresponding battens

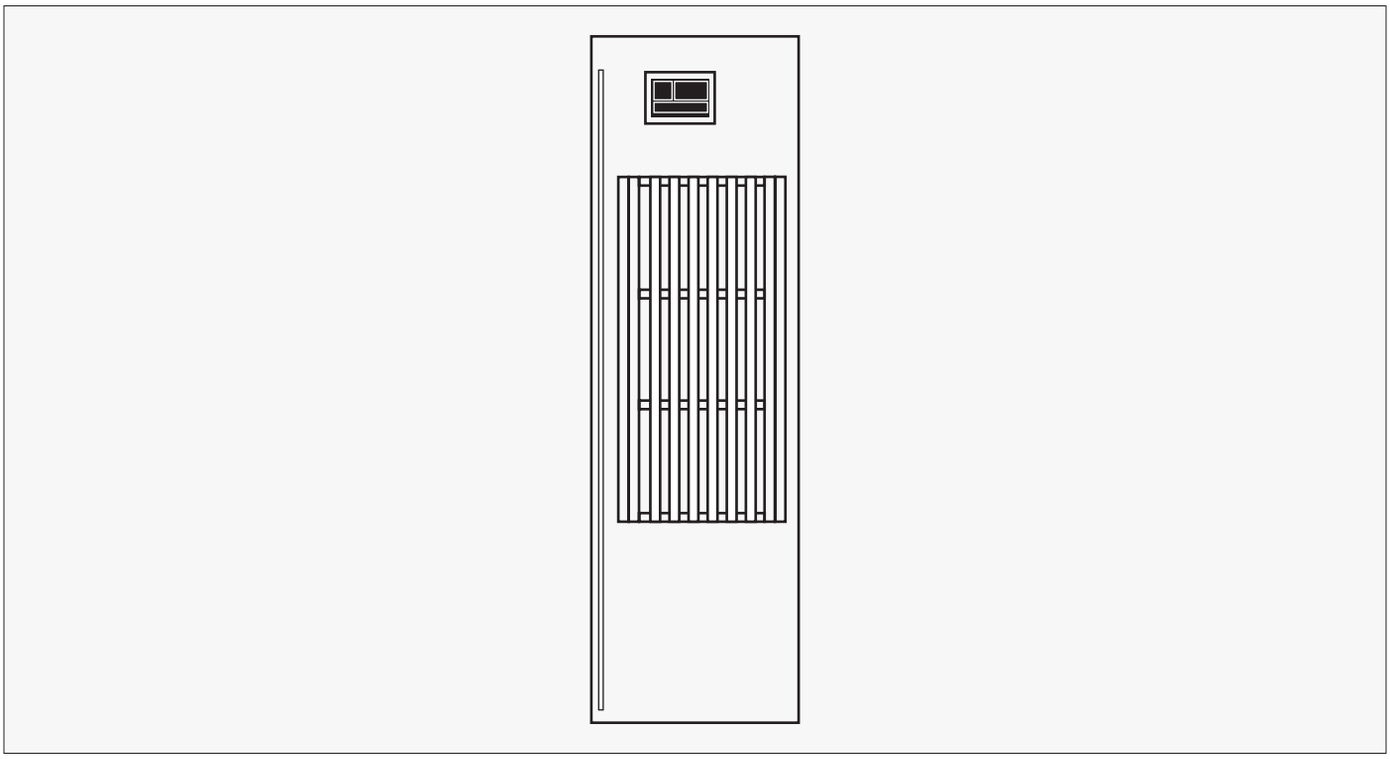

STEP 2.2. TAKE OUT THE LEFT HALF OF THE BACK PANEL

Identify the left half of the back panel and prepare to install.

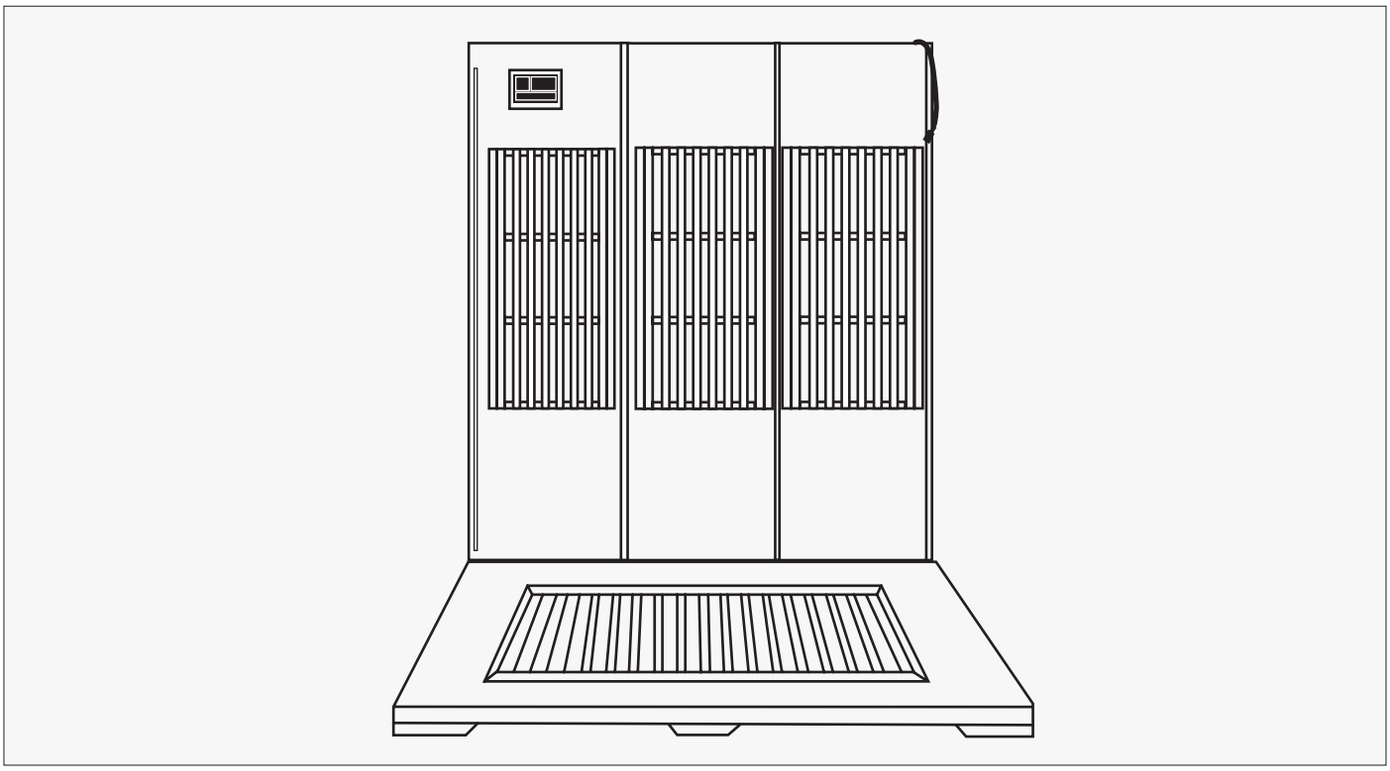

STEP 2.3. ASSEMBLING BACK PANEL

Align the left half of the back panel with the bottom panel's corresponding battens.

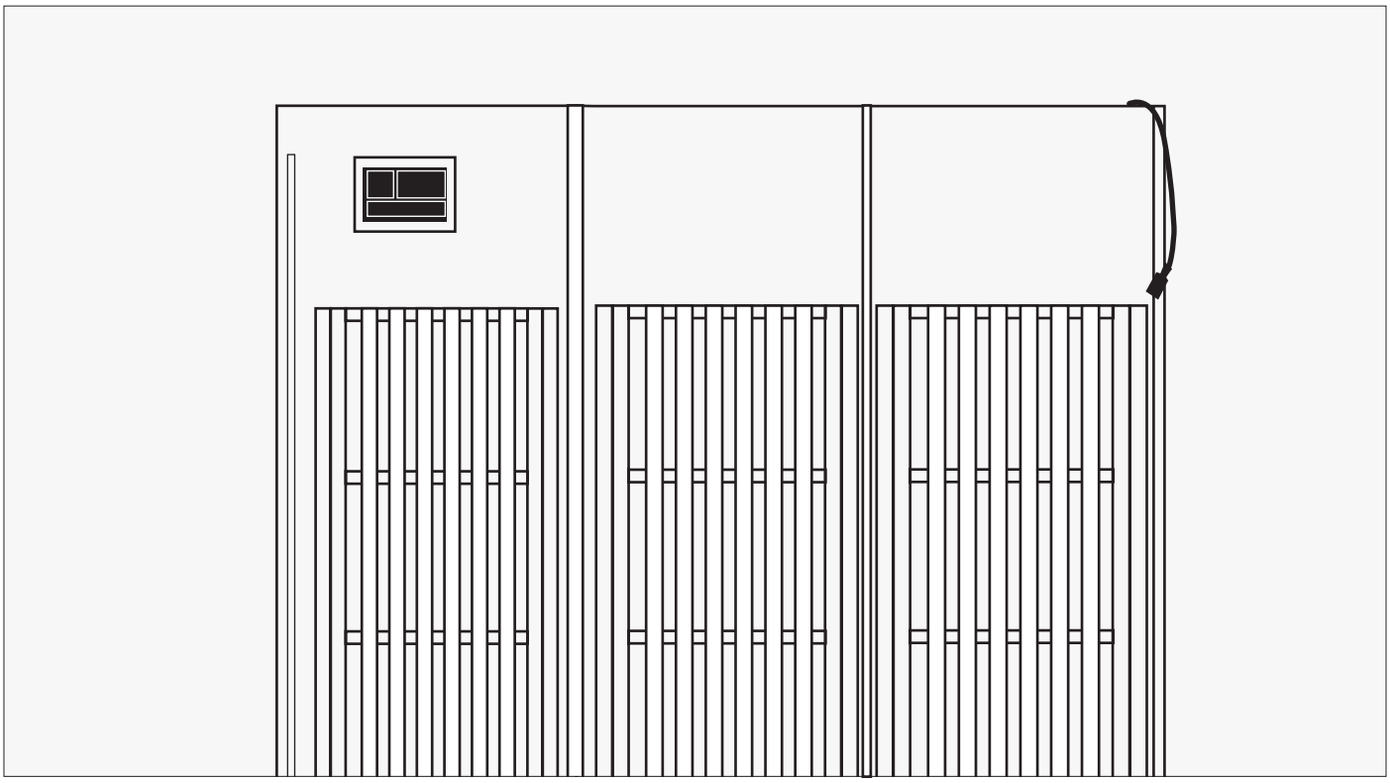

STEP 2.4. COVER THE GAP BETWEEN THE PANELS WITH WOODEN SLATS

Ensure that the two back panels are aligned and use the wooden slat to cover the gap.

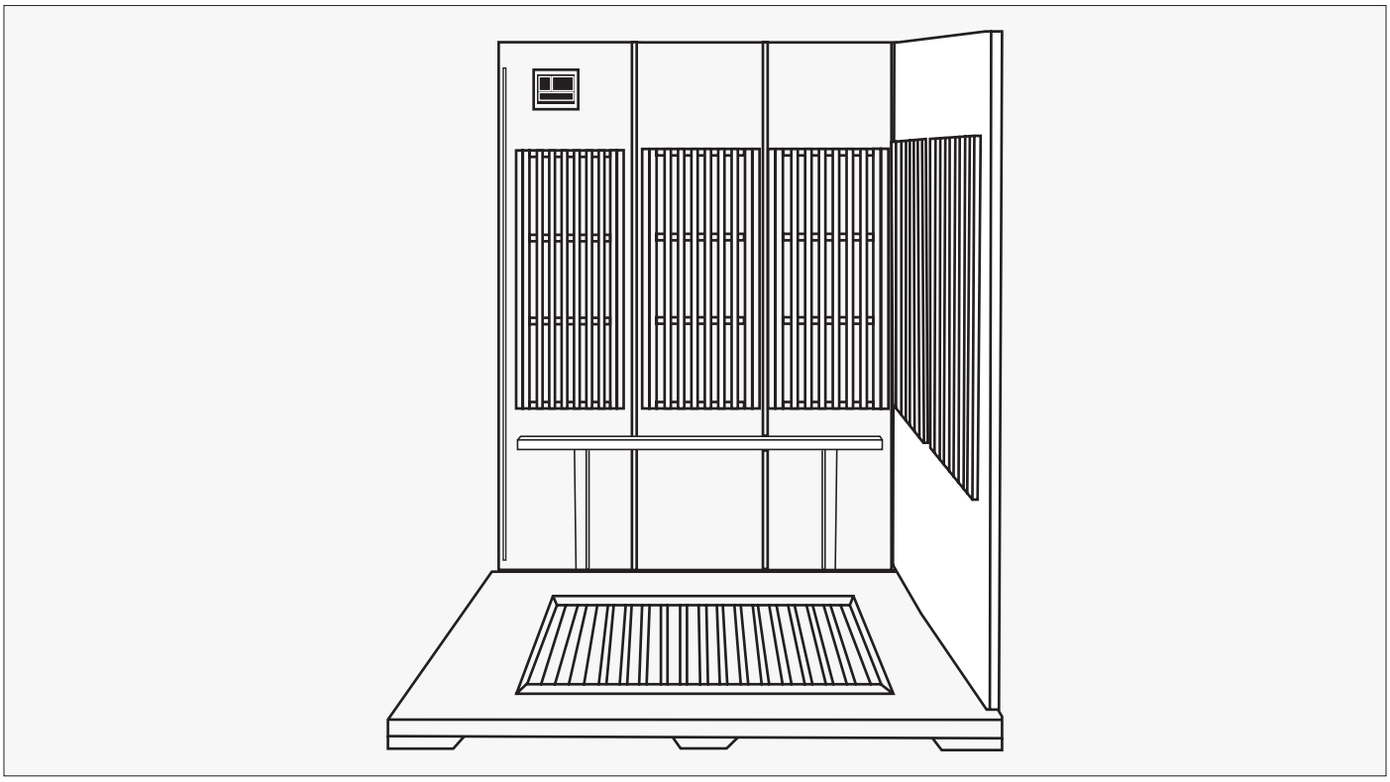

STEP 2.5. ASSEMBLE THE RIGHT PANEL

Align the right panel with bottom panel's corresponding battens. Ensure the right panel fits flush into the back panel.

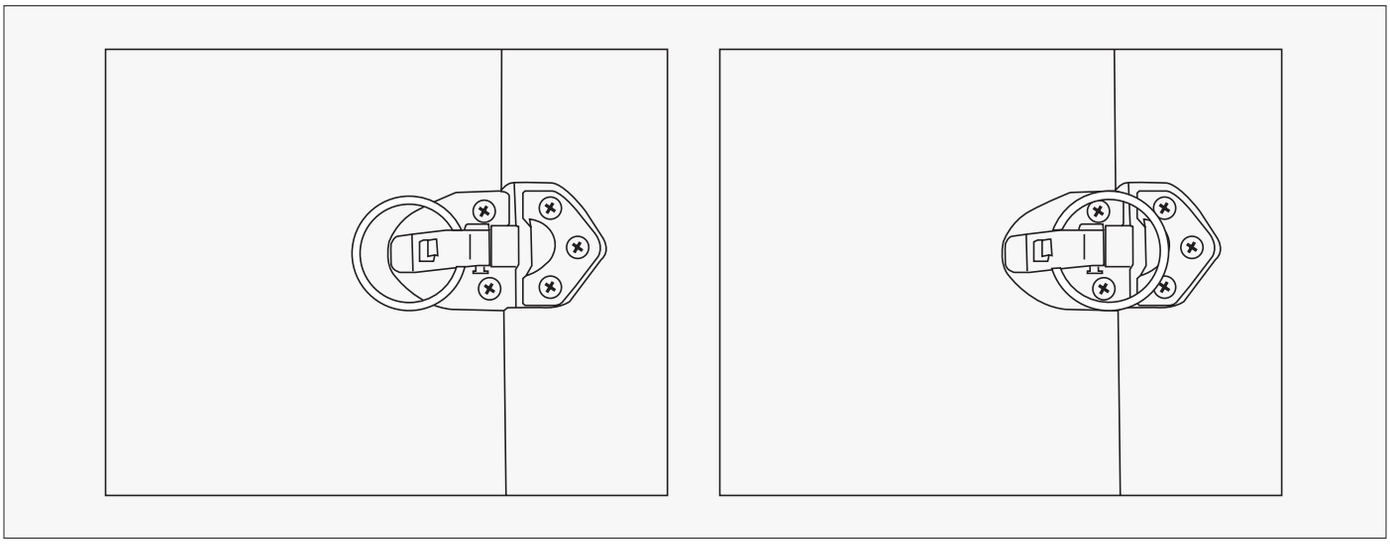

STEP 3. LATCH ASSEMBLY

The latch features a guide tab that needs to be aligned with the guide slot. Hold the back panel upright against the floor panel, carefully placing the tab into the slot without latching it yet. Once the back wall, front wall, and side wall are properly positioned on the floor panel, you can close and secure the latches with pins.

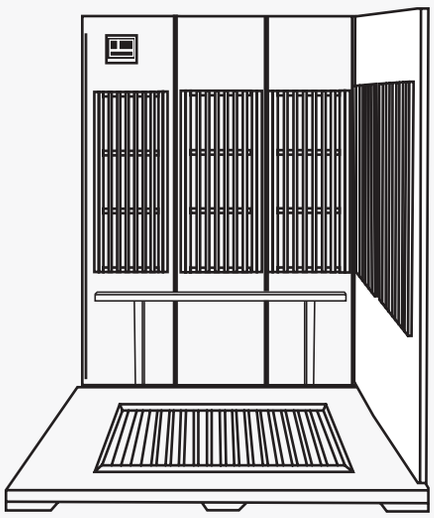

Fig. 6

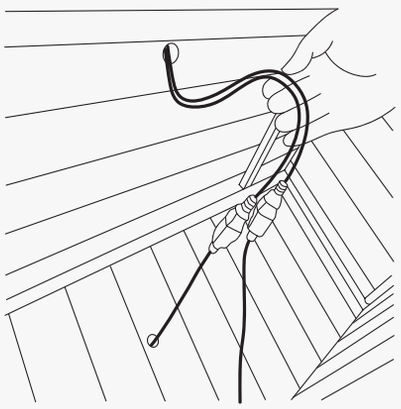

Fig. 7

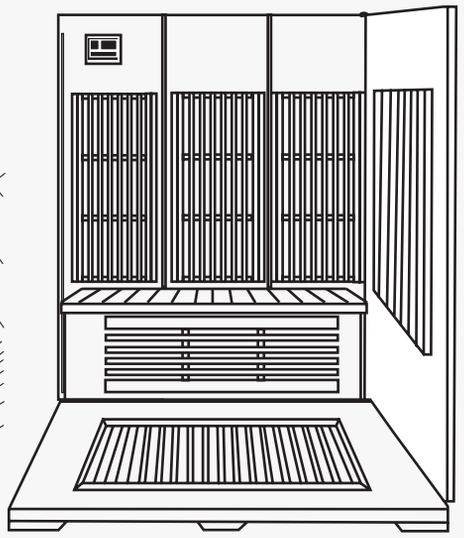

Fig. 8

STEP 4. BENCH CHAIR ASSEMBLY

Position the bench support with the heating element facing forward and slide it vertically into the slot til it touches the right panel. Next, connect the bench's heater element wire to the corresponding wire from the back wall. Then, place the bench by sliding it into position. Refer to Figures 6, 7, and 8.

NOTE: Ensure the wires are securely connected; otherwise, the heater will not function properly.

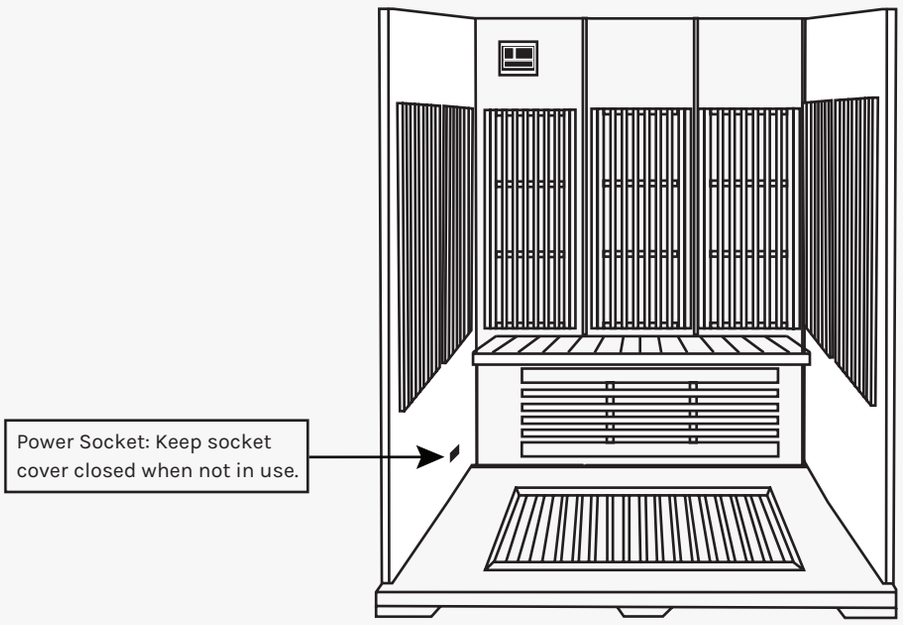

STEP 5. ASSEMBLE THE LEFT PANEL

Align the left panel with the bottom panel's corresponding battens. Ensure the left panel fits flush into the back panel.

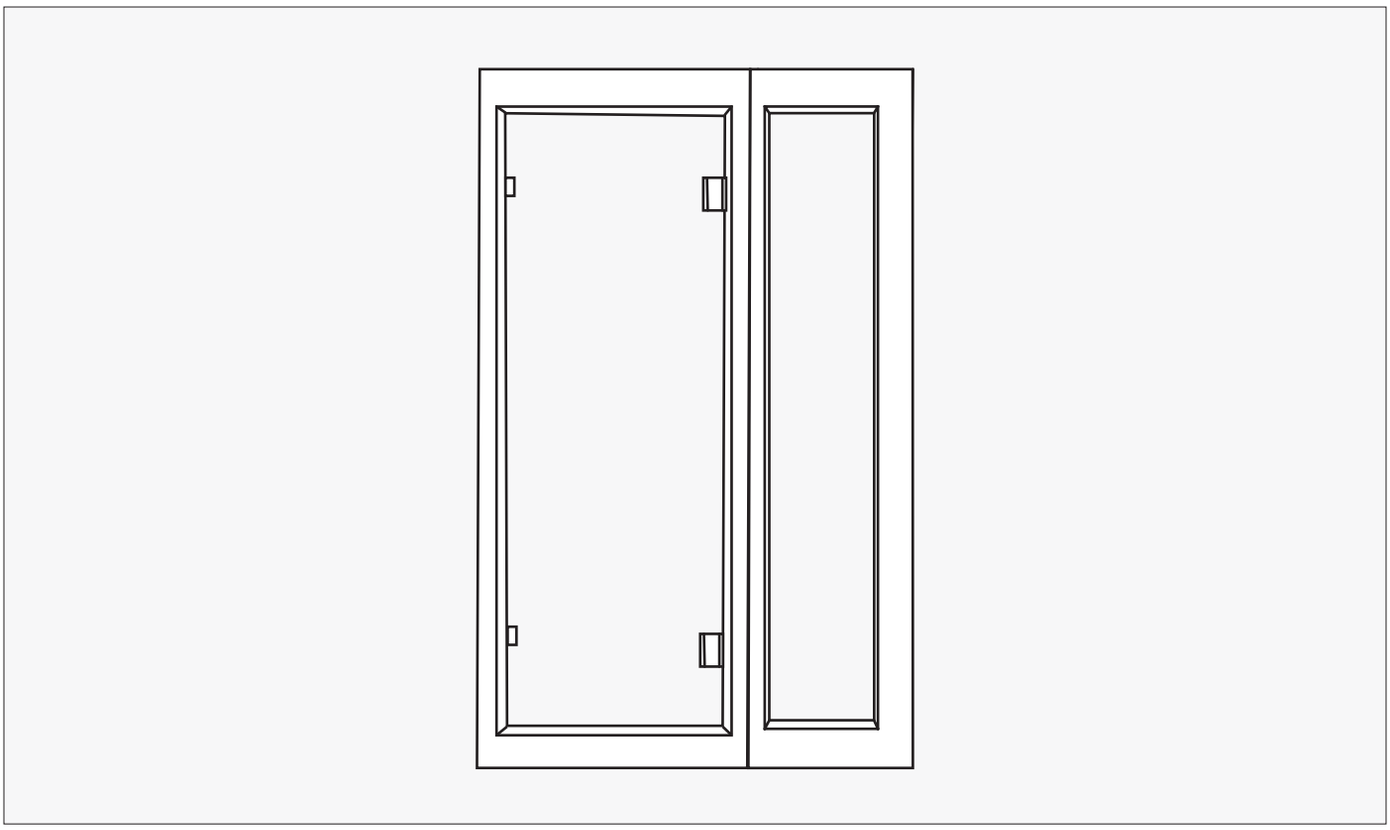

STEP 6. TAKE OUT THE RIGHT HALF OF THE GLASS DOOR

Identify the right half of the glass door and prepare to install.

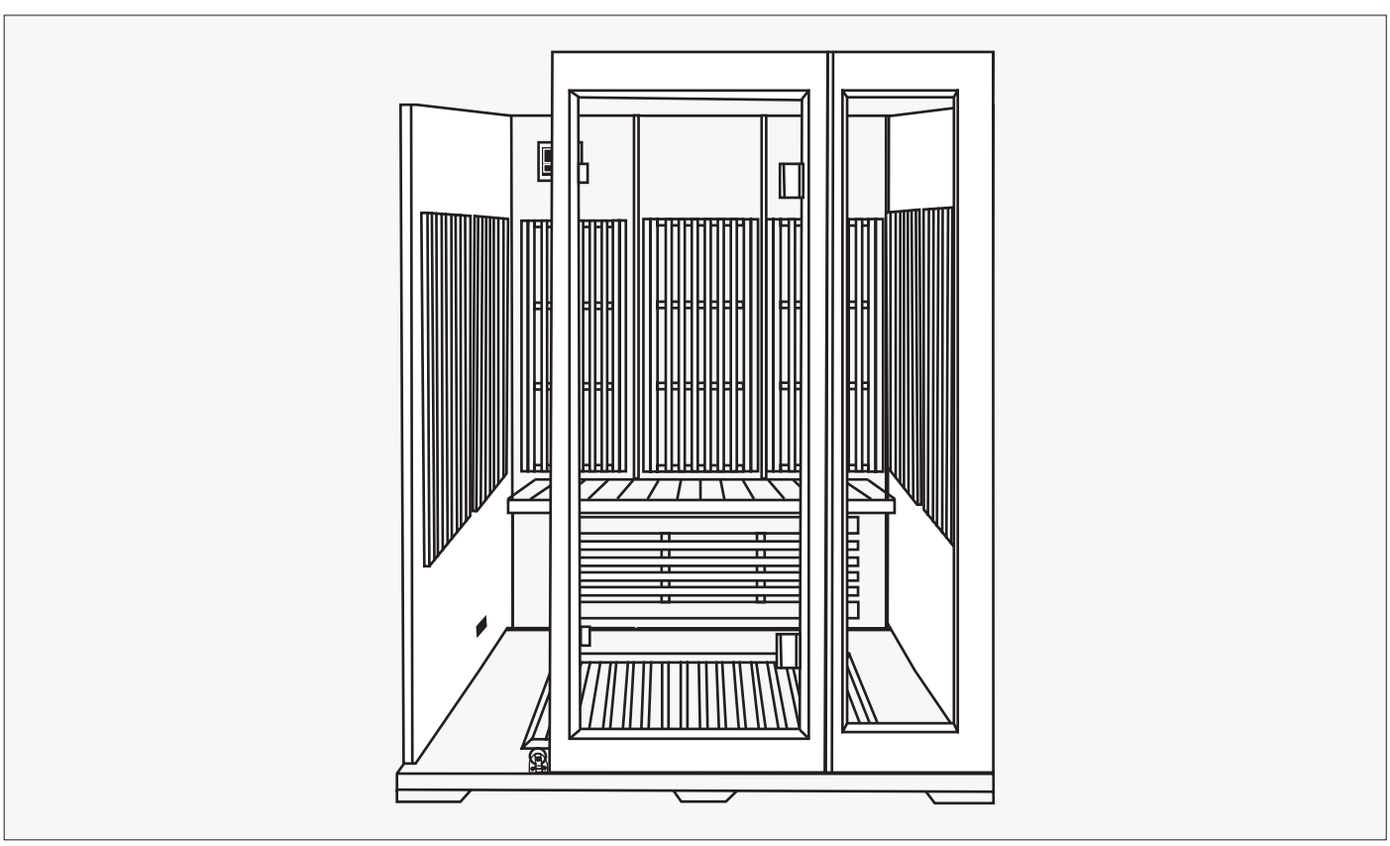

STEP 6.1. ALIGN THE FRONT GLASS DOOR

Align vertically and ensure it sits flush with the right panel.

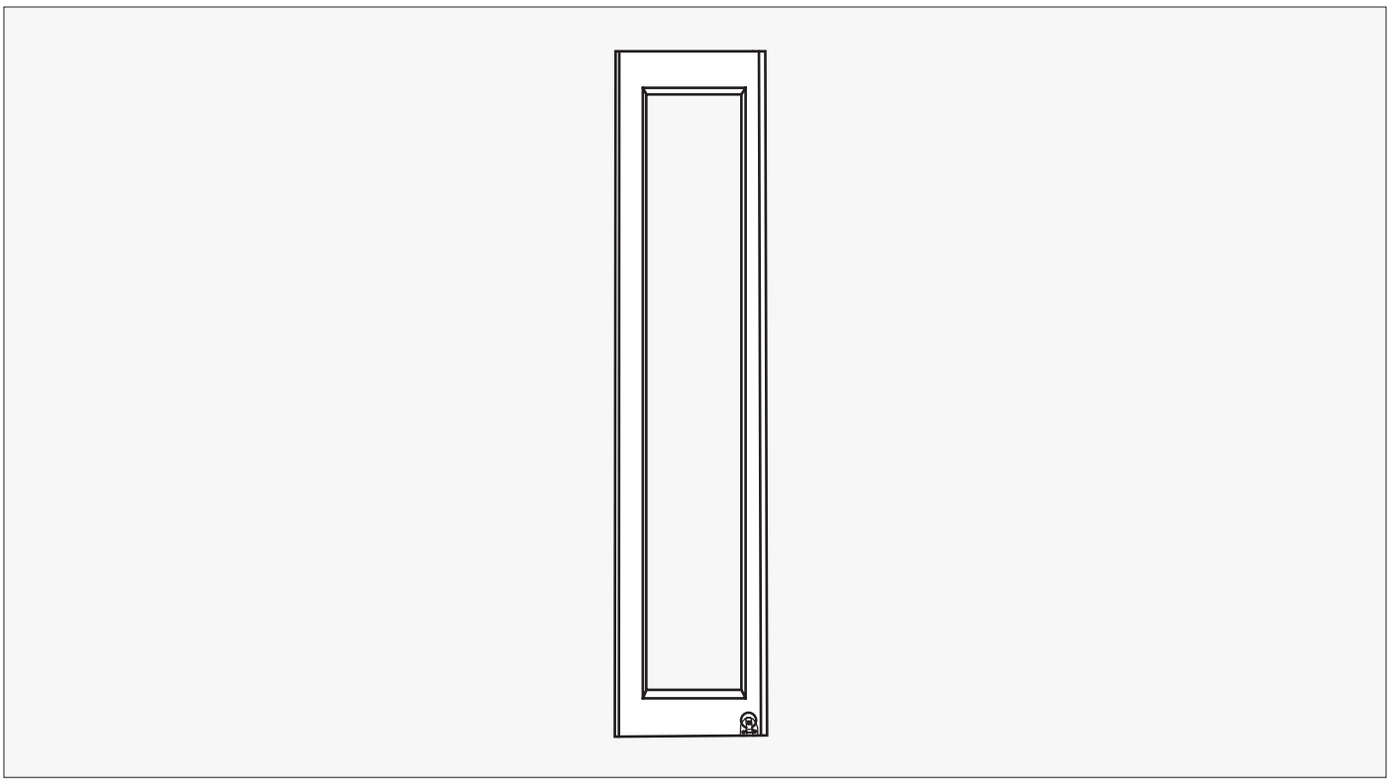

STEP 6.2. TAKE OUT THE LEFT PART OF THE GLASS DOOR

Identify the left part of the glass door and prepare to install.

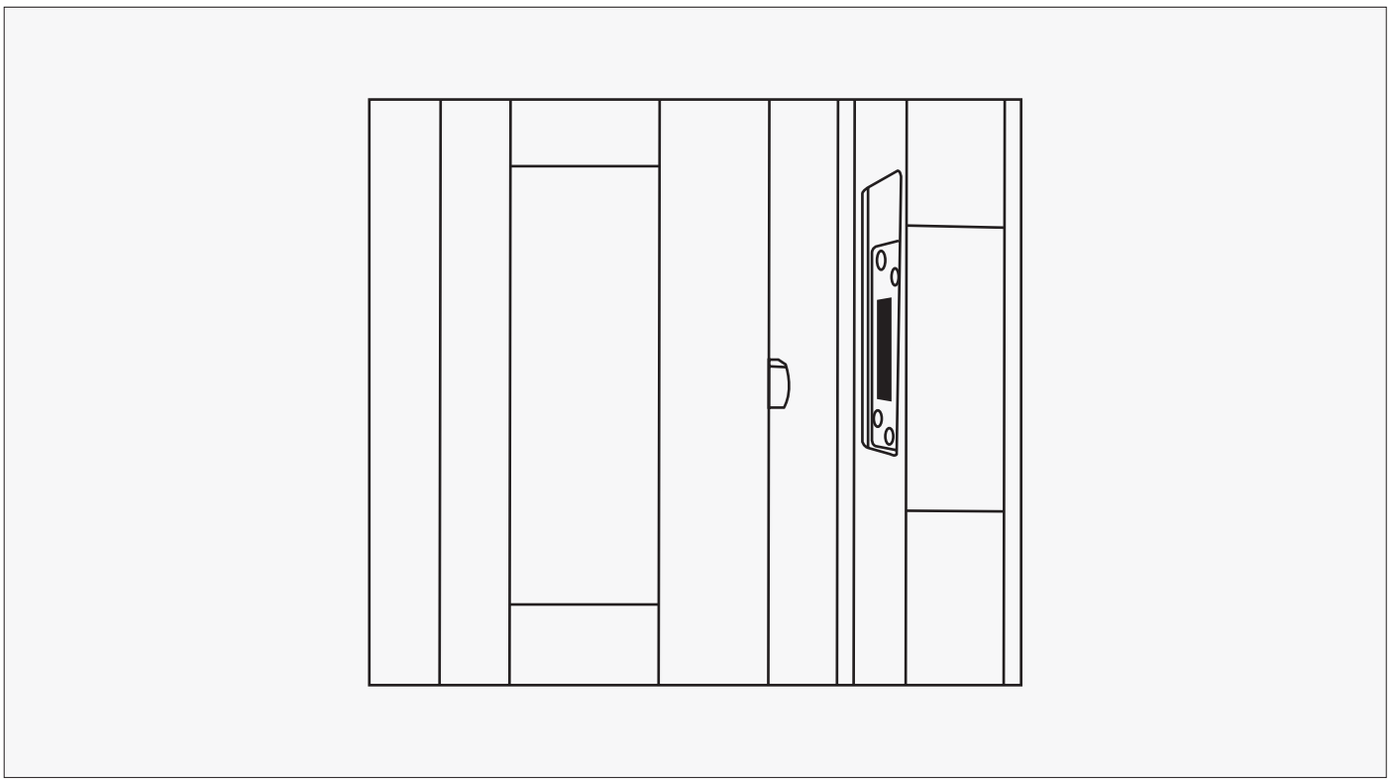

STEP 6.3. INSERT & ASSEMBLE TOGETHER

Align the left part of the glass door with the bottom panel. Make sure the left part of the glass door inserts securely into the right half of the glass door.

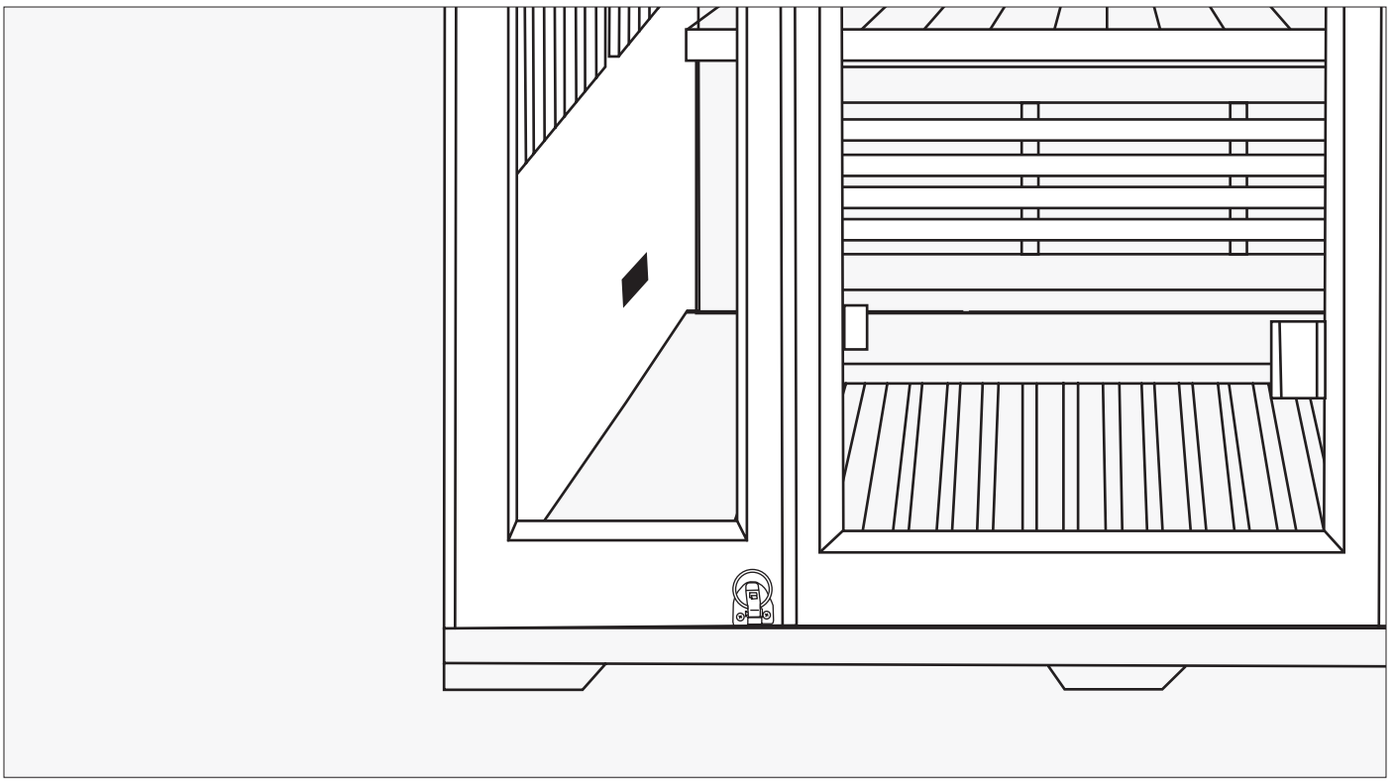

STEP 6.4. SECURE REMAINING LATCHES

Identify the remaining latches and securely close them.

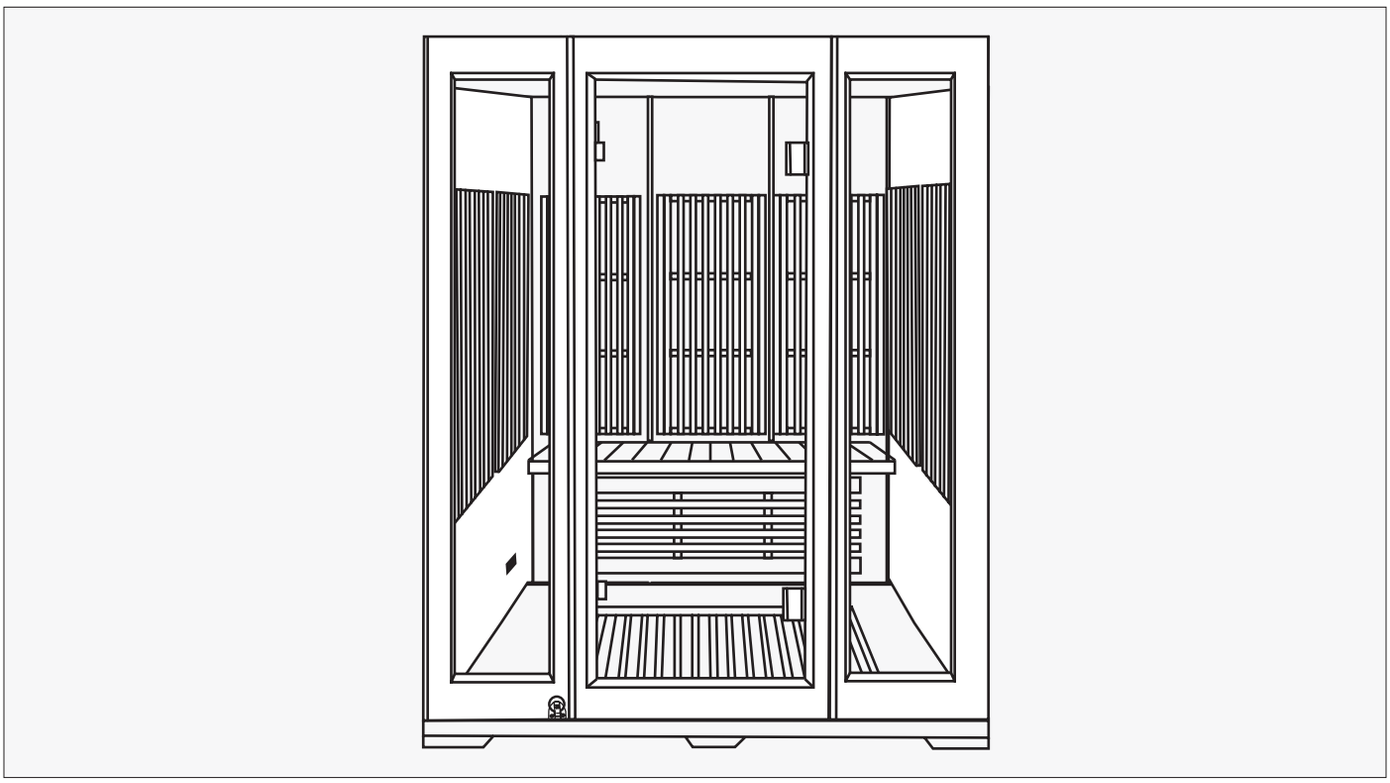

STEP 6.5. FINISH THE PROCESS OF THE GLASS DOOR

The main structural component of the sauna is complete, check to see that all sections are properly aligned and all latches are secure.

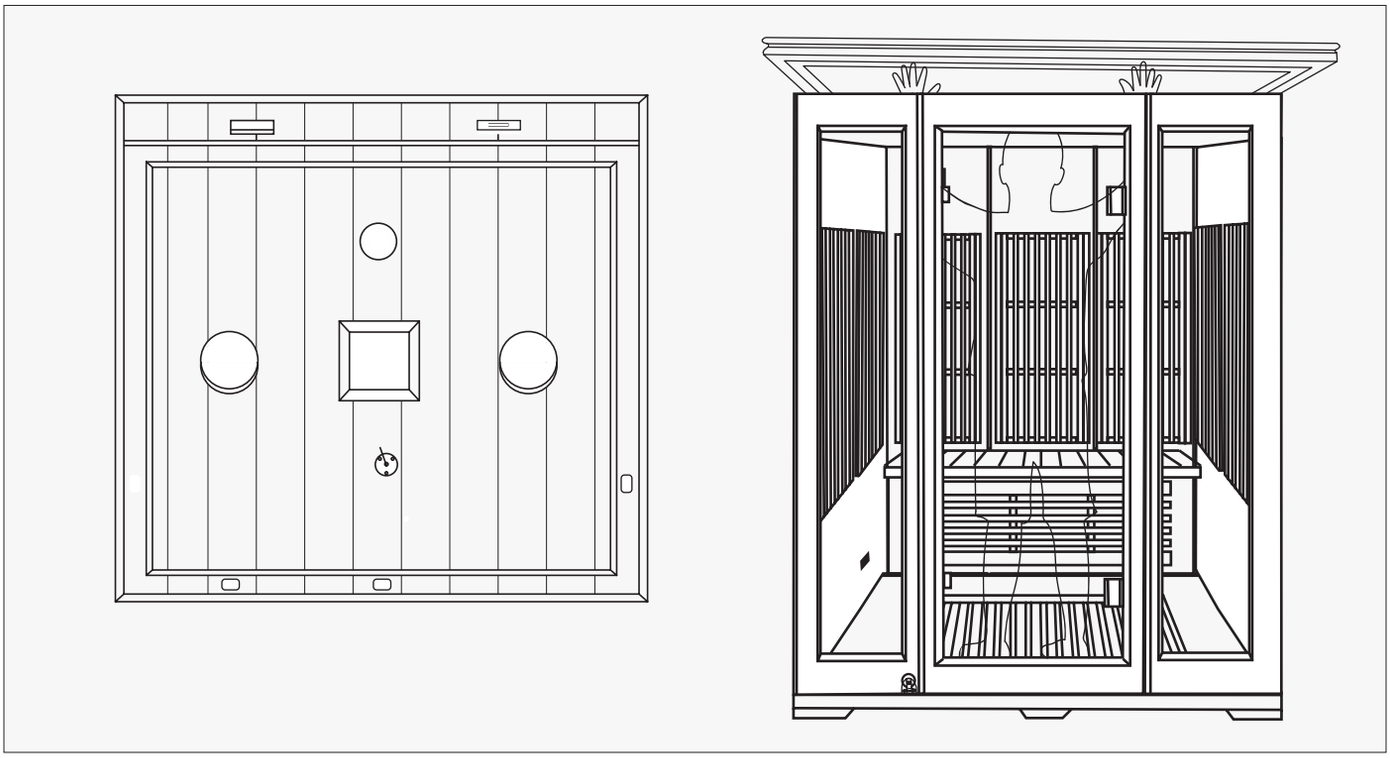

STEP 7. TOP PANEL ASSEMBLY

Position all wires outside to ensure enough space for setting up the top panel (section 9).
Open the door, raise the top panel high enough to check if it aligns with the surrounding panels, then carefully lower it into place.

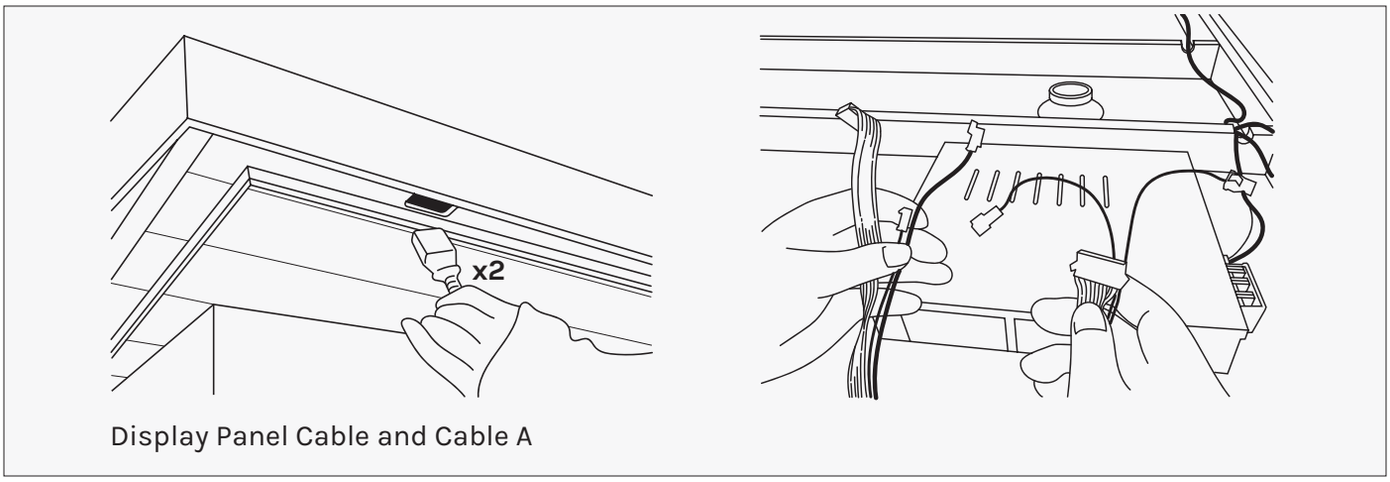

Display Panel Cable and Cable A

STEP 8. WIRE ASSEMBLY

As you lower the internal top panel into place, ensure that all the wires and connecting plugs mentioned above are guided through the corresponding holes in the top panel. These wires will connect to the controller on the internal top panel.

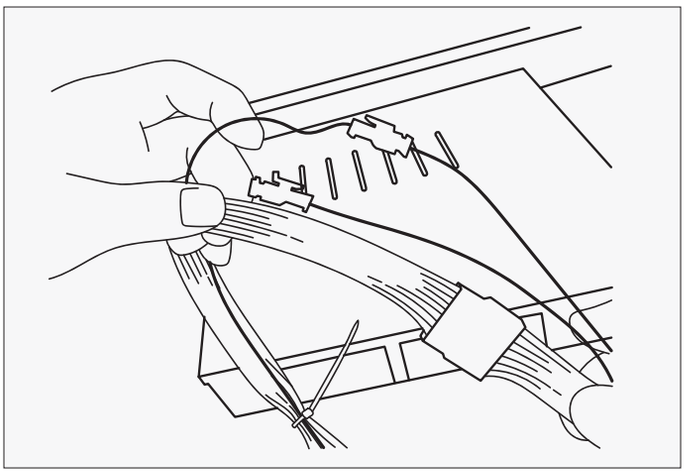

Next, feed the power plugs for the speakers, temperature sensor, and control box through the hole in the top panel.

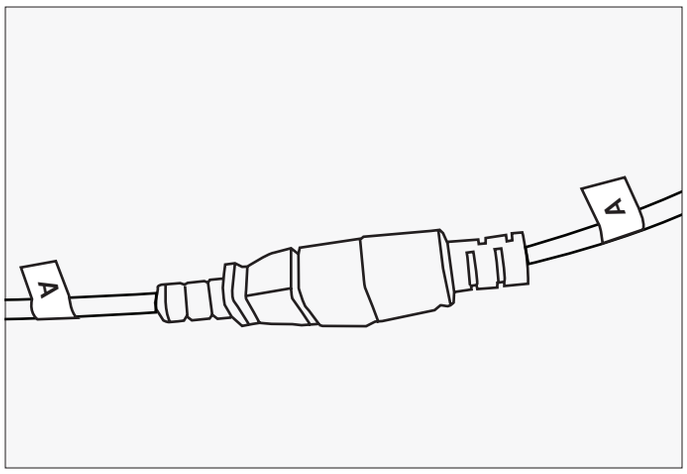

Join the 2x labelled **A** cables together.

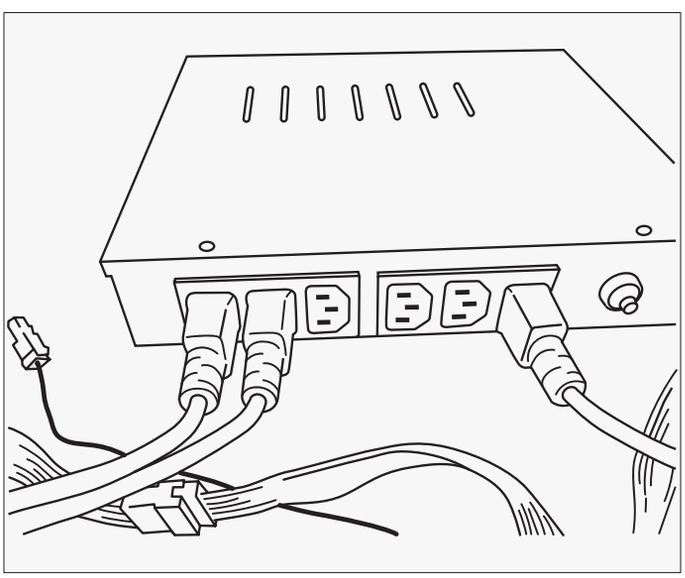

Guide the wires down into the sauna cabin.

Connect all wiring from the top board to the corresponding connectors for the control box, temperature sensor, and radio antenna. Ensure that all connections are made, as missing any connections will prevent the sauna from functioning.

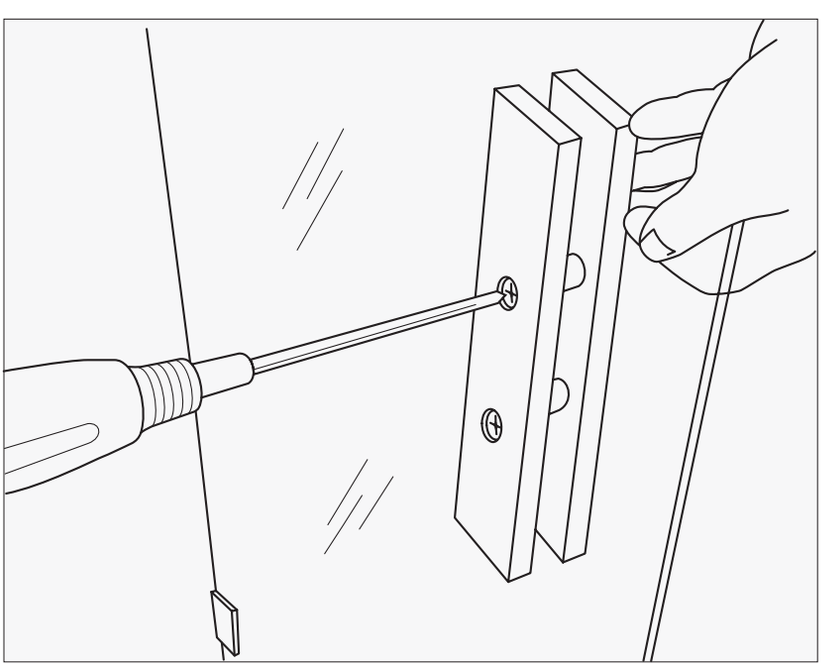

STEP 9. DOOR HANDLE ASSEMBLY

Install the door handle, towel rack, cup holder, and, if configured, the oxygen ionizer.

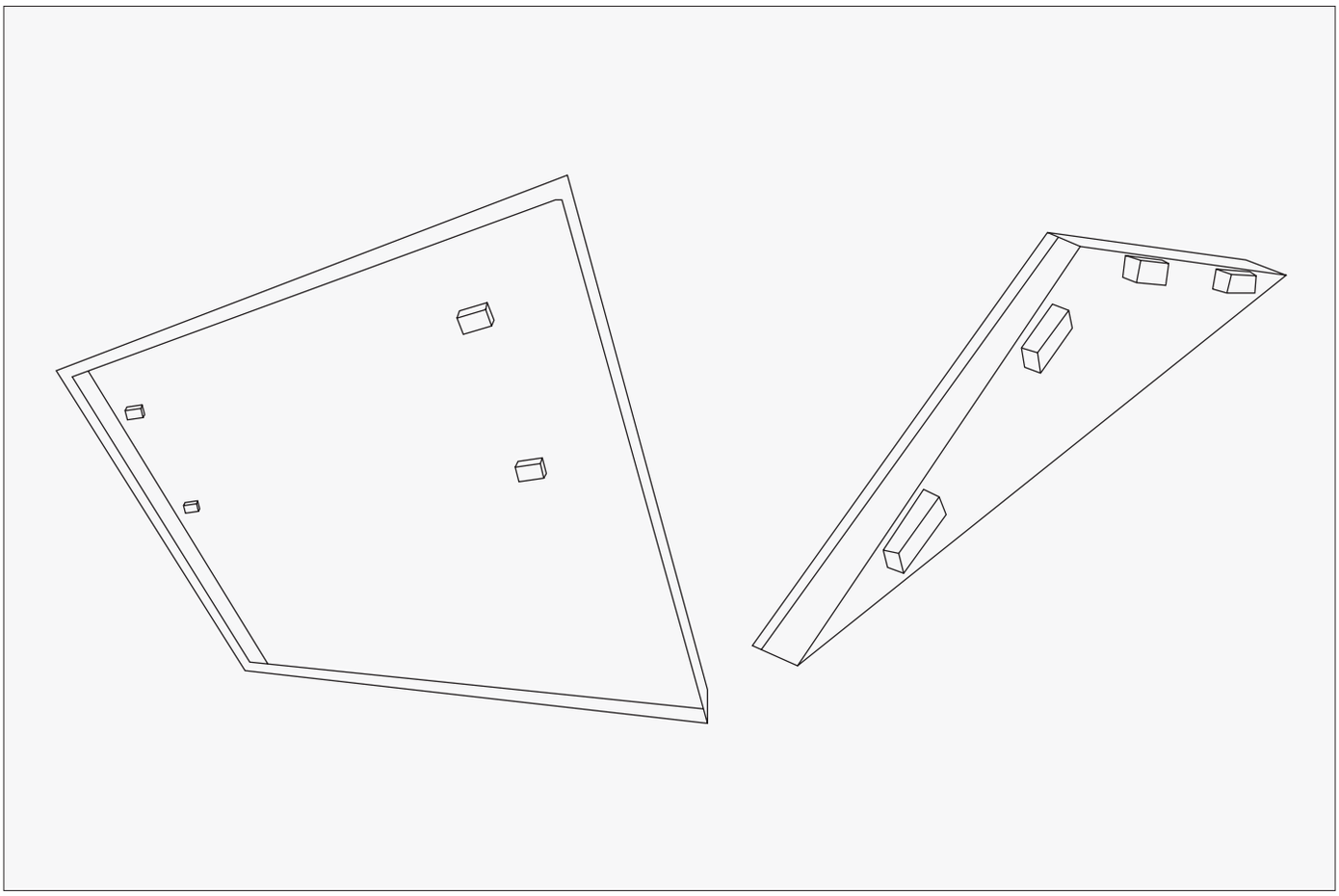

STEP 10. ROOF ASSEMBLY

1. Once all steps are completed correctly, plug in the power and test the sauna to ensure it operates properly. After confirming its functionality install the roof.
2. All parts of roof have protruding blocks that need to be turned inwards when assembled. Before installing the triangular support frame, the wires have to be put through the pre-drilled holes first (same as two sides).

Back Roof

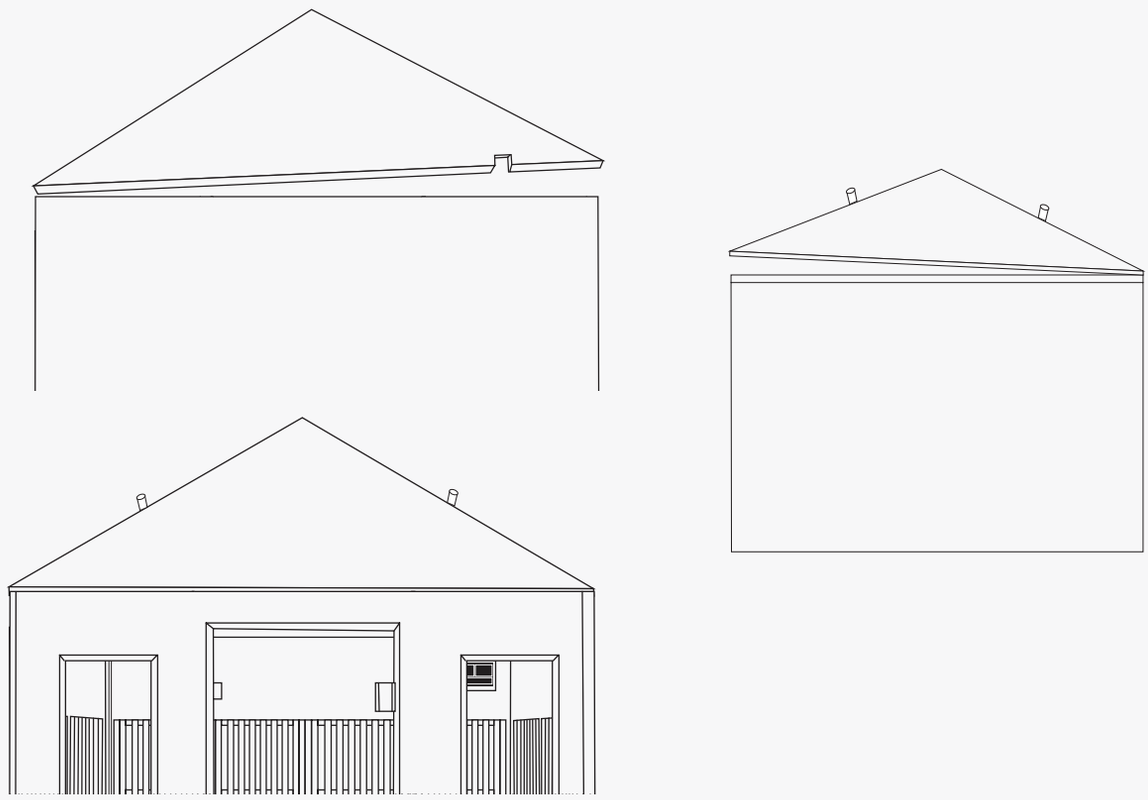

2. Install the triangular support frames on the front and rear sides of the roof and fix them with screws. Each side of the triangle piece requires one screw on the left side and one screw on the right side – a total of 4x screws (4x50mm).

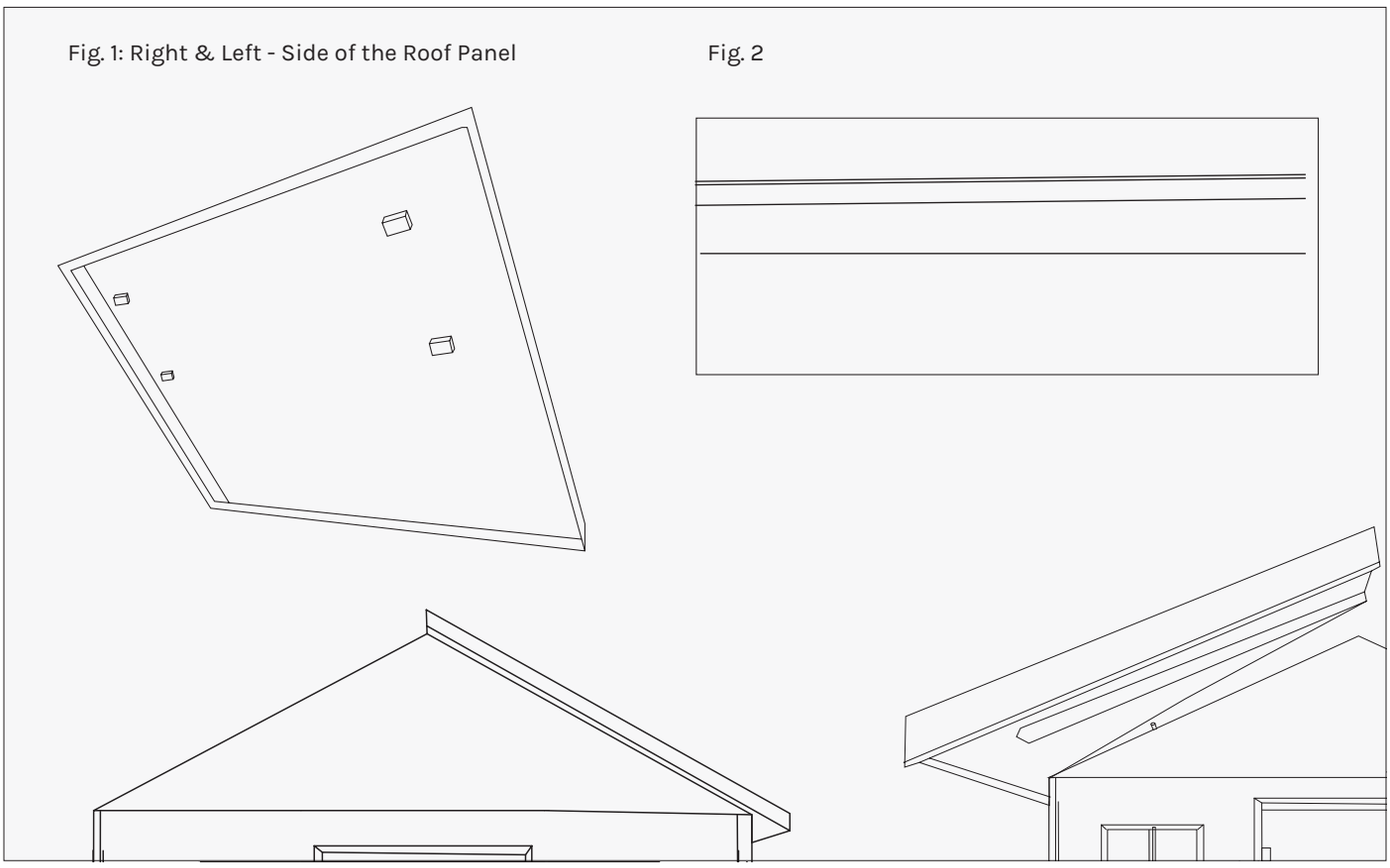

2. Fig. 1: Place the right roof steadily according to the corresponding wooden dowel holes, as shown in Fig. 2. Repeat the same for the left side of the roof.

3. The power cord is routed on the back panel. Plug into wall socket and turn on after assembly is completed.

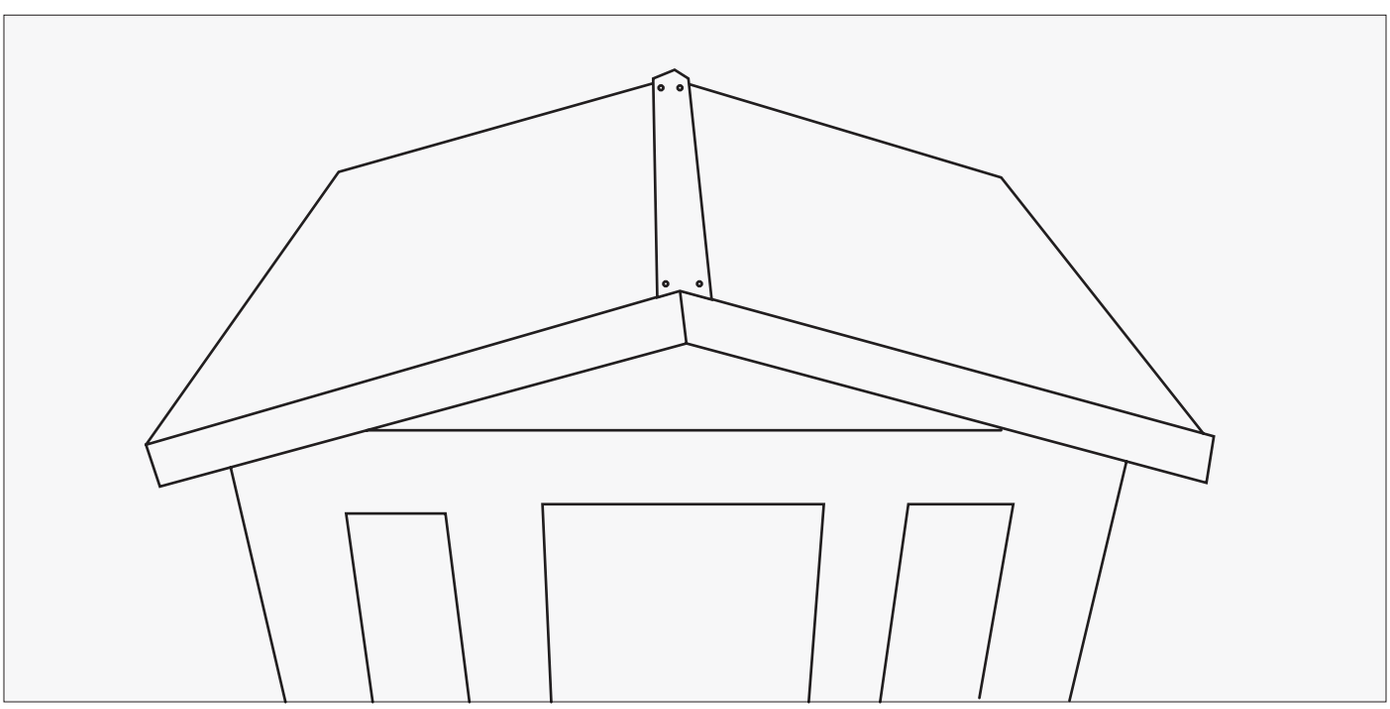

4. Secure the waterproof tiles with four screws. (4*35mm)

1. PRECAUTIONS

a. Ensure all circuitry and plugs comply with safety standards and requirements.

b. Set the temperature and time to a comfortable level before starting the session.

c. Drink a glass of water before beginning your sauna session.

d. After 4 hours of continuous use, allow the sauna to cool down by shutting it off for at least one hour.

e. Avoid burns by not touching the heating element at any time.

2. OPERATION

a. Plug the ReGen8 Sauna into a 240-volt wall outlet only. Do not share the outlet with any other appliances. Use the ON/OFF switch to activate the sauna. When the sauna is not in use, unplug it from the outlet.

b. Press the 'Temperature' button to adjust the heat. If the 'Heat' light is on, pressing the '+' button increases the temperature by one degree. Holding the button for three seconds will increase the temperature rapidly. To decrease the temperature, use the '-' button in the same manner. Once the desired temperature is reached, the 'Heat' light will turn off.

c. Press the 'Light' button to turn the interior light on or off.

d. If the sauna becomes too stuffy, open the ceiling vent or the front door for ventilation.

e. After completing your sauna session, turn off the unit and unplug the power cable.

f. To set the timer, press the 'Function' button until the 'Time' setting blinks. Use the '+' and '-' buttons to set the timer from 5 to 90 minutes. Holding the button for three seconds will increase the time more quickly. When the display reads '05,' the timer will buzz, and the sauna will shut off automatically after 5 minutes. To extend the sauna session, reset the timer.

IV. CONTROL PANEL OPERATION

Controller Brief Description

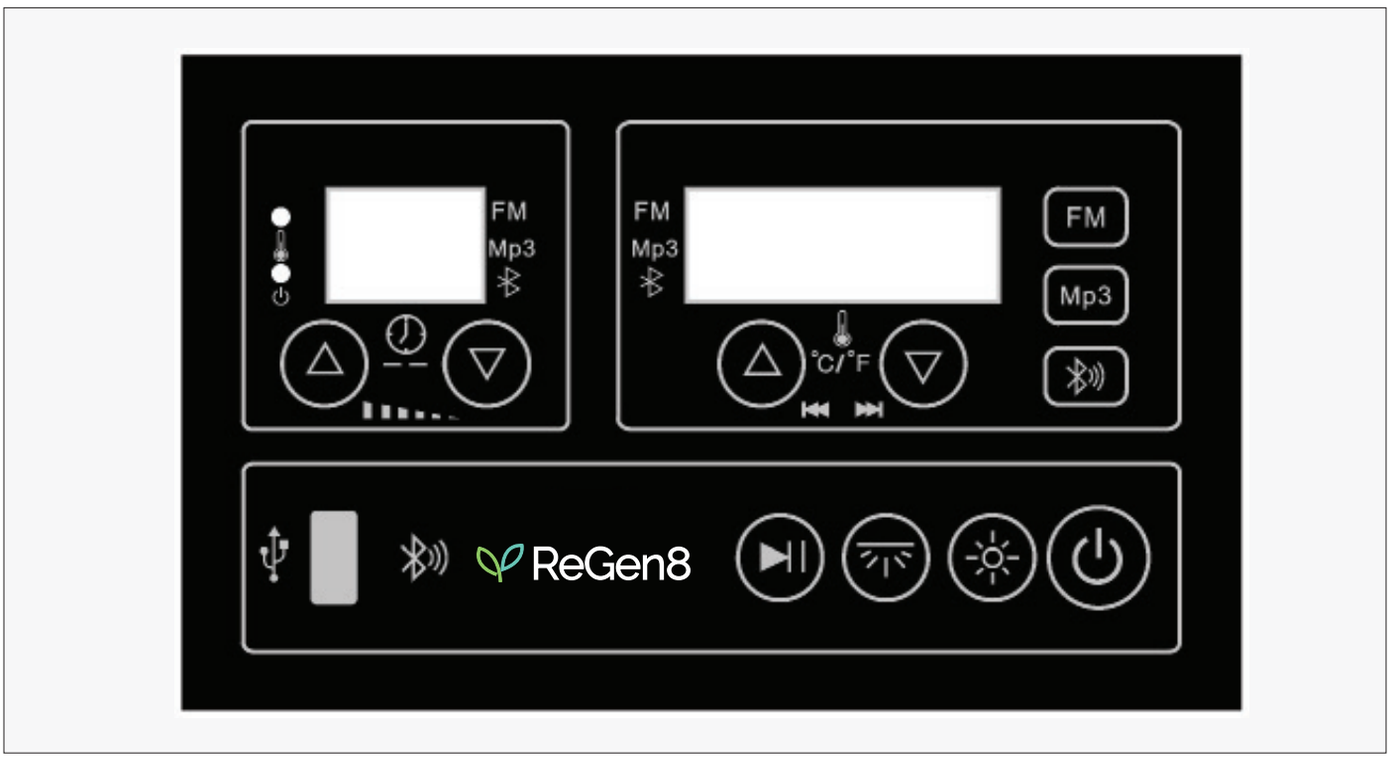

1. ON/OFF Button:

ON: When you plug the unit into the electrical outlet, the power indicator will flash. Press the ON/OFF button to turn the sauna on immediately. The LCD will display the last used settings for both temperature and time.

OFF: During normal operation, press the ON/OFF button again to turn off the sauna. The unit will shut down, and only the power indicator will continue to flash.

2. Temperature Setting:

When not using MP3/FM/BT display, press the temperature [up] or [down] button to adjust the temperature setting. Holding the [up] or [down] button will allow the temperature to increase or decrease continuously. After adjusting the temperature, the system will automatically exit the setting mode after about 5 seconds and return to displaying the current actual temperature.

3. Time Setting:

When not using MP3/FM/BT display, press the time [up] or [down] button to adjust the time. Holding the [up] or [down] button will allow the time to increase or decrease continuously. After adjusting the time, the system will automatically exit the setting mode after about 5 seconds and return to displaying the actual temperature. When the time is set to "00," the heaters will stop, and a reminder sound will beep 5 times.

4. Fahrenheit/Celsius Settings:

When adjusting the temperature, press both the [up] and [down] buttons simultaneously to toggle between Fahrenheit and Celsius.

5. Reading Light Control:

In normal operation, press the light button once to turn the reading light on. Press it again to turn the light off. The reading light can also be controlled when the sauna is turned off.

6. Color Light Control:

When the sauna is powered on, the color light will automatically illuminate. Press the color light button once to display a white light. Press the button repeatedly to cycle through the following colors: red, green, blue, yellow, purple, automatic color-changing mode, and back to off.

7. FM Radio:

- Press the FM button once to enter FM radio mode. The screen will display the "F-" symbol along with the FM channel.
- Use the right-side "temperature +, -" buttons to change the channel, and the left-side "time +, -" buttons to adjust the volume.
- Press the play/pause button to pause or resume the radio.
- The channel selection range is 76.0-108.0 MHz. When searching for stations, the temperature and time display windows will show the frequency being searched (e.g., 103.3). After about 5 seconds, the display will automatically return to showing the temperature and time.

8. MP3 Player:

- Press the Mp3 button twice to enter MP3 player mode. The screen will display the "P-" symbol, and the first song will begin playing.
- Use the right-side "temperature +, -" buttons to select the previous or next song, and the left-side "time +, -" buttons to adjust the volume.
- Press the play/pause button to pause or resume the MP3.
- When selecting songs using the "temperature +, -" buttons, the temperature display window will show the track number, and the time display window will show the current track details. After about 5 seconds, the display will automatically return to showing the temperature and time.

9. Bluetooth:

- Press the button three times to enter Bluetooth mode. The screen will display "B-". After hearing a sound, search for the Bluetooth name on your mobile device to connect.

- Once connected, you can play music from your mobile phone. Use the play/pause button to control playback.

- To adjust the volume, use the left-side "Time +, -" buttons.

- After 5 seconds, the display will automatically return to showing the temperature and time.

- The effective Bluetooth range is 10 meters. If playback fails after connection, disconnect Bluetooth on your mobile phone, unplug and re-plug the sauna, then reconnect via Bluetooth.

10. Switching Between FM/MP3/Bluetooth:

This button allows you to switch between FM radio, MP3, and Bluetooth modes.

11. Heater Control:

- This button turns all heaters on or off. After pressing the ON/OFF button to activate the sauna, press this button to start the heaters.

- If the display shows "--", it means the heaters are not working.

Safety Precautions

a. To avoid the risk of fire, do not dry clothes or leave towels inside the sauna.

b. To prevent burns or electric shocks, avoid touching or using metal tools on the net cover of the Carbon heater elements.

c. While inside the sauna, do not touch the light bulb. If the bulb needs replacement, turn off the sauna and wait until the unit and bulb are completely cool before proceeding.

d. Do not spray water on the Carbon heater tubes, as this could cause electric shock or damage the heater elements.

e. Do not use the Sauna if you have any of the following conditions:
- Open wounds
- Eye diseases
- Severe sunburns
- Elderly and weak individuals, especially those suffering from illness, pregnant women, and infants should not use the sauna. Children over the age of 6 may use the sauna under adult supervision.
- If you have a medical condition sensitive to temperature changes, consult your doctor before using the sauna.
- Do not place pets inside the sauna.
- Do not use the sauna while under the influence of alcohol.

V. TROUBLESHOOTING

Number	Problems	Possible reasons	Countermeasure
1	Power indicator light not working	The socket is not functioning properly	Check the power supply and socket to see if replacement is necessary
		The fuse is burned out	Replace the fuse
2	Function indicator light not working	The indicator light is faulty	Repair or replace the control panel
		A circuit or accessory related to the function is broken	Repair or replace the circuit or accessories related to the malfunctioning function
3	Carbon heater is not producing heat or carbon rays	The heater is broken	Replace the heater with a new one of the same specifications
		The heater's lifespan has decreased from frequent use	
		The fuse is burned out	Replace the fuse with one of the same specifications
		Incorrect circuit connection for the heater	Check and reconnect the circuit tightly
		The circuit or accessories related to the control panel are broken	Repair or replace if necessary
4	Abnormal temperature inside the sauna room	Heater malfunctions	Replace the heater with a new one of the same specifications
		Incorrect operation settings	Reset the settings
		Faulty circuit or temperature control accessories	Repair or replace the control panel
5	Unusual smell or noise inside the sauna	Circuit problems (e.g., broken accessories, short circuit, or control system failure)	1. Cut off the power and check the power supply and voltage 2. Identify the faulty components 3. Fix the issue
6	Light not working	Bulb filament is burned out	Replace the bulb
		Bulb or lamp fixture is loose	Replace the bulb and raise the reed in the lamp fixture, tighten the bulb, and reconnect it properly
		Socket is broken	Replace the socket
		Electrical control panel issue	Repair or replace the control panel
7	No sound from the speakers	Speaker is broken	Replace the speaker with a new one of the same specifications
		Loose electrical connection	Reconnect and secure the electrical connection

VI. MAINTENANCE

INTERIOR WOOD

- Wipe down benches, backrests, and walls with a clean, dry cloth after each use.
- Do not pour water directly onto the internal wood. If cleaning is required, use a lightly dampened cloth with warm water (avoid harsh cleaners).
- Allow the sauna to air out after each session by keeping the door open until fully dry.
- Periodically sand rough spots or sweat stains with fine-grit sandpaper to maintain a smooth, hygienic surface.

EXTERIOR WOOD

- The first application of professional outdoor wood wax oil should be done after two years, followed by annual applications. Adjust frequency based on weather exposure and paint/finish usage.
- It is not advisable to purchase non-specialized custom or coloured paints, as incompatible chemicals or paints may react with the wood wax oil coating and damage the timber.
- Regularly clean off dirt, dust, and pollen with a soft brush or cloth.
- Remove leaves, debris, or standing water from the roof and around the base to prevent moisture damage.
- Inspect for signs of mould or mildew and clean with a mild soapy solution if necessary.

GLASS SURFACES

- Clean glass doors or windows with a non-abrasive glass cleaner or diluted vinegar solution.
- Avoid using harsh chemicals that may affect seals or finishes.

GENERAL CLEANING

- Clean the sauna room with a damp cotton towel, then dry it with a clean, dry towel.
- Do not use benzene, alcohol, or strong cleaning chemicals, as these may damage the wood and its protective layer.

GENERAL CHECKS

- Inspect door hinges, handles, and seals regularly; tighten screws and adjust if needed.
- Ensure ventilation points are free of blockages for proper air circulation.

IMPORTANT NOTE:

Do not leave the sauna or the music player on for more than 2 hours at a time.

TRANSPORTATION & STORAGE

1. Avoid exposing the sauna to rain, snow, or any strong impacts during transport.
2. Store the sauna in a dry environment; do not store it in damp or humid areas.

PACKING LIST

1 x Carbon sauna room with waterproof tiles (2 x triangle support, 2 x side panels included)
9 x Carbon Heaters (2660W)
2 x Cup shelves
1 x Light bulb
1 x Light housing
1 x Music player and 2X Speakers
1 x Interior control panel cover
1 x Backrest
1 x Bag of screws and bolts
1 x door Hand & screwdriver
1 x Instruction manual
1 x Oxygen Ionizer

VII. WARRANTY

AUSTRALIAN CONSUMER LAW

Many of our products come with a guarantee or warranty from the manufacturer. In addition, they come with guarantees that cannot be excluded under the Australian Consumer Law. You are entitled to a replacement or refund for a major failure and compensation for any other reasonably foreseeable loss or damage.

You are entitled to have the goods repaired or replaced if the goods fail to be of acceptable quality and the failure does not amount to a major failure. Full details of your consumer rights may be found at **www.consumerlaw.gov.au**.

Please visit our website to view our full warranty terms and conditions:
http://www.lifespanfitness.com.au/warranty-repairs

WARRANTY AND SUPPORT

Any claim against this warranty must be made through your original place of purchase.
Proof of purchase is required before a warranty claim may be processed.

If you have purchased this product from the Official Lifespan Fitness website, please visit
https://lifespanfitness.com.au/warranty-form

For support outside of warranty, if you wish to purchase replacement parts or request a repair or service, please visit h**ttps://lifespanfitness.com.au/warranty-form** and fill in our Repair/Service Request Form or Parts Purchase Form.

Scan this QR code with your device to go to **lifespanfitness.com.au/warranty-form**

LIFESPAN FITNESS

WWW.LIFESPANFITNESS.COM.AU