ReGen8

Quadro Corner - 4 Person (Natural or White)

USER MANUAL

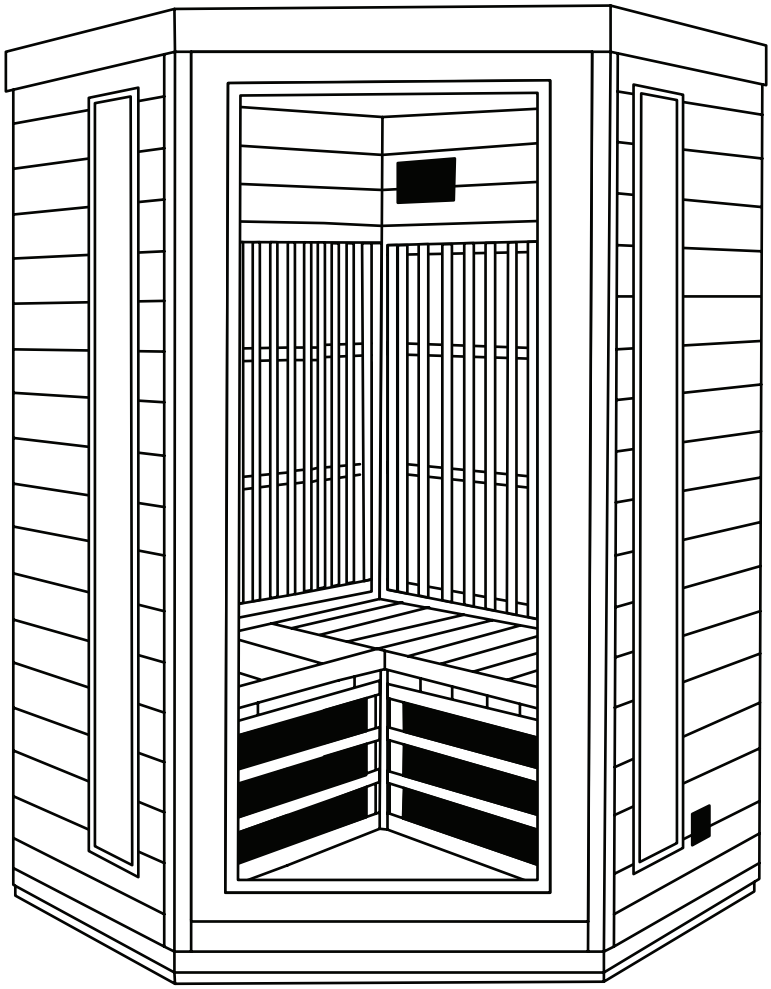

Find the Digital Manual Online

Product may vary slightly from the item pictured due to model upgrades.

Read all instructions carefully before using this product. Retain this owner's manual for future reference.

NOTE:
This manual should not be used to guide your purchasing decision. Your product, and the contents inside its carton, may vary from what is listed in this manual. This manual may also be subject to updates or changes. Updated manuals are available through our website at www.lifespanfitness.com.au

TABLE OF CONTENTS

I. Important Safety Instructions 03

II. Installation Procedure 04

III. Assembly Instructions 05

IV. Circuit Diagram of the Electrical Box 12

V. Control Panel Operation 13

VI. Sauna Operation Guide 16

VII. Troubleshooting 18

VIII. Maintenance 19

IX. Warranty 20

X. Security Support Information 21

I. IMPORTANT SAFETY INSTRUCTIONS

Warning for Australian Commercial Clients (Gyms/Spas): It is mandatory that after 4 hours of continuous operation, the sauna room shall be powered off for a cooling period of 1 to 2 hours prior to restarting. A minimum 2-hour shutdown is strongly advised.

For your safety, it is crucial to adhere strictly to the following precautions while using this product:

IMPORTANT: Sauna uses 240V, 11A wall outlet.

1. Ensure that children use the equipment under the supervision of an adult. Avoid playing with the equipment for safety reasons.

2. Do not insert objects such as fingers or sticks into the heating plate to prevent potential dangers.

3. Never pour water onto the equipment or the heating pipe (board).

4. Avoid using or storing flammable gases or liquids, such as hair spray, oil paint, gasoline, etc., in proximity to the equipment to prevent fire hazards.

5. Refrain from placing items inside or on top of the sauna.

6. Avoid touching the power control panel and any electrical components with wet hands to prevent the risk of electric shock.

7. It is strictly prohibited to use the equipment during thunderstorms to prevent electric shock.

8. Do not tilt the equipment and refrain from using sharp objects to strike it.

9. Shut down the equipment for an hour after continuous operation for 2 hours.

10. Avoid operating the equipment in a prolonged high-temperature environment.

11. Exercise caution when using the equipment after consuming alcohol.

12. Individuals with hemophilia or a tendency to bleed should avoid using the equipment.

13. Consult your doctor before using if you are currently experiencing illness or taking medication.

14. Do not use the equipment immediately after intense exercise; wait until your body temperature returns to normal.

15. If you experience any discomfort, cease using the equipment immediately.

16. Mind your head when entering and exiting the equipment.

17. Do not sleep inside the equipment while it is in operation.

18. Refrain from using any bath products in the sauna.

19. Avoid touching the heating element to prevent burns.

20. Keep the seat timber dry to prevent damage.

21. Ensure the floor heater remains dry to prevent excessive sweat dripping.

WARNING: Covering the heater or infrared emitter poses a fire risk!
If you have any questions, please contact the supplier.

II. INSTALLATION PROCEDURE

a. Do not plug any other appliances into the outlet.

b. Install the sauna on a completely level floor.

c. Do not spray the exterior with water. If the floor is damp, install a floor separator to keep the sauna high and dry.

d. Do not store flammable objects or chemical substances near the sauna.

1. Structure of Carbon Fibre FAR Infrared Sauna

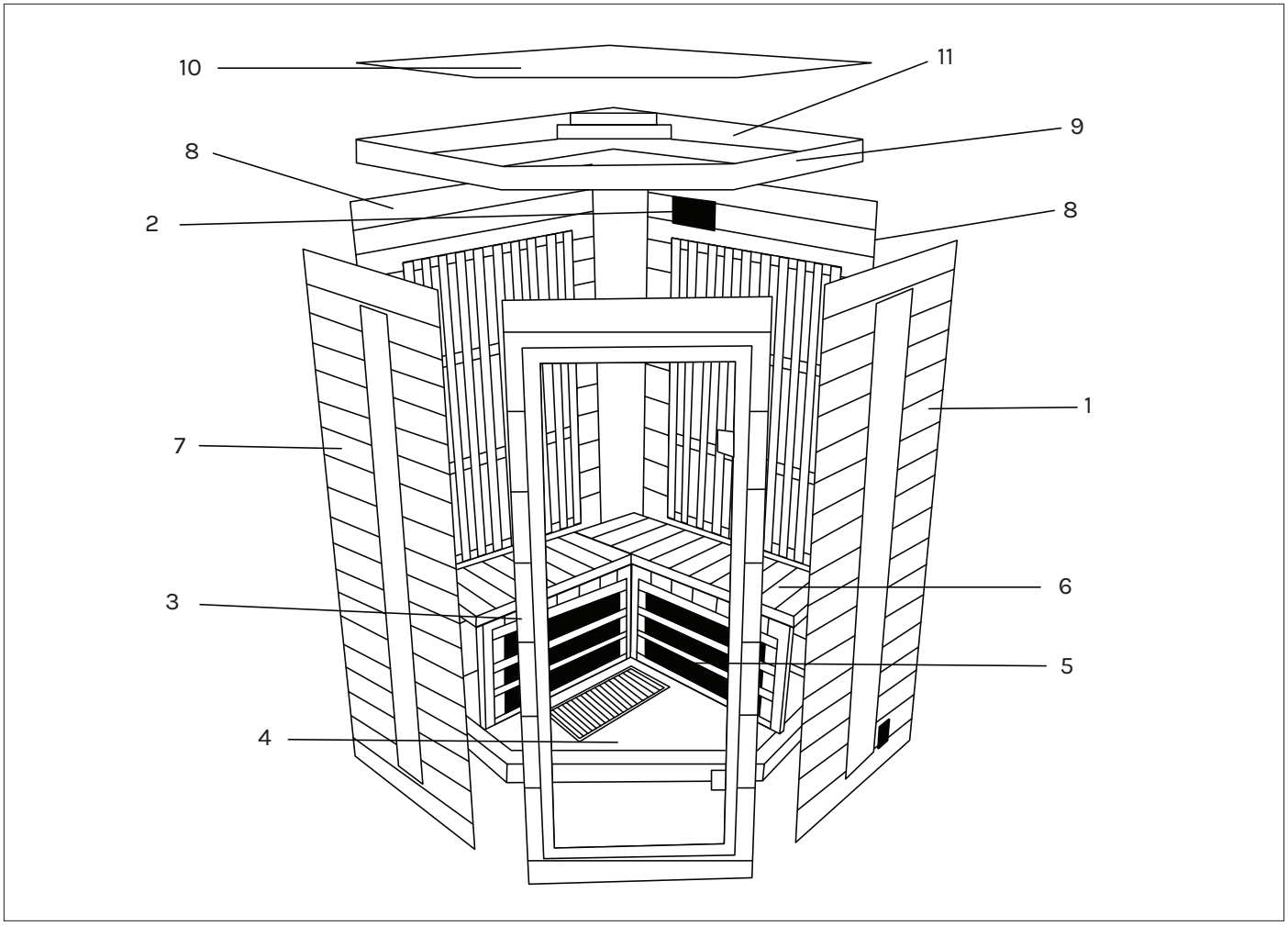

1. Right Side Panel
2. Digital Display
3. Front Panel
4. Bottom Panel
5. Bench Support
6. Bench
7. Left Side Panel
8. Back Panel
9. Internal Top Panel
10. External Top Panel
11. Electric Control Box

Make sure all parts are present before installing the unit. See packing list below.

A. User Manual
B. Bottom Panel
C. Back Panel (2pcs.)
D. Left side Panel
E. Right side Panel
F. Bench Support
G. Bench
H. Back Rest
I. Front Panel
J. Internal Top Panel
K. External Top Panel
L. Cup Holder
M. Magazine Bracket
N. Towel Bracket
O. Handle
P. Oxygen Ionizer

III. ASSEMBLY INSTRUCTION

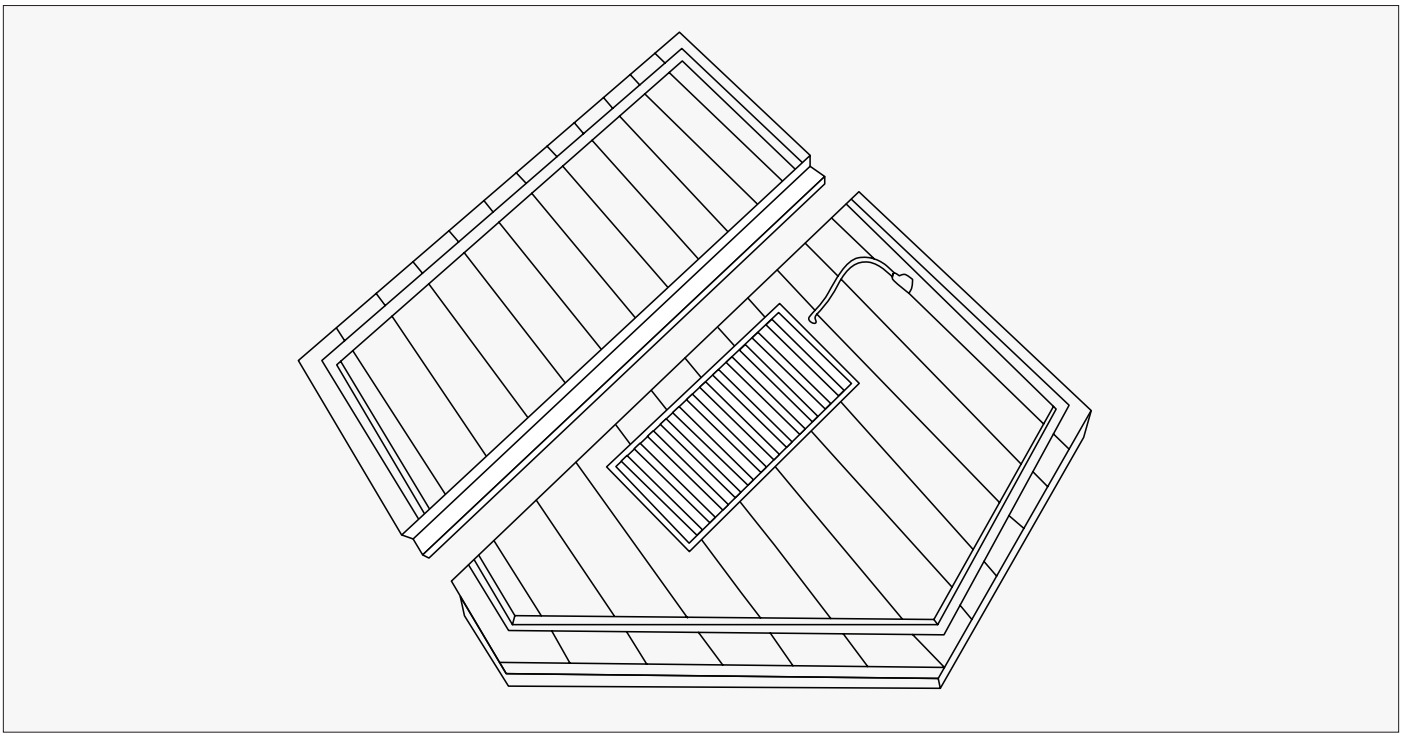

STEP 1. BOTTOM FLOOR ASSEMBLY

Place the bottom panel in the desired location of your sauna and identify the front and back sections. Divide it into two pieces and fix them with six screws, each with a diameter of 4mm and a length of 35mm. The screws are evenly distributed.

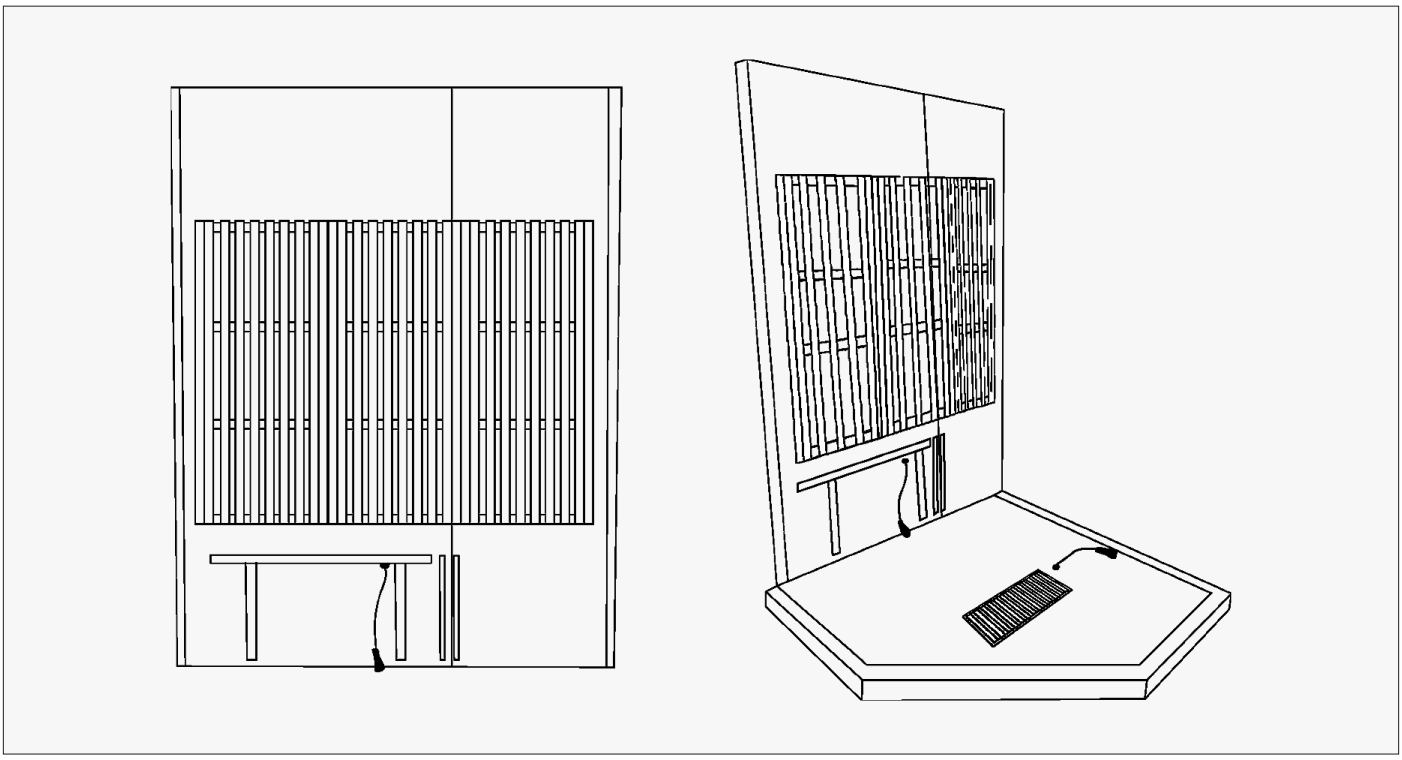

STEP 2. LEFT BACK PANEL ASSEMBLY

Align the left back panel with the bottom board's corresponding battens. Ensure they are in line.

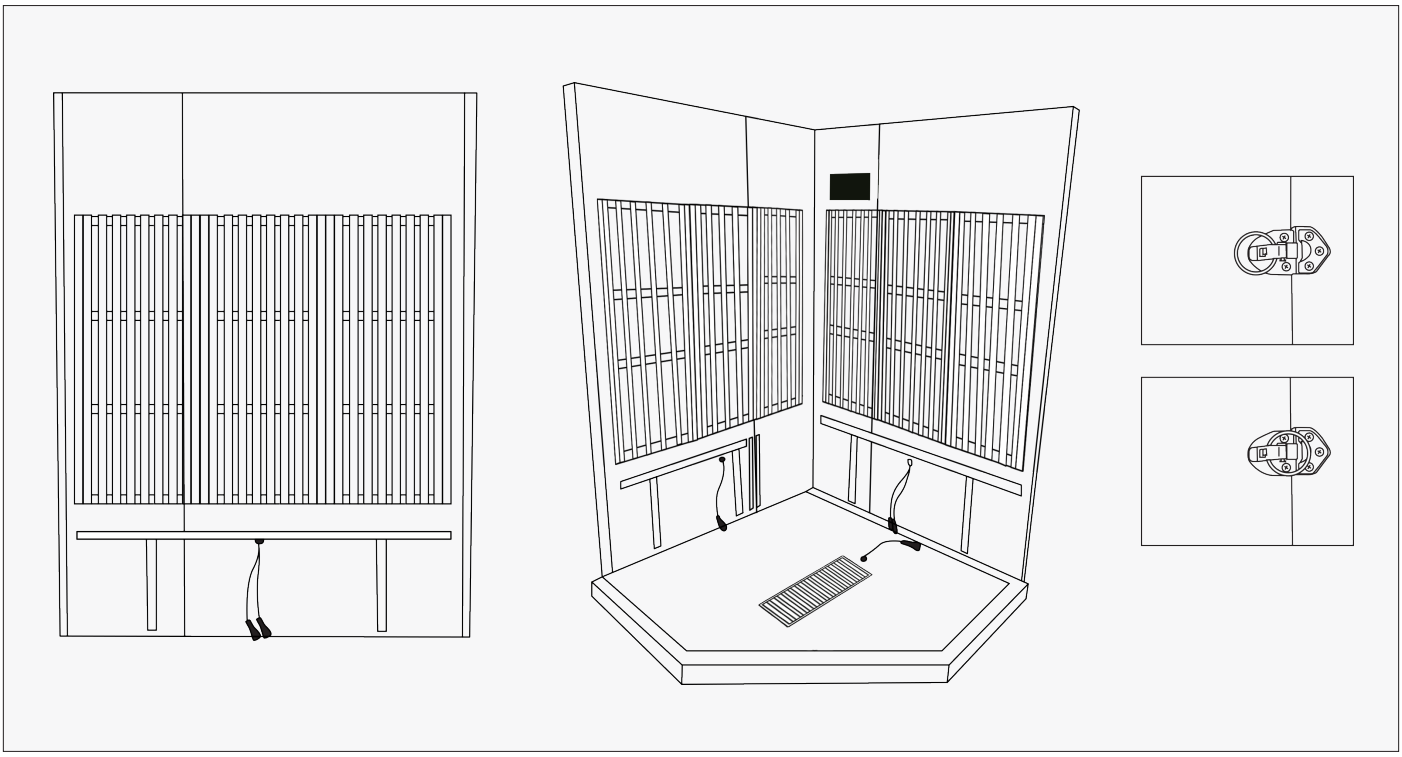

STEP 3. RIGHT BACK PANEL ASSEMBLY

Align the right back panel with the corresponding battens on the bottom panel, ensuring they are properly aligned.

IMPORTANT: The buckle is attached to both back panels. After installing the right and left back panels, lock them securely to ensure they are firmly connected.

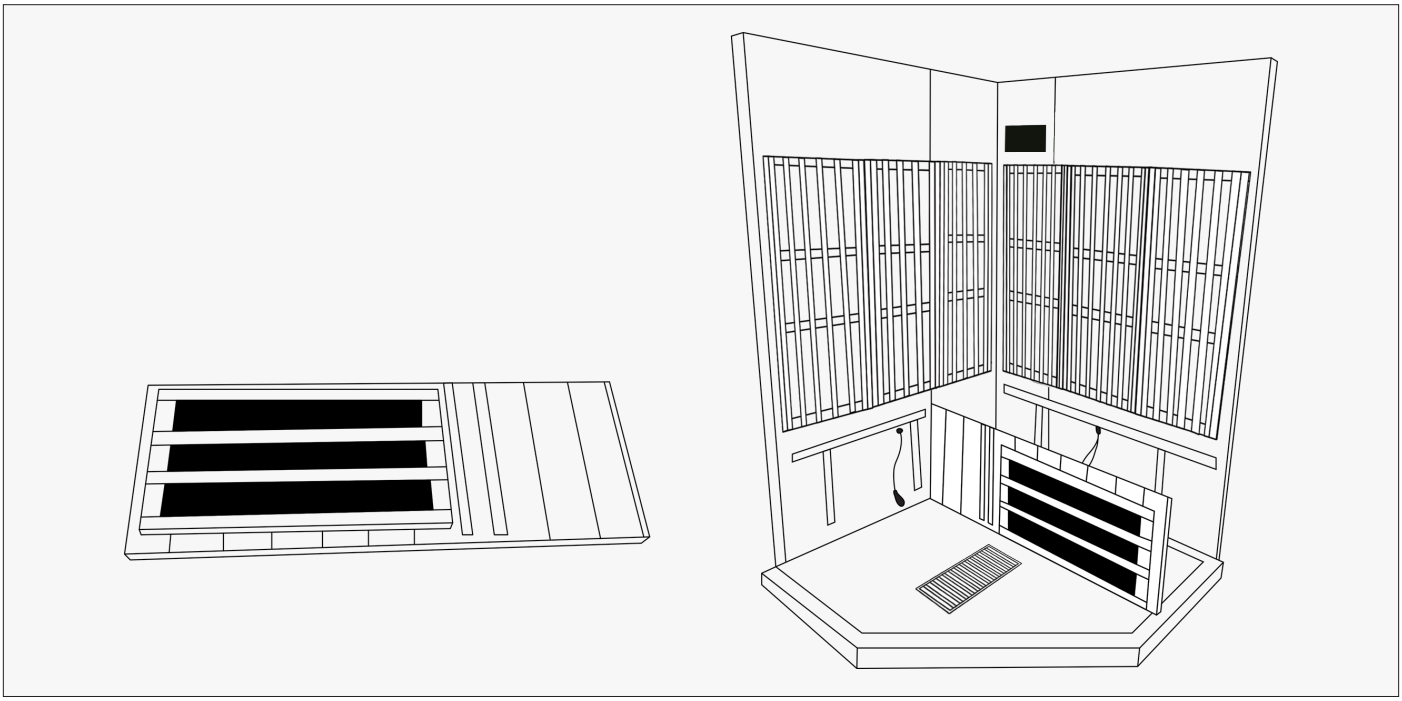

STEP 4. RIGHT BENCH SUPPORT ASSEMBLY

Place the bench support vertically onto the bottom panel, then gently push it flat against the left back panel. Be careful not to scratch the right or side panels.

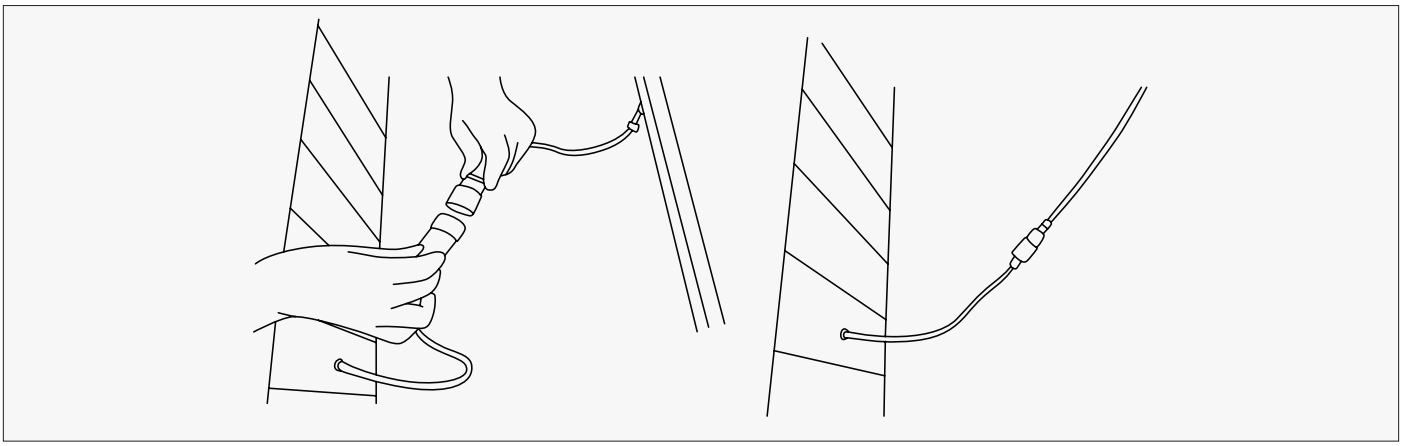

Connect the inner wires to the bench heater securely, ensuring proper alignment and a firm connection.

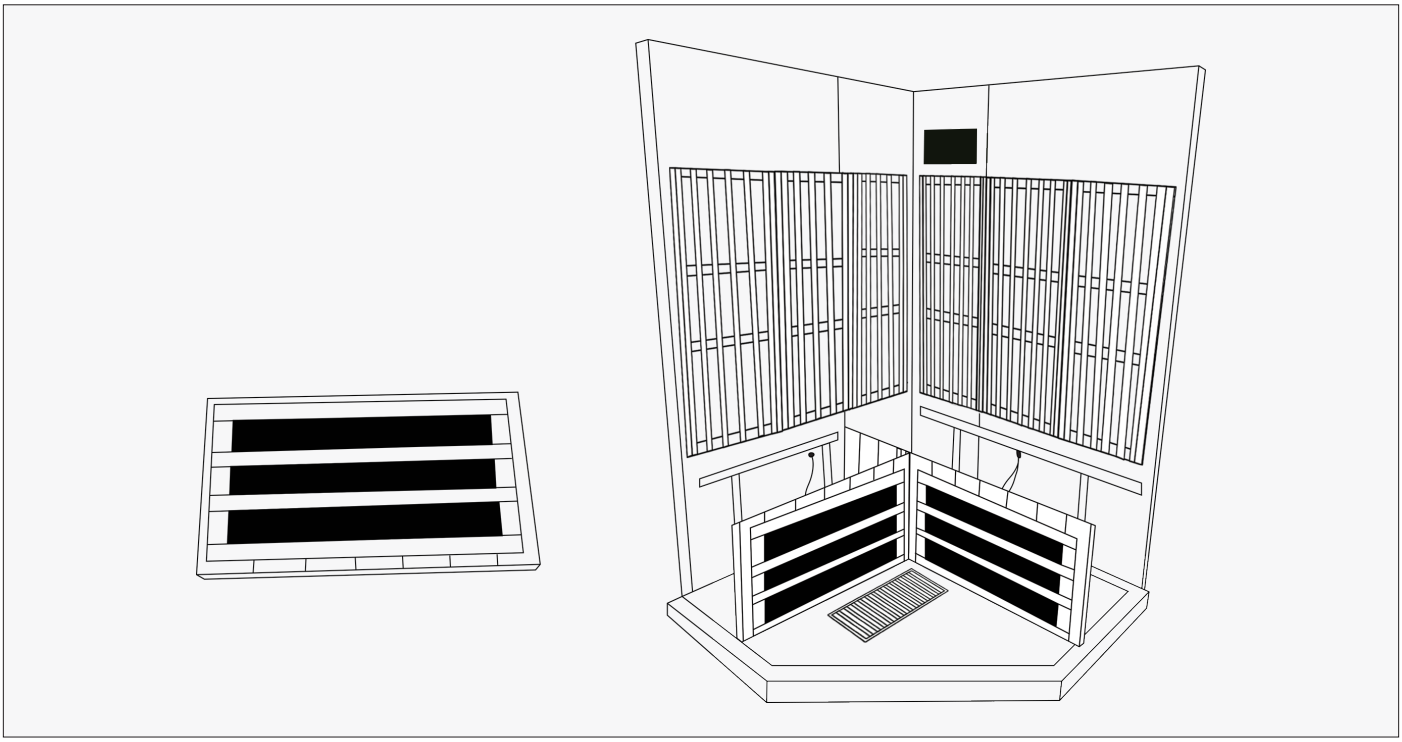

STEP 5. LEFT BENCH SUPPORT ASSEMBLY

Place the left small bench support vertically onto the bottom panel, then gently push it flat against the right support panel.

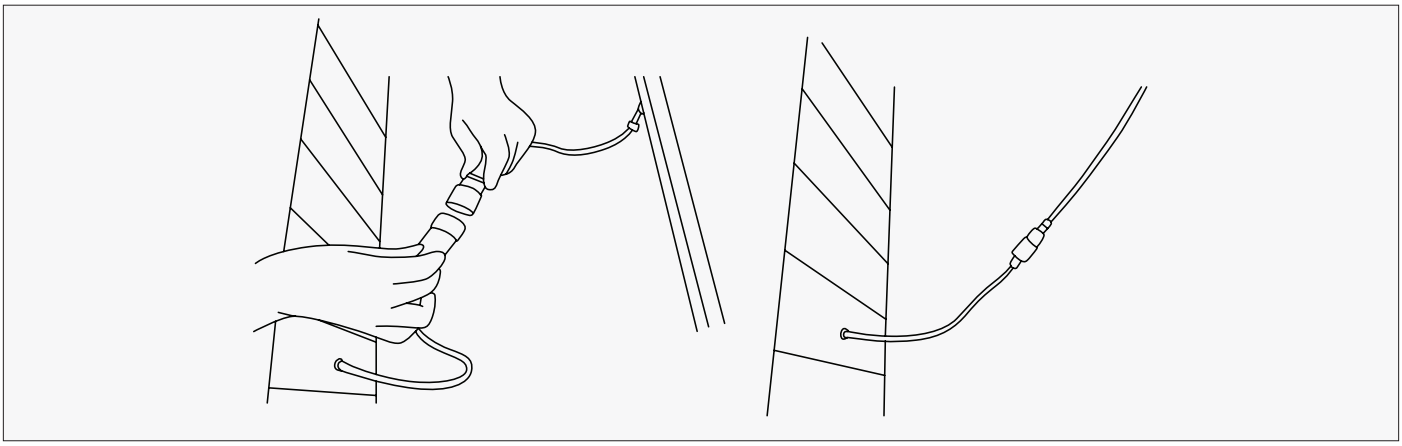

Connect the inner wires to the bench heater securely, ensuring proper alignment and a firm connection.

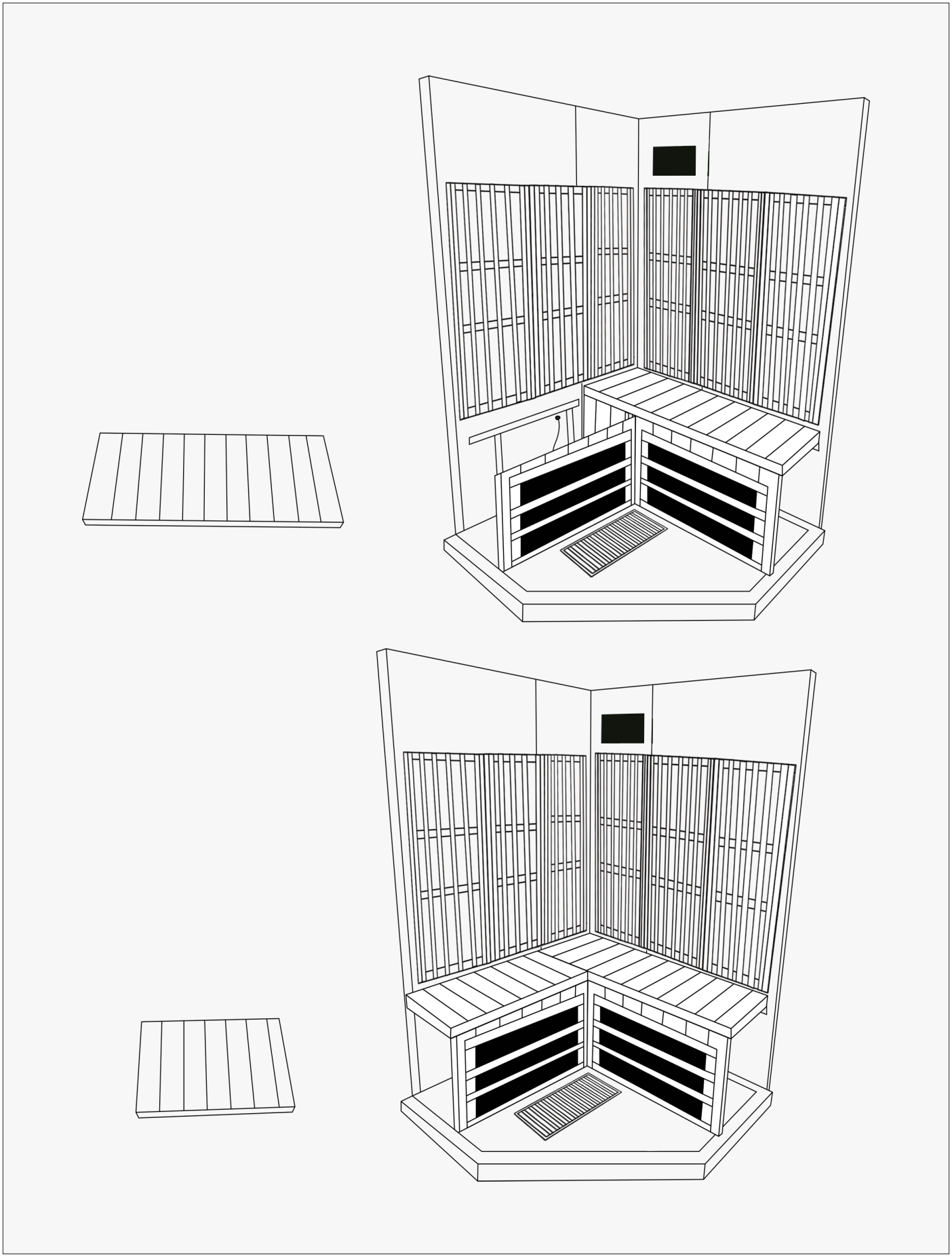

STEP 6. INSTALL THE BENCH PANEL FOR LEFT BACK AND RIGHT BACK PANELS

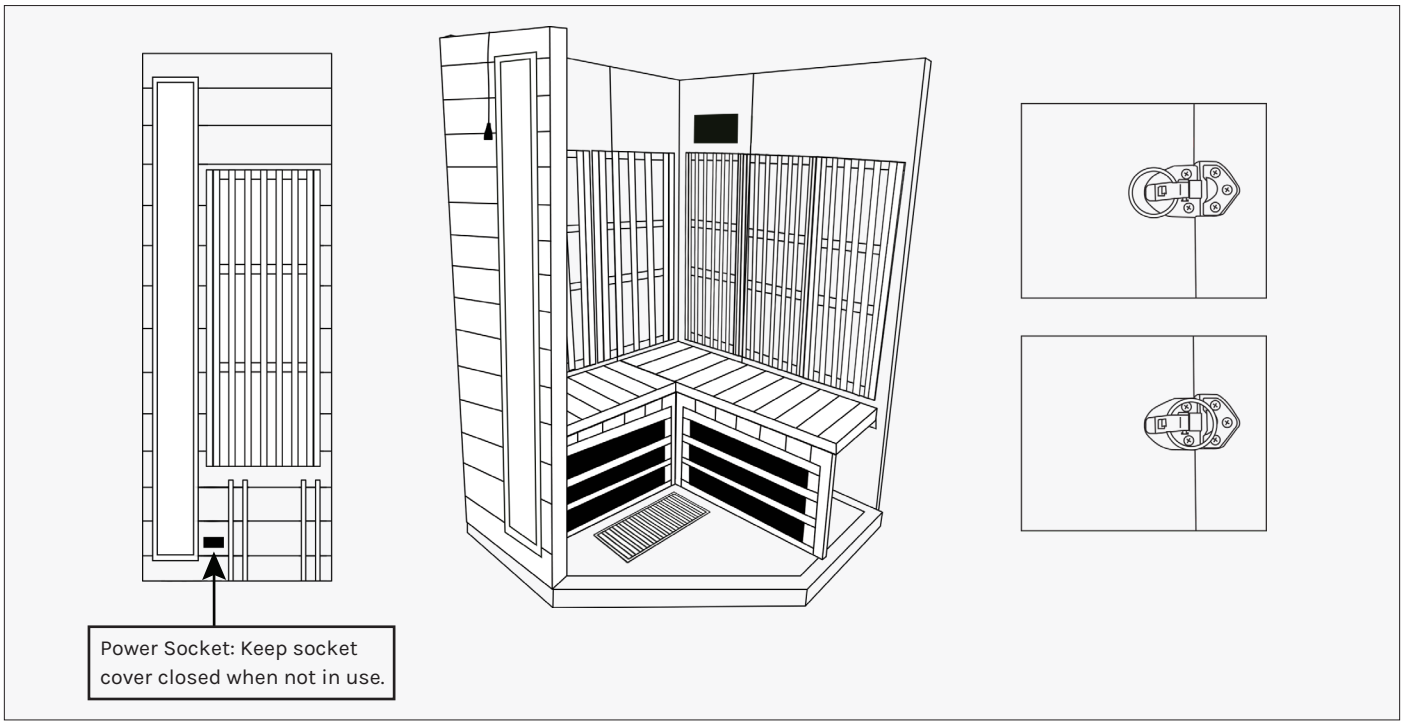

STEP 7. INSTALL THE LEFT SIDE PANEL

Pick up the left side panel, align it with the floor battens and the left rear panel, ensuring they fit together properly.

INSTALLATION: Use the outer locks to secure the panels together, as shown in the picture.

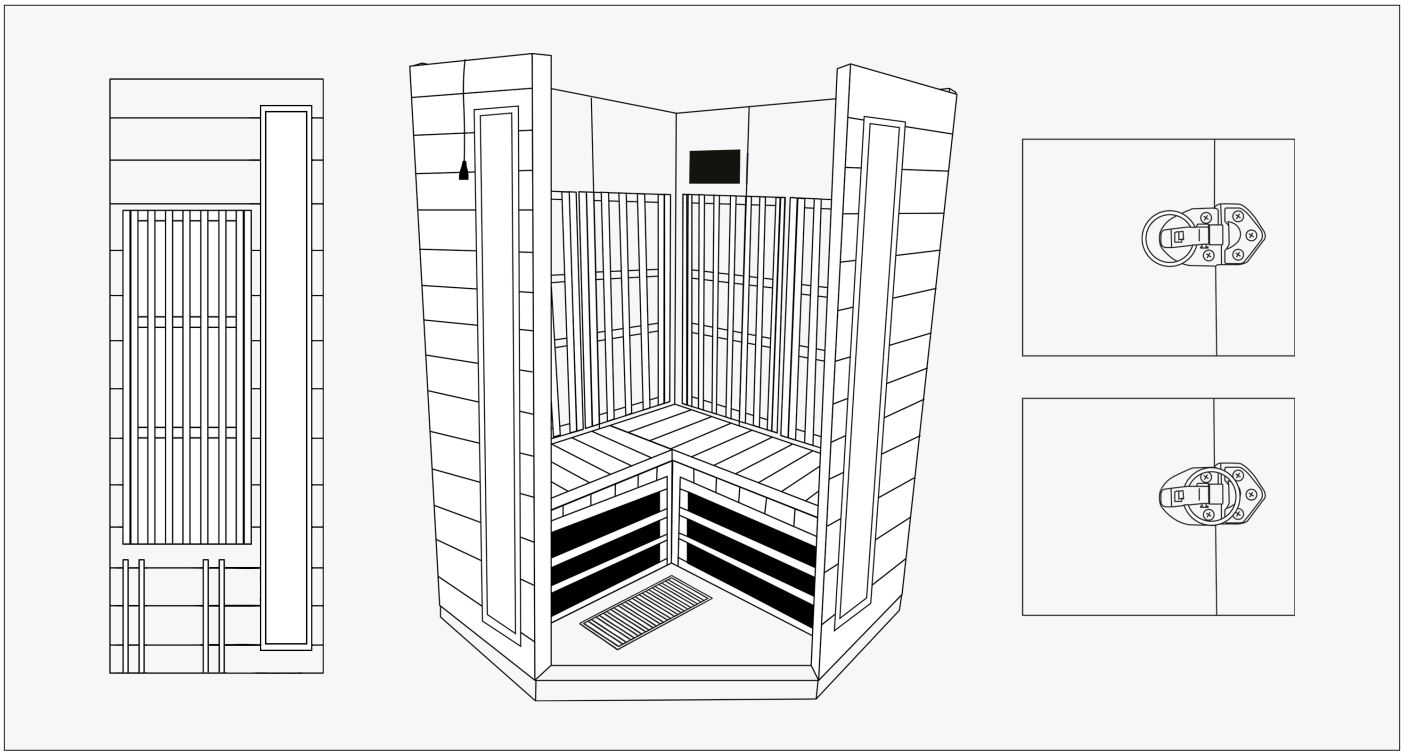

STEP 8. INSTALL THE RIGHT-SIDE PANEL

Pick up the right-side panel, align it with the floor battens and the right rear panel, ensuring a proper fit.

INSTALLATION: Use the outer locks to securely connect the panels, as shown in the picture.

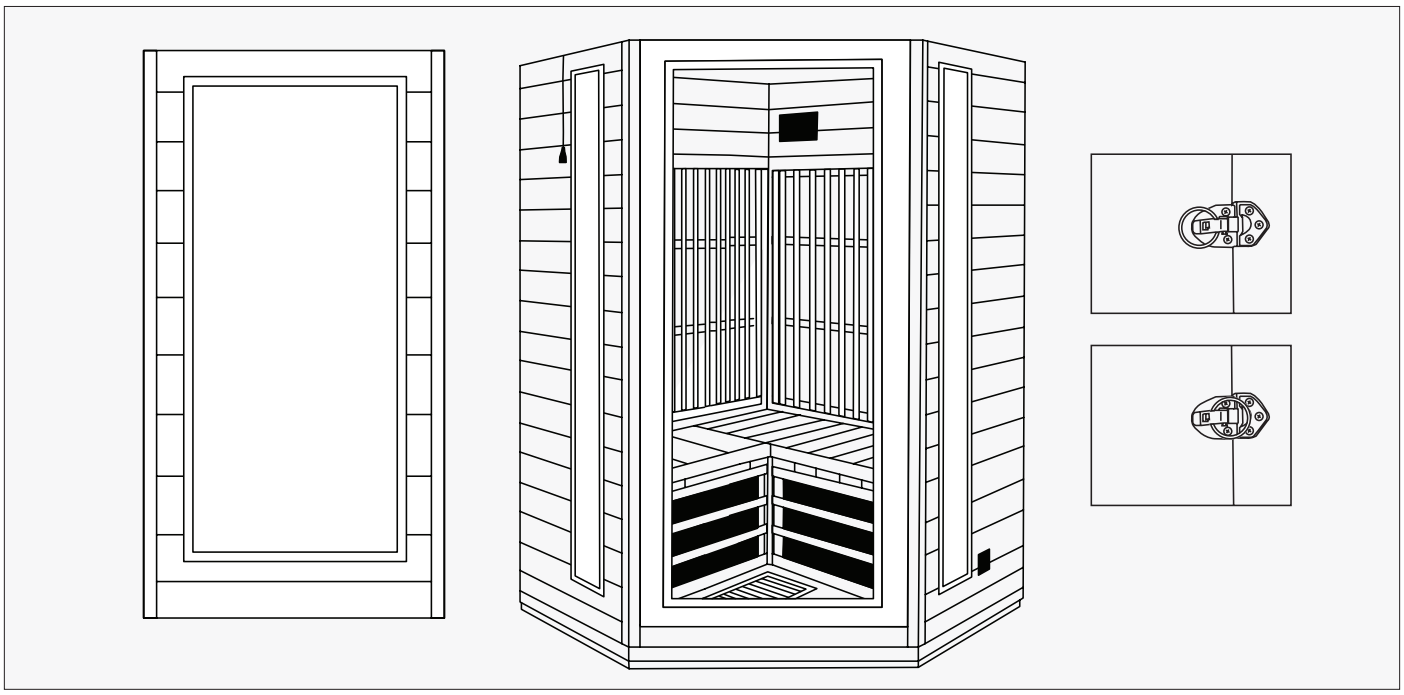

STEP 9. INSTALL THE FRONT PANEL

Install the front panel by positioning it correctly, aligning it with the floor cleats. Secure it to the left and right panels using the locking system.

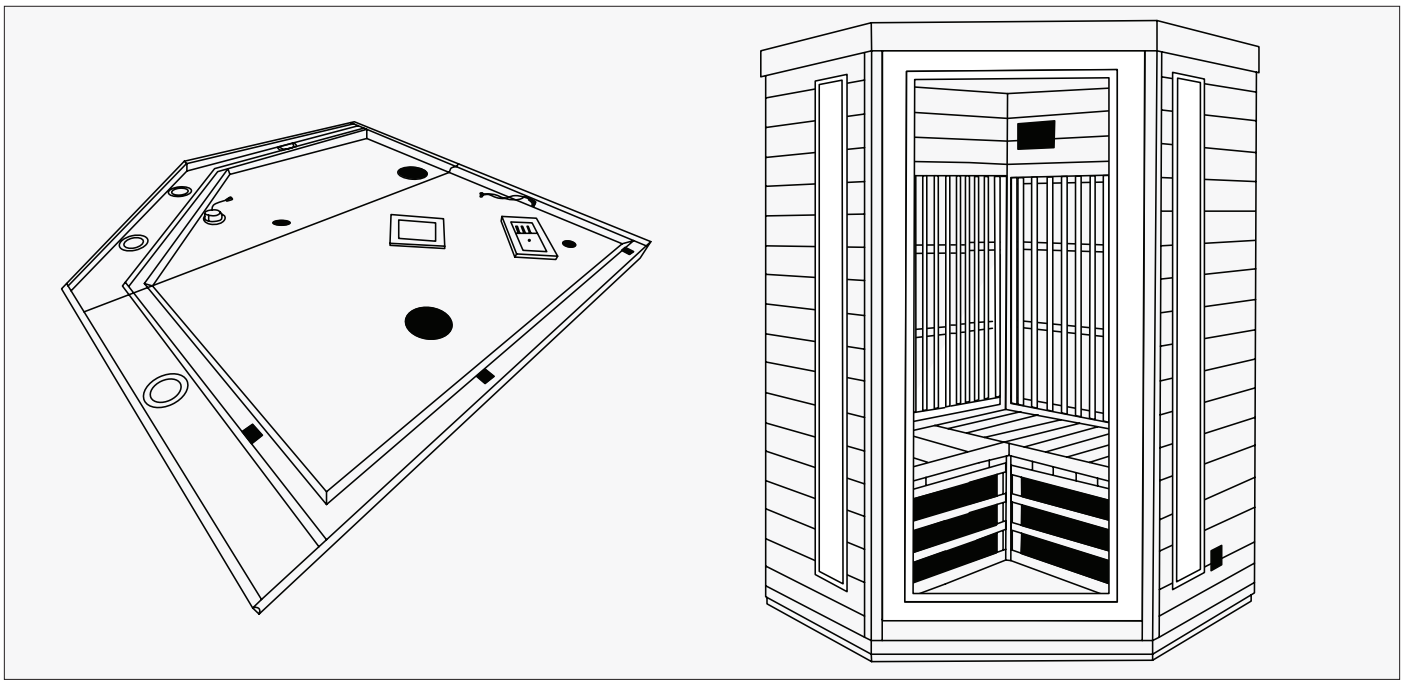

STEP 10. INSTALL THE TOP PANEL

Divide it into two pieces and fix them with six screws, each with a diameter of 4mm and a length of 35mm. The screws are evenly distributed.

Raise the roof panel high enough to align it perfectly with the roof frame and cab panels.
Ensure all cables are placed outside to allow sufficient space for the top panel installation. Properly route all cables and plugs through their corresponding holes, as they will be connected to the control box inside the roof. Position all wires outside to ensure enough space for securing the top panel.

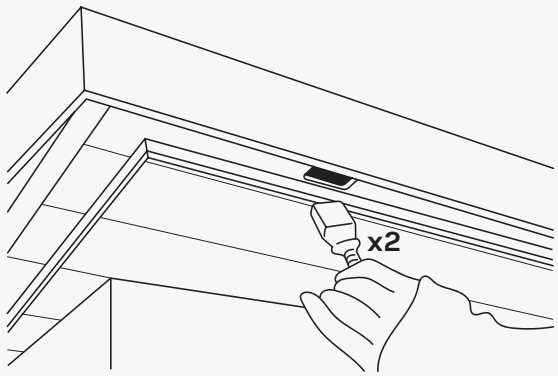

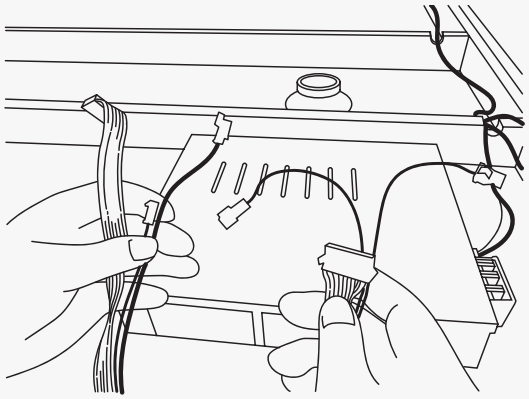

Display Panel Cable and Cable A

STEP 11. WIRE ASSEMBLY

As you lower the internal top panel into place, ensure that all the wires and connecting plugs mentioned above are guided through the corresponding holes in the top panel. These wires will connect to the controller on the internal top panel.

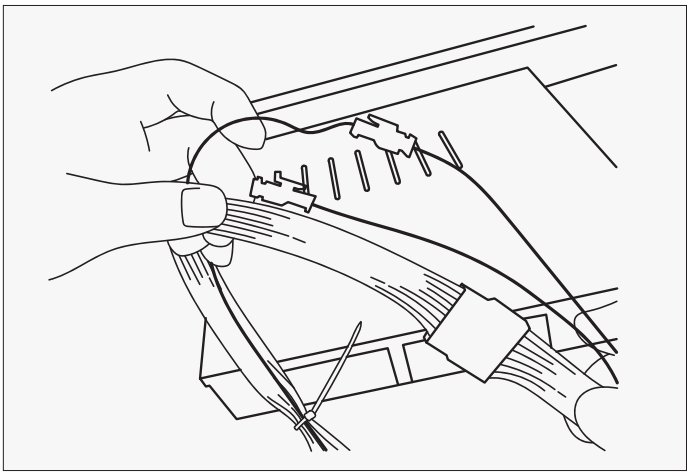

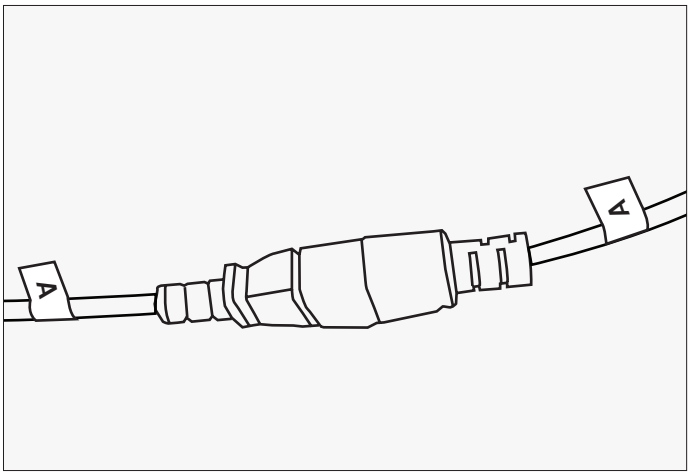

Next, feed the power plugs for the speakers, temperature sensor, and control box through the hole in the top panel.

Join the 2x labelled **A** cables together.

IV. CIRCUIT DIAGRAM OF THE ELECTRICAL BOX

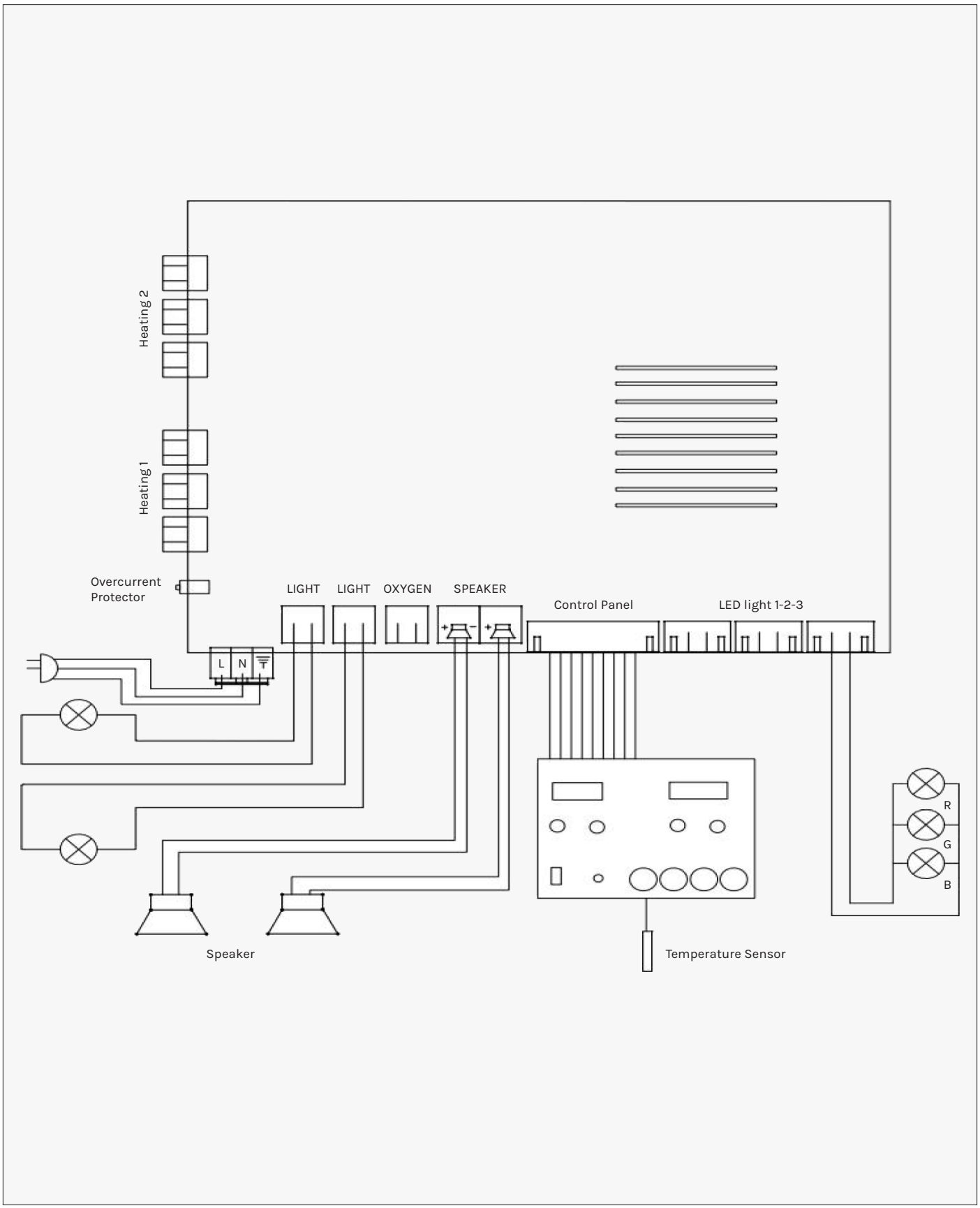

V. CONTROL PANEL OPERATION

Controller Brief Description

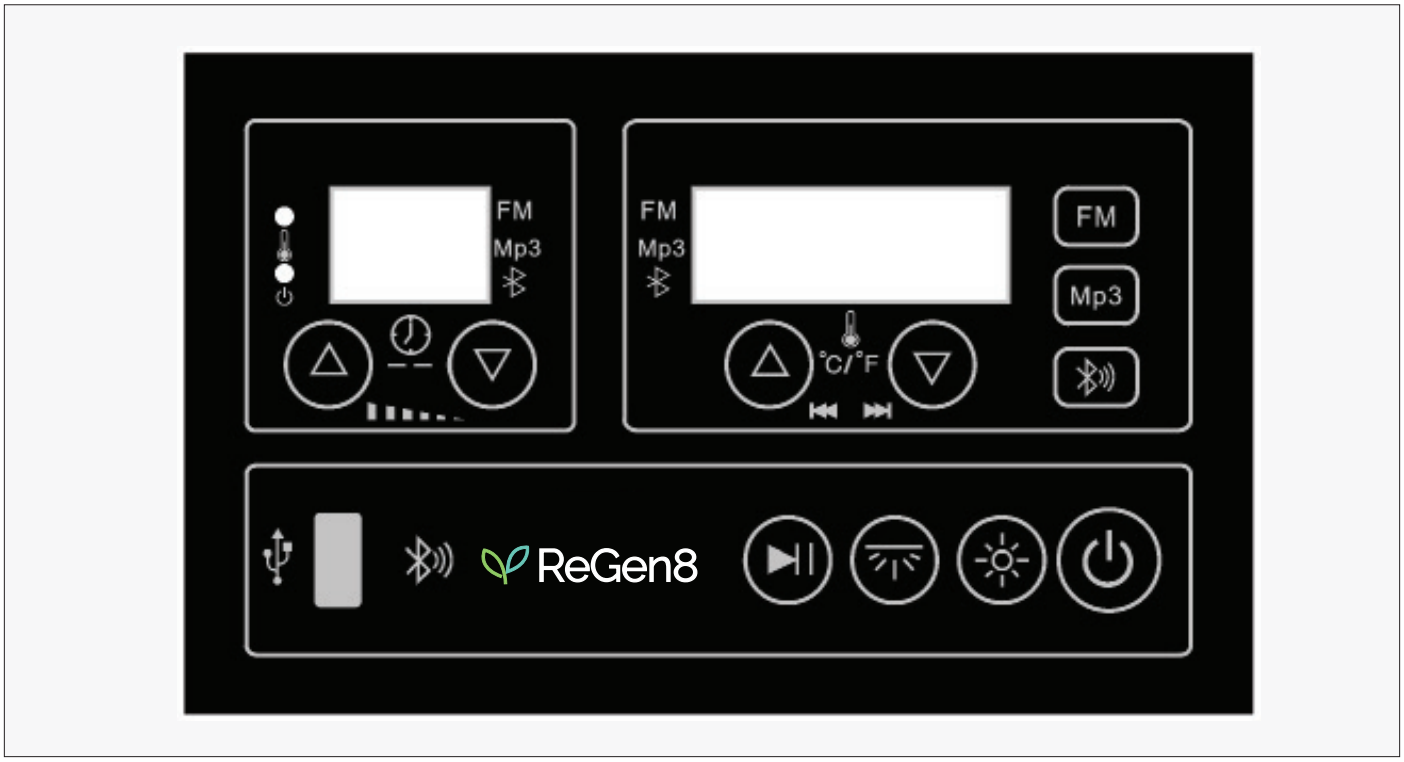

1. ON/OFF Button:

ON: When you plug the unit into the electrical outlet, the power indicator will flash. Press the ON/OFF button to turn the sauna on immediately. The LCD will display the last used settings for both temperature and time.

OFF: During normal operation, press the ON/OFF button again to turn off the sauna. The unit will shut down, and only the power indicator will continue to flash.

2. Temperature Setting:

When not using MP3/FM/BT display, press the temperature [up] or [down] button to adjust the temperature setting. Holding the [up] or [down] button will allow the temperature to increase or decrease continuously. After adjusting the temperature, the system will automatically exit the setting mode after about 5 seconds and return to displaying the current actual temperature.

3. Time Setting:

When not using MP3/FM/BT display, press the time [up] or [down] button to adjust the time. Holding the [up] or [down] button will allow the time to increase or decrease continuously. After adjusting the time, the system will automatically exit the setting mode after about 5 seconds and return to displaying the actual temperature. When the time is set to "00," the heaters will stop, and a reminder sound will beep 5 times.

4. Fahrenheit/Celsius Settings:

When adjusting the temperature, press both the [up] and [down] buttons simultaneously to toggle between Fahrenheit and Celsius.

5. Reading Light Control:

In normal operation, press the light button once to turn the reading light on. Press it again to turn the light off. The reading light can also be controlled when the sauna is turned off.

6. Color Light Control:

When the sauna is powered on, the color light will automatically illuminate. Press the color light button once to display a white light. Press the button repeatedly to cycle through the following colors: red, green, blue, yellow, purple, automatic color-changing mode, and back to off.

7. FM Radio:

- Press the FM button once to enter FM radio mode. The screen will display the "F-" symbol along with the FM channel.
- Use the right-side "temperature +, -" buttons to change the channel, and the left-side "time +, -" buttons to adjust the volume.
- Press the play/pause button to pause or resume the radio.
- The channel selection range is 76.0-108.0 MHz. When searching for stations, the temperature and time display windows will show the frequency being searched (e.g., 103.3). After about 5 seconds, the display will automatically return to showing the temperature and time.

8. MP3 Player:

- Press the Mp3 button twice to enter MP3 player mode. The screen will display the "P-" symbol, and the first song will begin playing.
- Use the right-side "temperature +, -" buttons to select the previous or next song, and the left-side "time +, -" buttons to adjust the volume.
- Press the play/pause button to pause or resume the MP3.
- When selecting songs using the "temperature +, -" buttons, the temperature display window will show the track number, and the time display window will show the current track details. After about 5 seconds, the display will automatically return to showing the temperature and time.

9. Bluetooth:

- Press the button three times to enter Bluetooth mode. The screen will display "B-". After hearing a sound, search for the Bluetooth name on your mobile device to connect.

- Once connected, you can play music from your mobile phone. Use the play/pause button to control playback.

- To adjust the volume, use the left-side "Time +, -" buttons.

- After 5 seconds, the display will automatically return to showing the temperature and time.

- The effective Bluetooth range is 10 meters. If playback fails after connection, disconnect Bluetooth on your mobile phone, unplug and re-plug the sauna, then reconnect via Bluetooth.

10. Switching Between FM/MP3/Bluetooth:

This button allows you to switch between FM radio, MP3, and Bluetooth modes.

11. Heater Control:

- This button turns all heaters on or off. After pressing the ON/OFF button to activate the sauna, press this button to start the heaters.

- If the display shows "--", it means the heaters are not working.

TECHNICAL PARAMETERS:

1. Power supply 240V 11A
2. Temperature setting range: 0~ 65°C Or 60 ~ 150°F
3. Time setting range: 0 to 90 minutes
4. Digital temperature sensor
5. Soft touch key

VI. SAUNA OPERATION GUIDE

1. Precautions

- Ensure all circuitry and plugs meet safety requirements.
- Set the temperature and time to a comfortable level, typically 120°F for 30 minutes.
- Drink a glass of water before using the sauna.
- If using the sauna continuously for over two hours, turn it off for at least one hour before resuming use.
- Avoid burns – do not touch the heating elements.
- **Fire Hazard:** Do not dry clothes or leave towels inside the sauna to avoid the risk of fire.

2. Operating the Sauna

- **Power Connection:**
  1. Plug the sauna into a 240V 11A wall outlet.
  2. Do not share the outlet with other appliances.
  3. Always unplug the sauna when not in use.

- **Temperature Adjustment:**
  1. Press the 'Temperature' button to adjust the heat level.
  2. The 'Heat' indicator light will be on while heating.
  3. Press '+' to increase the temperature or '-' to decrease it. Holding the button for three seconds adjusts the temperature more quickly.
  4. Once the sauna reaches the set temperature, the heat indicator light will turn off.

- **Lighting:** Press the 'Light' button to turn the interior light on or off.
- **Ventilation:** If the sauna feels too warm or stuffy, open the ceiling vent or front door for airflow.

- **Session Timer:**
  1. Press the 'Function' button until the 'Time' setting blinks.
  2. Use '+' and '-' to adjust the session time (5 to 90 minutes).
  3. Holding the button for three seconds increases the time rapidly.
  4. When the display shows '05', the timer will beep, and the sauna will automatically shut off after 5 minutes.
  5. To extend your session, reset the timer as needed.

- **Shutting Down:** After use, turn off the sauna and unplug the power cable.

3. Safety Precautions

- **Fire Hazard:** To avoid the risk of fire, do not dry clothes or leave towels inside the sauna.

- **Burn & Shock Prevention :**
  1. Avoid touching or using metal tools on the net cover of the Carbon heater elements.
  2. Do not touch the light bulb while inside the sauna. If the bulb needs to be replaced, turn off the sauna and wait until the unit and bulb are completely cool before handling.
  3. Never spray water onto the Carbon heater tubes, as this may cause electric shock or damage the heater elements.

4. Usage Restrictions

Do **NOT** use the sauna if you have any of the following conditions:

- Open wounds
- Eye diseases
- Severe sunburns
- **Health concerns:** Elderly individuals, those with medical conditions, pregnant women, and infants should not use the sauna.
- Children over 6 years old may use the sauna under adult supervision.
- Temperature-sensitive medical conditions: If you have a health condition affected by heat, consult a doctor before use.
- **Pets:** Do not place animals inside the sauna.

VII. TROUBLESHOOTING

Number	Problems	Possible reasons	Countermeasure
1	Power indicator light not working	The socket is not functioning properly	Check the power supply and socket to see if replacement is necessary
		The fuse is burned out	Replace the fuse
2	Function indicator light not working	The indicator light is faulty	Repair or replace the control panel
		A circuit or accessory related to the function is broken	Repair or replace the circuit or accessories related to the malfunctioning function
3	Carbon heater is not producing heat or carbon rays	The heater is broken	Replace the heater with a new one of the same specifications
		The heater's lifespan has decreased from frequent use	
		The fuse is burned out	Replace the fuse with one of the same specifications
		Incorrect circuit connection for the heater	Check and reconnect the circuit tightly
		The circuit or accessories related to the control panel are broken	Repair or replace if necessary
4	Abnormal temperature inside the sauna room	Heater malfunctions	Replace the heater with a new one of the same specifications
		Incorrect operation settings	Reset the settings
		Faulty circuit or temperature control accessories	Repair or replace the control panel
5	Unusual smell or noise inside the sauna	Circuit problems (e.g., broken accessories, short circuit, or control system failure)	1. Cut off the power and check the power supply and voltage 2. Identify the faulty components 3. Fix the issue
6	Light not working	Bulb filament is burned out	Replace the bulb
		Bulb or lamp fixture is loose	Replace the bulb and raise the reed in the lamp fixture, tighten the bulb, and reconnect it properly
		Socket is broken	Replace the socket
		Electrical control panel issue	Repair or replace the control panel
7	No sound from the speakers	Speaker is broken	Replace the speaker with a new one of the same specifications
		Loose electrical connection	Reconnect and secure the electrical connection
		Power indicator light for the MP3 is not turning on	Turn on the switch to operate.
		MP3 is not working	Check the fuse and all operating buttons. Replace with a new part.

VIII. MAINTENANCE

CLEANING:

- Clean the faceplate using a damp towel. If necessary, use a small amount of hand soap mixed with warm water.
- Clean the sauna room with a damp cotton towel and dry it with a clean, dry towel.
- Do not use benzene, alcohol, or strong cleaning chemicals on the sauna, as they may damage the wood and its protective layer.

IMPORTANT NOTE:

Do not leave the sauna or the music player on for more than 2 hours at a time.

TRANSPORTATION & STORAGE

1. Avoid exposing the sauna to rain, snow, or any strong impacts during transport.
2. Store the sauna in a dry environment; do not store it in damp or humid areas.

PACKING LIST

1 x Infrared sauna room with floor & cover
11 x Carbon Heaters (2640W)
2 x Cup shelves
1 x Light bulb
1 x Light housing
1 x Music player with 2x speakers
1 x Interior control panel cover
1 x Backrest
1 x Bag of screws and bolts
1 x Door handle & screwdriver
1 x Instruction manual
1 x Oxygen ionizer

IX. WARRANTY

AUSTRALIAN CONSUMER LAW

Many of our products come with a guarantee or warranty from the manufacturer. In addition, they come with guarantees that cannot be excluded under the Australian Consumer Law. You are entitled to a replacement or refund for a major failure and compensation for any other reasonably foreseeable loss or damage.

You are entitled to have the goods repaired or replaced if the goods fail to be of acceptable quality and the failure does not amount to a major failure. Full details of your consumer rights may be found at **www.consumerlaw.gov.au**.

Please visit our website to view our full warranty terms and conditions:
http://www.lifespanfitness.com.au/warranty-repairs

WARRANTY AND SUPPORT

Any claim against this warranty must be made through your original place of purchase.
Proof of purchase is required before a warranty claim may be processed.

If you have purchased this product from the Official Lifespan Fitness website, please visit
https://lifespanfitness.com.au/warranty-form

For support outside of warranty, if you wish to purchase replacement parts or request a repair or service, please visit h**ttps://lifespanfitness.com.au/warranty-form** and fill in our Repair/Service Request Form or Parts Purchase Form.

Scan this QR code with your device to go to **lifespanfitness.com.au/warranty-form**

X. SECURITY SUPPORT INFORMATION

REPORTING

To report a cyber security issue, please email **support@gflgroup.com.au** with product details and a description of the issue.

We will acknowledge receipt and provide updates as it is investigated.

DEVICE SUPPORT PERIOD

This product will receive security updates for a minimum of 12 months from the date of purchase.

LIFESPAN FITNESS | ReGen8

WWW.LIFESPANFITNESS.COM.AU