CORTEX®

BN-9 FID Bench (Flat, Incline, Decline)

USER MANUAL

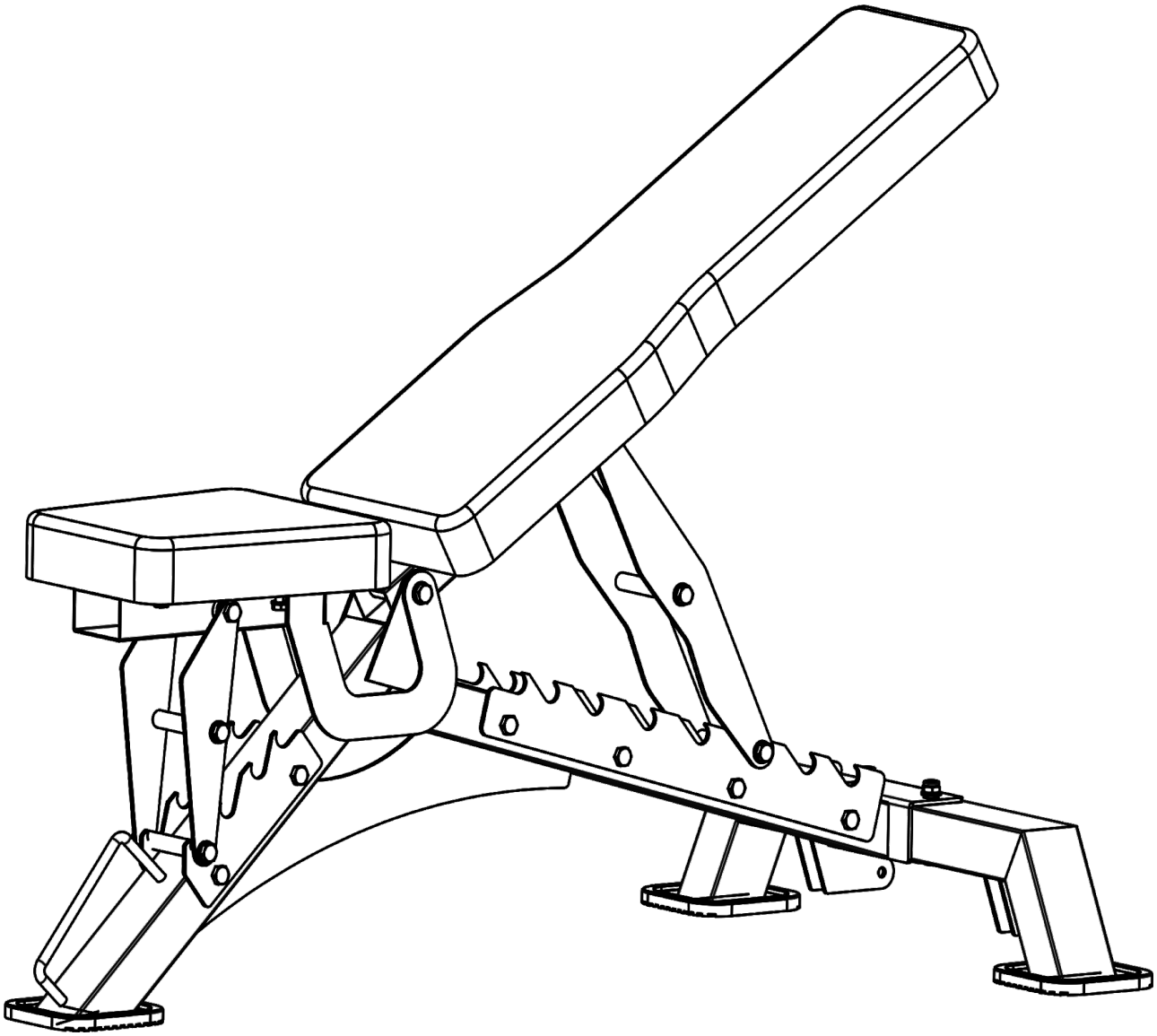

Product may vary slightly from the item pictured due to model upgrades.

Read all instructions carefully before using this product.
Retain this owner's manual for future reference.

NOTE:
This manual may be subject to updates or changes. Up to date manuals are available through our website at www.lifespanfitness.com.au

TABLE OF CONTENTS

I. Important Safety Instructions 03

II. Care Instructions 04

III. Parts List 05

IV. Assembly Instructions 06

V. Exercise Guide 10

VI. Warranty 12

I. IMPORTANT SAFETY INSTRUCTIONS

⚠ WARNING: Read all instructions before using this product.

Please keep this manual with you at all times

- It is important to read this entire manual before assembling and using the equipment. Safe and effective use can only be achieved if the equipment is assembled, maintained, and used properly. **Please note:** It is your responsibility to ensure that all users of the equipment are informed of all warnings and precautions.

- Before starting any exercise program, you should consult your doctor to determine if you have any medical or physical conditions that could put your health and safety at risk, or prevent you from using the equipment properly. Your doctor's advice is essential if you are taking medication that affects your heart rate, blood pressure or cholesterol level.

- Be aware of your body's signals. Incorrect or excessive exercise can damage your health. Stop exercising if you experience any of the following symptoms: pain, tightness in your chest, irregular heartbeat, and extreme shortness of breath, lightheadedness, dizziness, or feelings of nausea. If you do experience any of these symptoms, you should consult your doctor before continuing with your exercise program.

- Keep children and pets away from the equipment. This equipment is designed for adult use only.

- Use the equipment on a solid, flat level surface with a protective cover for your floor or carpet. To ensure safety, the equipment should have at least 2 meters of free space around it.

- Before using the equipment, check that the nuts and bolts are securely tightened. If you hear any unusual noises coming from the equipment during use and assembly, stop immediately. Do not use the equipment until the problem has been rectified.

- Wear suitable clothing while using the equipment. Avoid wearing loose clothing that may get caught in the equipment or that may restrict or prevent movement.

- This equipment is designed for indoor and family use only.

- Care must be taken when lifting or moving the equipment so as not to injure your back.

- Always keep this instruction manual and assembly tools at hand for reference.

- The equipment is not suitable for therapeutic use.

II. CARE INSTRUCTIONS

- Lubricate moving joints with grease after periods of usage.
- Be careful not to damage plastic or metal parts of the machine with heavy or sharp objects.
- The machine can be kept clean by wiping it down using a dry cloth.
- Regularly check all moving parts and grasp whether there are signs of wear and damage, and if any, stop using the device immediately and contact the rear of my department.
- During inspection, all bolts and nuts must be fully fixed. If bolts or nuts are loose, please secure them in place.
- Check that the weld is free of cracks.
- Failure to perform daily maintenance may result in personal injury or equipment damage.

III. PARTS LIST

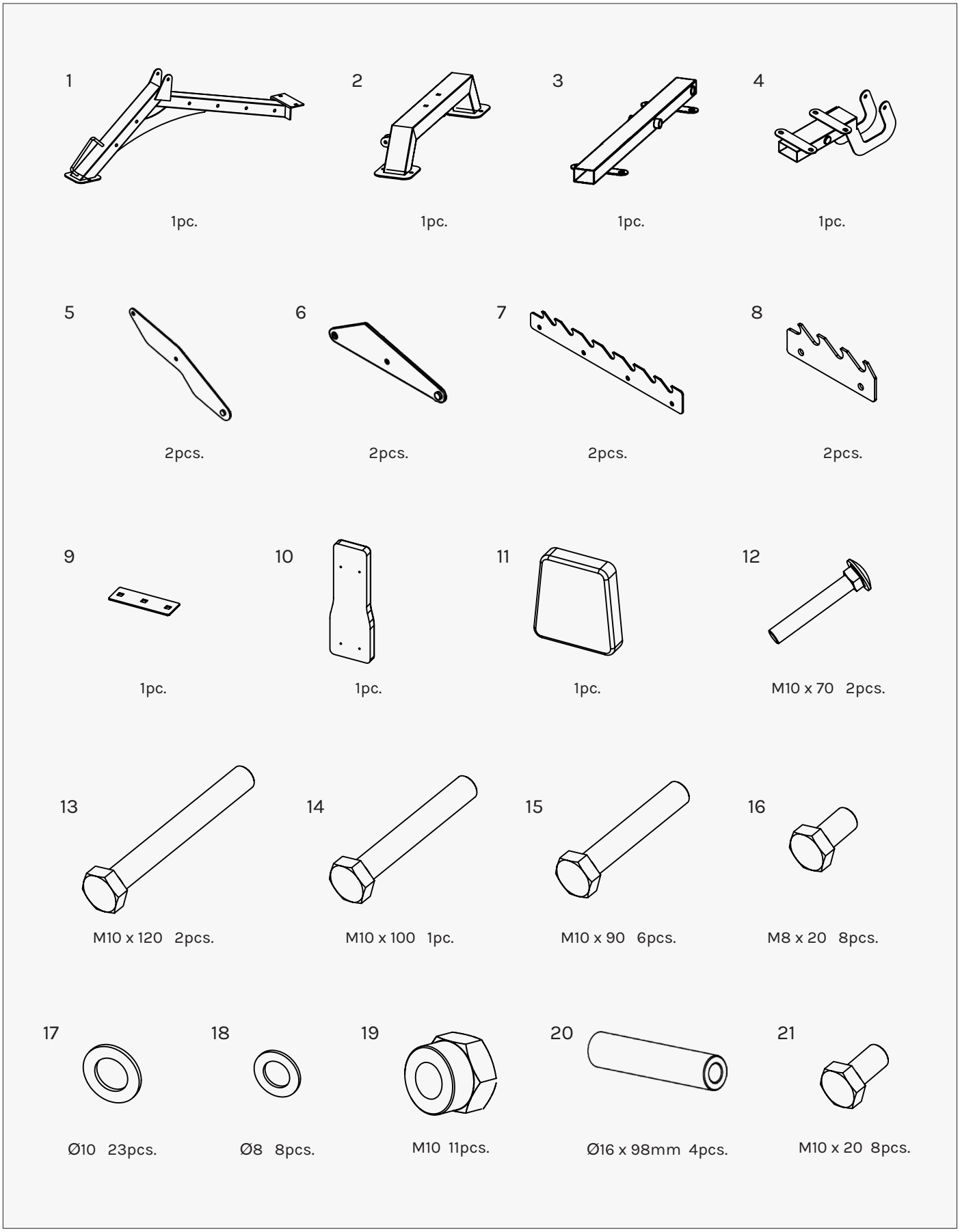

IV. ASSEMBLY INSTRUCTIONS

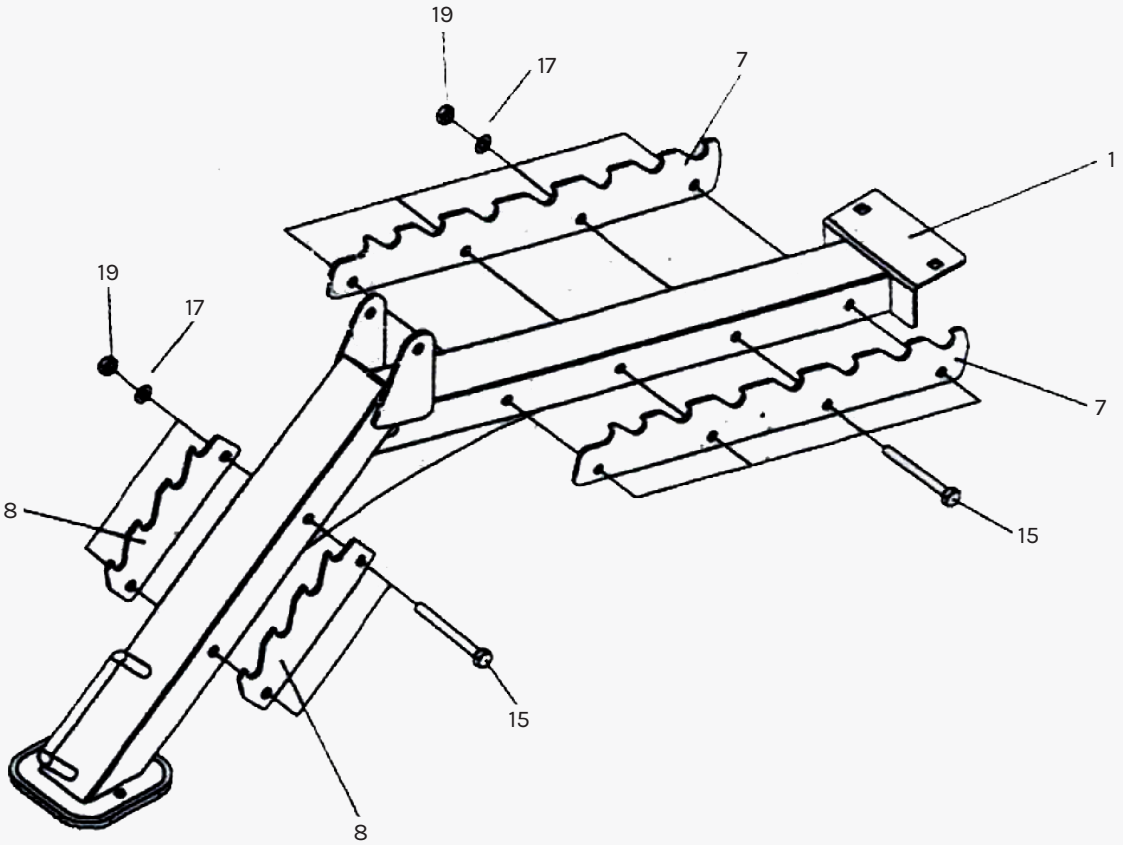

STEP 1

1. Install Backrest gear plate (#7) to Support pipe group (#1) using screws M10*90 (#15), Washer Ø10 (#17) and M10 Nut (#19).
2. Install Seat sub gear plate (#8) to Support pipe group (#1) using screws M10*90 (#15), Washer Ø10 (#17) and M10 Nut (#19).

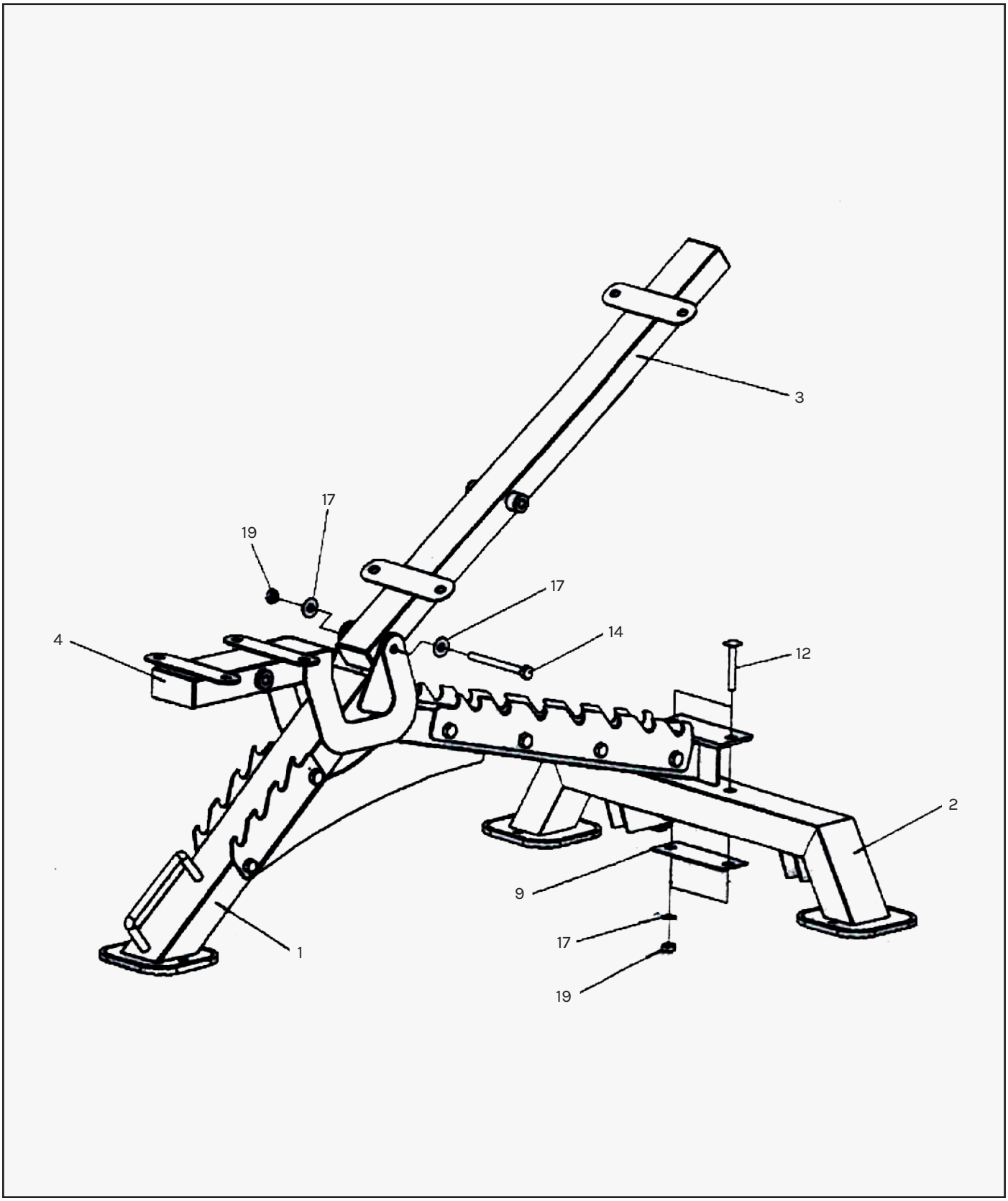

STEP 2

1. Install Support pipe group (#1) to Bottom pipe group (#2) using Connection plate (#9), Screw M10*70 (#12), Washer Ø10, and M10 Nut (#19).
2. Install the Backrest pipe (#3) together with Seat cushion pipe group (#4) into the middle of Support pipe group (#1) using Bolt M10*105 (#14), Washer Ø10 (#17), and M10 Nut (#19).

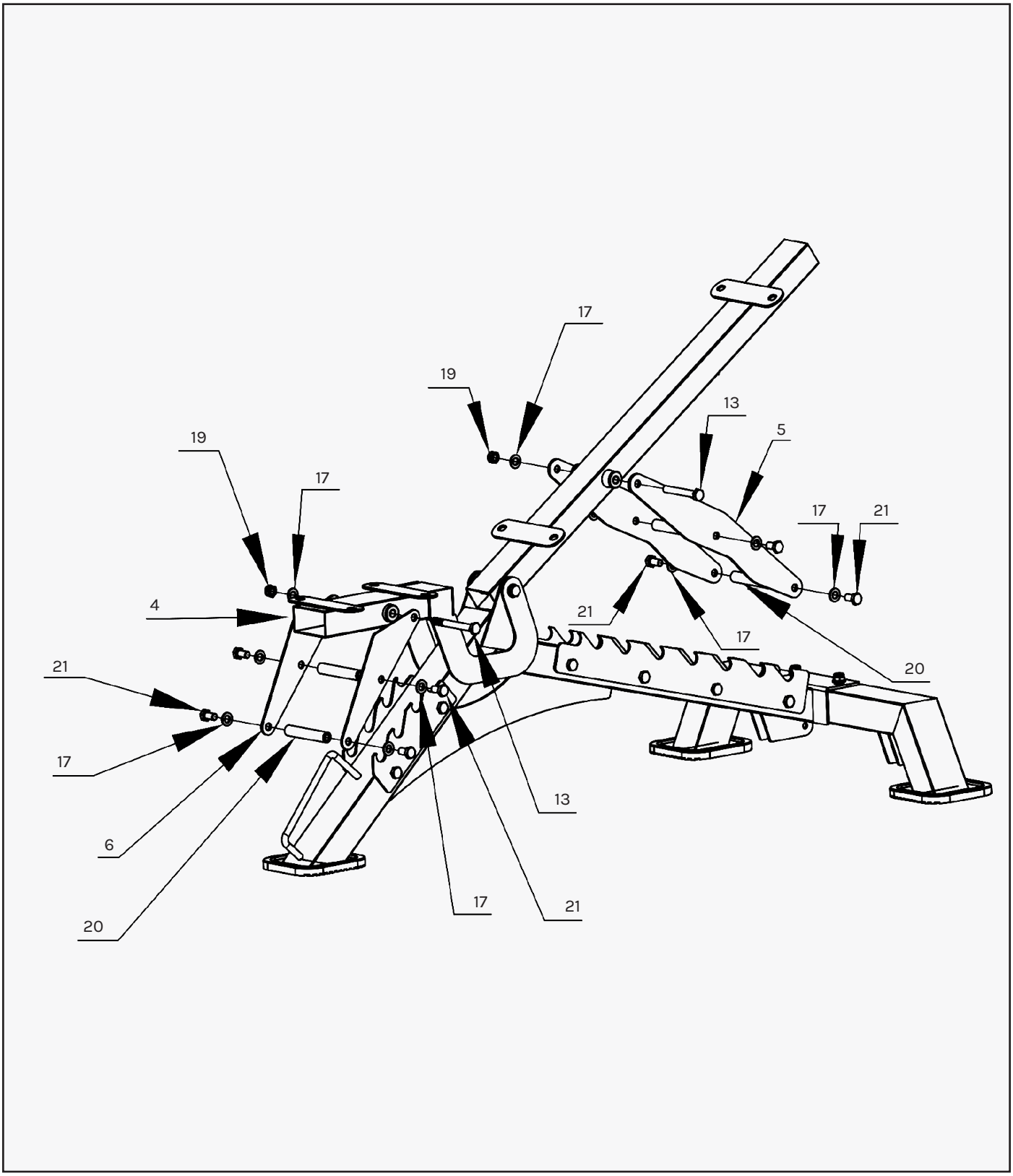

STEP 3

1. Install backrest adjustment set to backrest pipe (#3) using bolts M10*120 (#13) and washers Ø10 (#17) and M10 nut (#19). Connect (#5) and (#20) with bolts M10*20 (#21) washer Ø10 (#17). Insert the other side of the connected (#5) into the backrest gear plate (#7).
2. Connect (#6) and (#20) with bolts M10*20 (#21) washer Ø10 (#17). Attach the connected (#6) to the seat gasket group (#4) with bolts M10*120 (#13). Washers Ø10 (#17) and M10 nuts (#19).

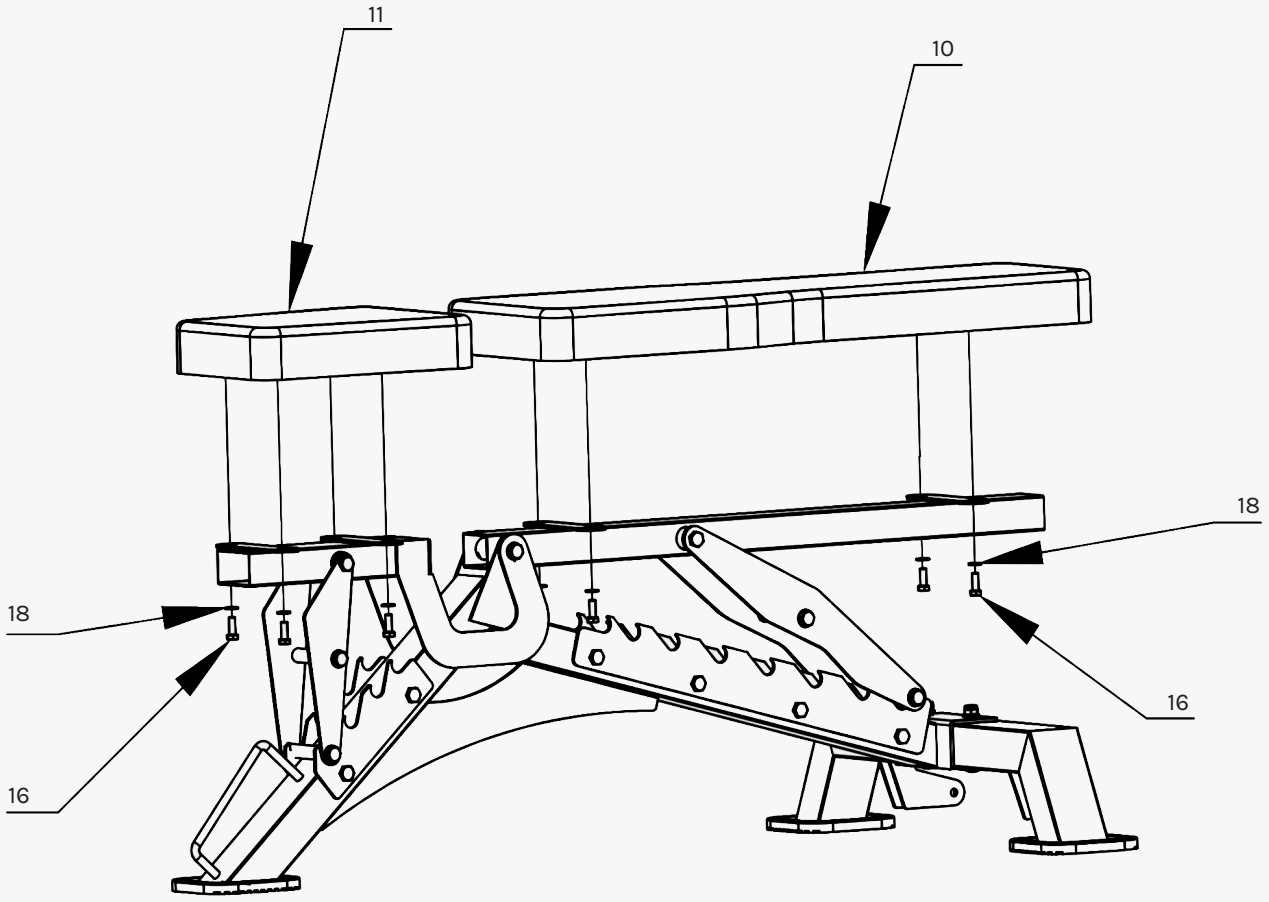

STEP 4

1. Attach the Backrest cushion (#10) and the Seat cushion (#11) onto the Backrest pipe (#3) and Seat cushion pipe group (#4) using Bolts M8*20 (#16) and Washer Ø8 (#18).

V. EXERCISE GUIDE

PLEASE NOTE:

Before beginning any exercise program, consult your physician. This is important for individuals over the age of 45 or with pre-existing health problems.

The pulse sensors are not medical devices. Various factors, including the user's movement, may affect the accuracy of heart rate readings. The pulse sensors are intended only as an exercise aid in determining heart rate trends in general.

Exercising is great way to control your weight, improve your fitness and reduce the effect of aging and stress. The key to a healthy lifestyle is to make exercise a regular and enjoyable part of your everyday life.

The condition of your heart and lungs and how efficient they are in delivering oxygen via your blood to your muscles is an important factor to your fitness. Your muscles use this oxygen to provide enough energy for daily activity. This is called aerobic activity. When you are fit, your heart will not have to work so hard. It will pump a lot fewer times per minute, reducing the strain on your heart.

So as you can see, the fitter you are, the healthier and greater you will feel.

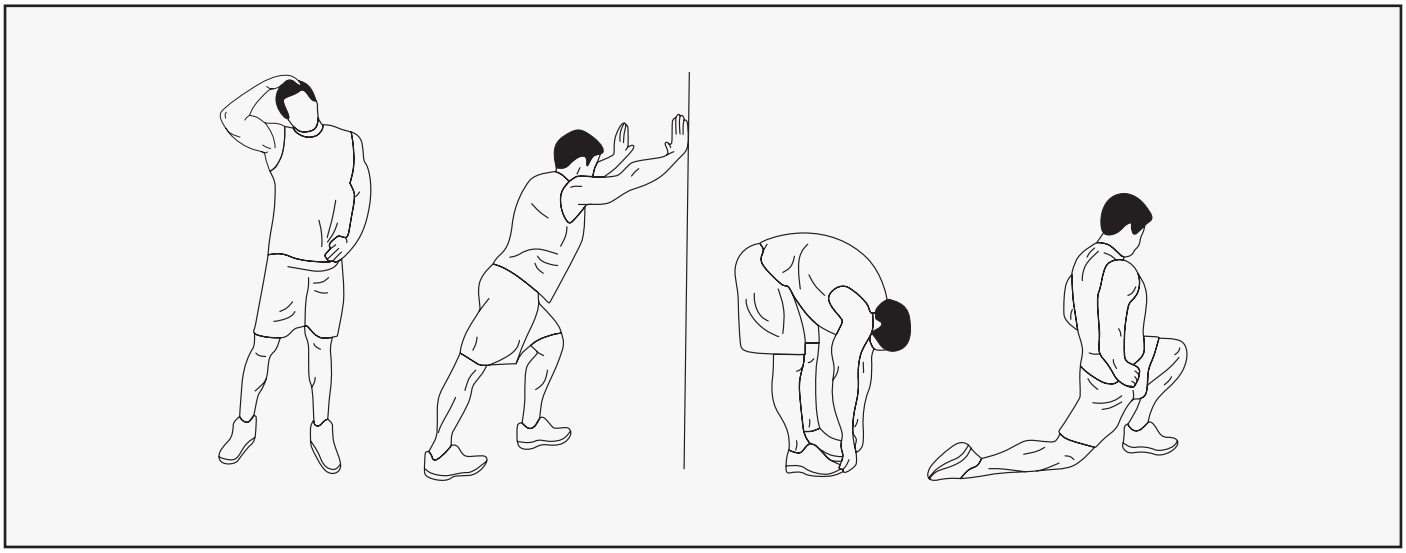

WARM UP

Start each workout with 5 to 10 minutes of stretching and some light exercises. A proper warm-up increases your body temperature, heart rate and circulation in preparation for exercise. Ease into your exercise.

After warming up, increase the intensity to your desired exercise program. Be sure to maintain your intensity for maximum performance. Breathe regularly and deeply as you exercise.

COOL DOWN

Finish each workout with a light jog or walk for at least 1 minute. Then complete 5 to 10 minutes of stretching to cool down. This will increase the flexibility of your muscles and will help prevent post-exercise problems.

WORKOUT GUIDELINES

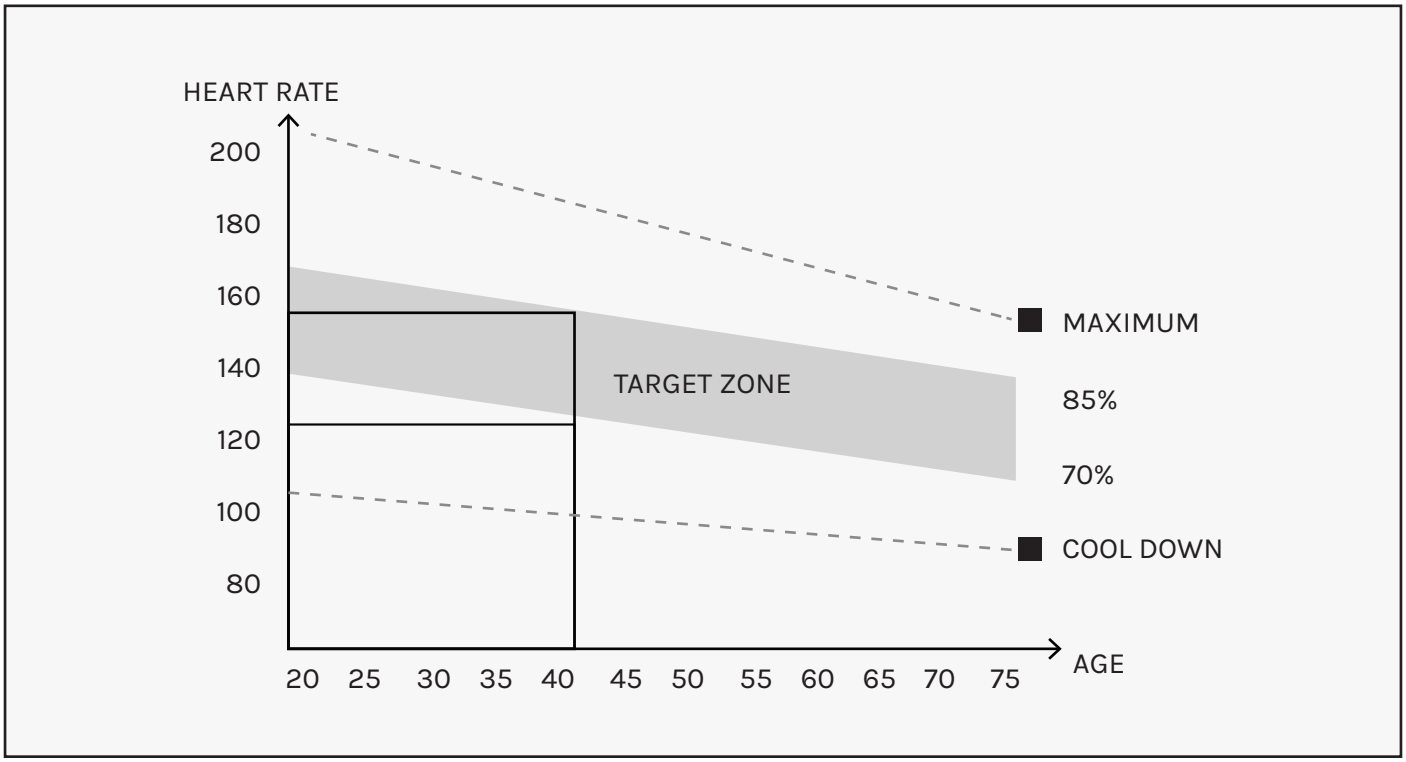

This is how your pulse should behave during general fitness exercise. Remember to warm up and cool down for a few minutes.

VI. WARRANTY

AUSTRALIAN CONSUMER LAW

Many of our products come with a guarantee or warranty from the manufacturer. In addition, they come with guarantees that cannot be excluded under the Australian Consumer Law. You are entitled to a replacement or refund for a major failure and compensation for any other reasonably foreseeable loss or damage.

You are entitled to have the goods repaired or replaced if the goods fail to be of acceptable quality and the failure does not amount to a major failure. Full details of your consumer rights may be found at **www.consumerlaw.gov.au**.

Please visit our website to view our full warranty terms and conditions:
http://www.lifespanfitness.com.au/warranty-repairs

WARRANTY AND SUPPORT

Any claim against this warranty must be made through your original place of purchase. Proof of purchase is required before a warranty claim may be processed.

If you have purchased this product from the Official Lifespan Fitness website, please visit the website:

Australian Website: https://www.lifespanfitness.com.au/pages/product-support-forms
New Zealand Website: https://lifespanfitness.co.nz/pages/warranty-claim

For support outside of warranty, if you wish to purchase replacement parts or request a repair or service, please visit the above links and fill in our Repair/Service Request Form or Parts Purchase Form.

Scan this QR code with your device to go to:

Australian Website

New Zealand Website

SECURITY SUPPORT INFORMTAION

REPORTING

To report a cyber security issue, please email **support@gflgroup.com.au** with product details and a description of the issue.

We will acknowledge receipt and provide updates as it is investigated.

DEVICE SUPPORT PERIOD

This product will receive security updates for a minimum of 12 months from the date of purchase.

CORTEX®

WWW.LIFESPANFITNESS.COM.AU