CORTEX®

SM25 Multi Gym

(Dual Stack Functional Trainer, Smith Machine, Half Rack)

USER MANUAL

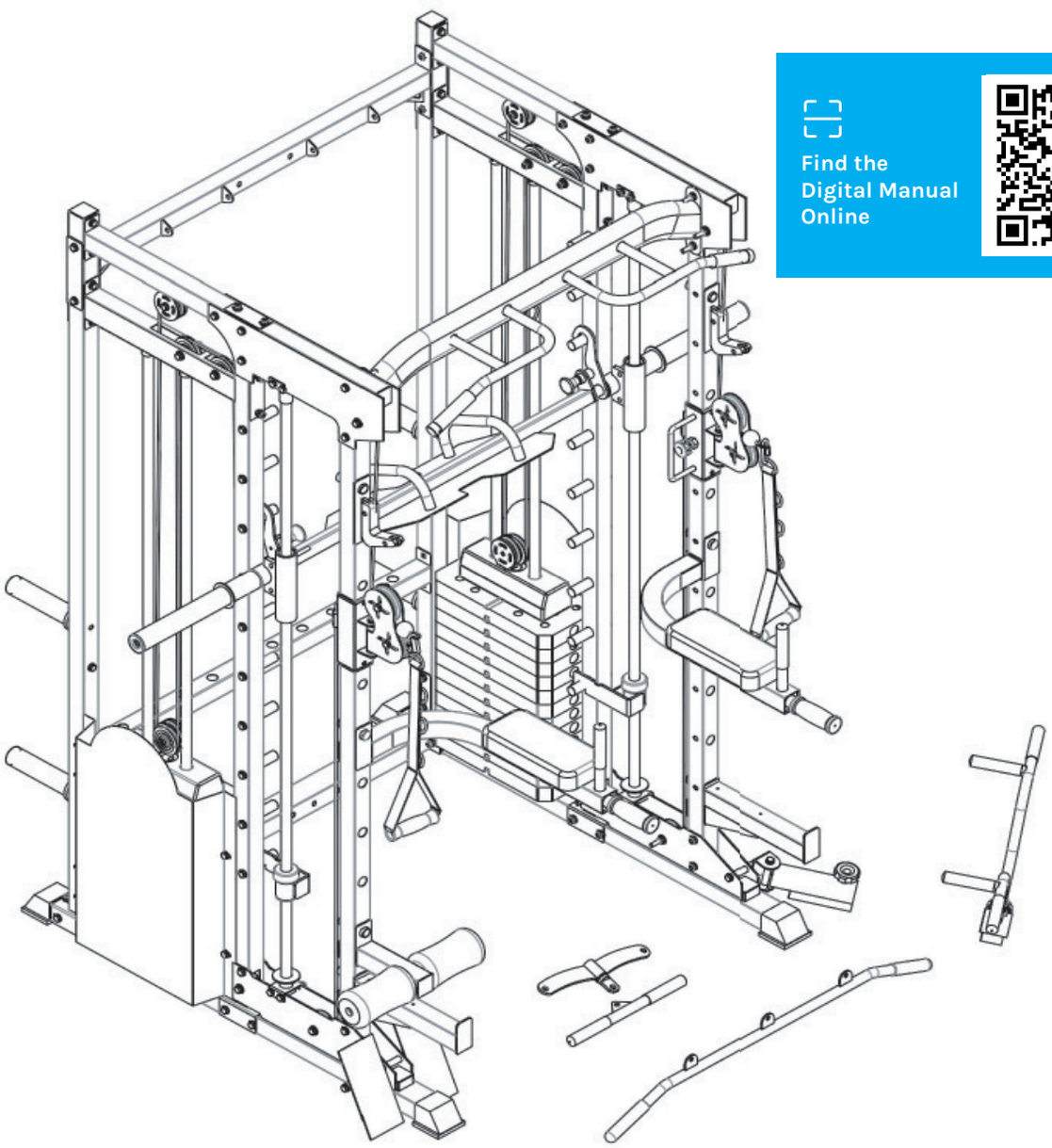

Find the Digital Manual Online

Product may vary slightly from the item pictured due to model upgrades.

Read all instructions carefully before using this product. Retain this owner's manual for future reference.

NOTE:
This manual may be subject to updates or changes. Up to date manuals are available through our website at www.lifespanfitness.com.au

TABLE OF CONTENTS

I. Important Safety Instructions **03**

II. Care Instructions **04**

III. Parts List **05**

IV. Assembly Instructions **08**

V. Exercise Guide **28**

VI. Maintenance **29**

VII. Warranty **30**

I. IMPORTANT SAFETY INSTRUCTIONS

⚠ WARNING: Read all instructions before using this machine.

To ensure your safety, read the following precautions before using this product

1. Please read, study and understand the instructions and all warning labels before use.
   (It is recommended to be familiar with the normal operation and use methods of the device before using this product. Information is available on this manual and at local retailers).

2. Please keep this manual and ensure that all the warning labels are clear and complete.

3. This product is recommended to install by more than two people.

4. Please consult your doctor's advice before starting the exercise.

5. Please ensure safety when the children are present.

6. Be careful when using it with children present.

7. Please check any signs of wear of the wire rope regularly. If there is wear, it may cause some danger to you.

8. Please keep your hands, limbs and clothes stretch to use the device.

9. Please note any signs of machinery that may occur, including part wear, loose hardware, and welding cracks. Stop using the device with the above signs immediately and contact the after-sales service department of our company.

10. You can complete the assembly with a wrench, or an inner hexagon wrench.

11. The user weight of this product shall not exceed 100kg.

12. The product is subject to change without notice and the final interpretation belongs to the Division.

II. CARE INSTRUCTIONS

- Lubricate moving joints with silicon spray after periods of usage.
- Be careful not to damage plastic or metal parts of the machine with heavy or sharp objects.
- The machine can be kept clean by wiping it down using dry cloth.
- Check and adjust the tension of wire rope on a regular basis.
- Regularly check all moving parts and make sure there are signs of wear and damage, if any the use of the device must be stopped immediately and contact our after-sales department.
- During inspection, it is necessary to make sure that all bolts and nuts are completely fixed. If any bolt or nut connection is loosened, please re-tighten.
- Check weld for cracks.
- Failure to perform daily maintenance may result in personal injury or equipment damage.

III. PARTS LIST

1. Base (Left & Right)

2pcs

2. Rear Cross Base

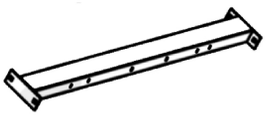

3. Rear Beam

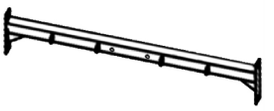

4. Back Upright (Left)

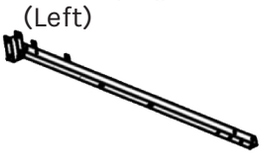

5. Back Upright (Right)

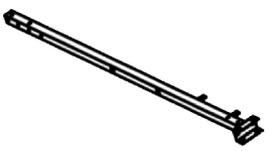

6. Side Middle Beam (Left & Right)

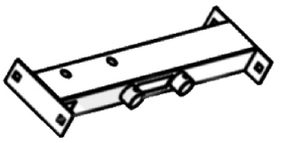

2pcs

7. Middle Upright (Left)

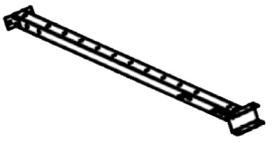

8. Middle Upright (Left)

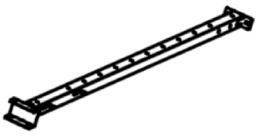

9. Front Stainless Upright

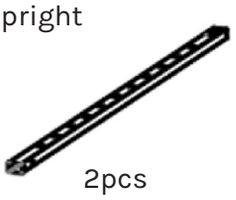

2pcs

10. Silver Peg

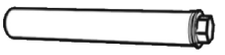

20pcs

11. Side Top Beam (Left & Right)

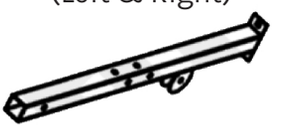

2pcs

12. Front Top Beam

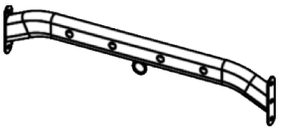

13. V-Shelf

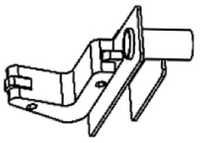

2pcs

15. Barbell Storage

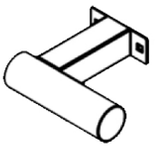

16. Weight Stack Rod

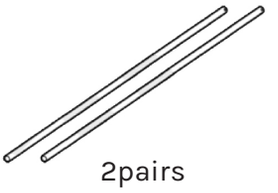

2pairs

17. Bottom Steel Board

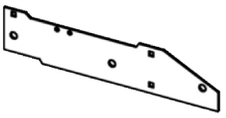

4pcs

18. Upper Steel Board

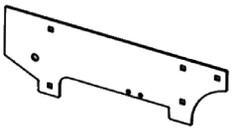

4pcs

19. Plate Holder Inner Sleeve

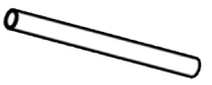

4pcs

20. Weight Stack Pulley Wheel

2pcs

21. Weight Stack Adjustable Rod

2pcs

22. Iron Plate (Hole Spacing 90mm)

7pcs

23. Iron Plate (Hole Spacing 110mm)

4pcs

24. Iron Plate (Hole Spacing 160mm)

2pcs

25. Weight Stack Shield

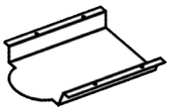

2pcs

26. Smith Bar

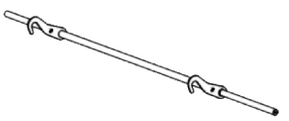

27. Smith Slider

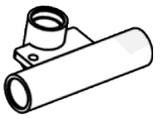

2pcs

28.Smith Catch (Left)

29. Smith Catch (Right)

30. Pulley Slider

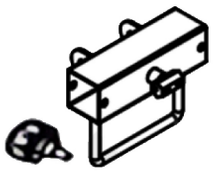

2pcs

31. Pulley Swivel

2pcs

32. Hard Pull Handle

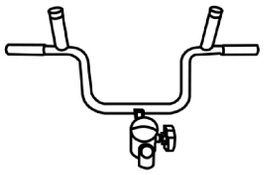

33. Foot board

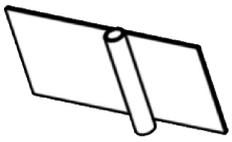

2pcs

34. Foot board Shaft

35. Chin Up Bar (Left)

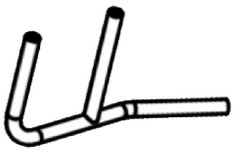

36. Chin Up Bar (Right)

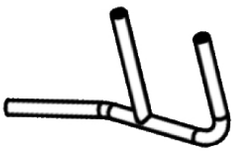

37. Safety Catch (Left)

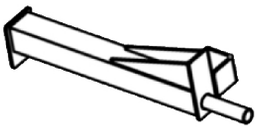

38. Safety Catch (Right)

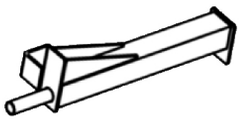

39. Smith Bar Sleeve

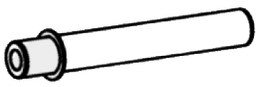

2pcs

40. Landmine Seat

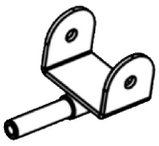

41. Straight Bar

42. Top Weight Stack

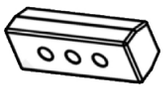

2pcs

43. Weight Stack

24pcs

44. Plastic Sleeve

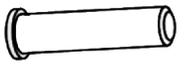

4pcs

45. Landmine Barbell Holder

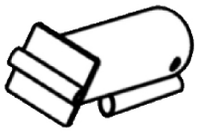

46. Plate Collar

8pcs

47. Shock Pad

6pcs

48. Rubber Gasket (Big)

12pcs

49. Rubber Gasket (Small)

8pcs

50.

External Diameter 28mm - 2 qty.

51. Dip Bar (Left)

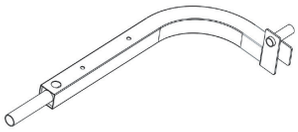

52. Dip Bar (Right)

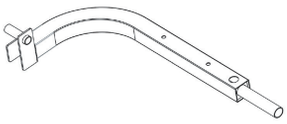

53. Wire Cable - 7790mm

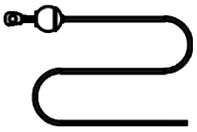

2pcs

54. Pulley Wheel (Large)

55. Pulley Wheel (Small)

56. Lat Bar

57. Weight Stack Pin

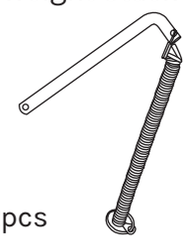

2pcs

58. Chain

3pcs

59. Carabiner

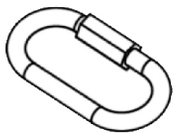

8pcs

60. Landmine Knob

2pcs

61. D-Handle

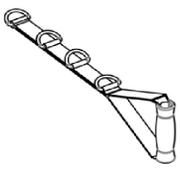

2pcs

Leg Holder

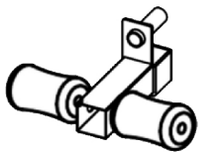

62. Small Handles

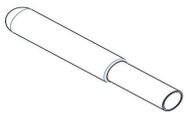

2pcs

63. Lower connecting frame

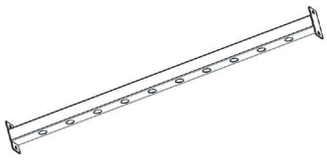

2pcs

70. M10 x 95mm Bolt

4pcs

71. M10 x 90mm Bolt

5pcs

73. M10 x 75mm Bolt

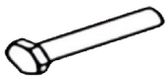

10pcs

60. M10 x 70mm Bolt

46pcs

77. M10 x 45mm Bolt

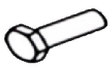

8pcs

78. M8 x 16mm Bolt

8pcs

79. M10 x 20mm Bolt

13pcs

80. M10 x 110mm Bolt

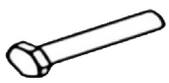

2pcs

81. M8 x 80mm Bolt

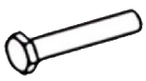

8pcs

82. M8 x 65mm Bolt

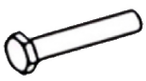

4pcs

83. M10 Nut

75pcs

84. M8 Nut

16pcs

85. Ø10 Washer

185pcs

86. Ø8 Washer

90. Smith Rod

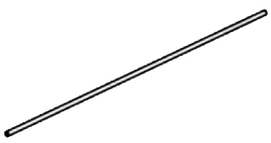

91. Smith Rod Seat

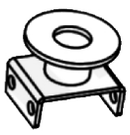

92. Smith Rod Upper Cover

97. Thread fins

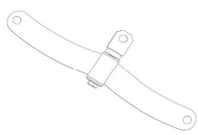

93. Leg Press Device

94. Tricep rope

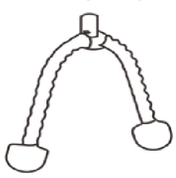

95. Curved Pull Handle

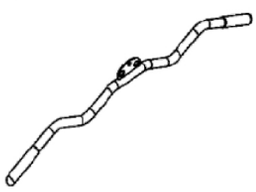

96. Parallel bars elbow pads

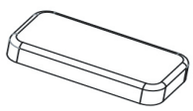

2pcs

IV. ASSEMBLY INSTRUCTIONS

⚠ ATTENTION:

1. The gasket shall be placed at both ends of the bolts (against the bolt head and nuts), unless otherwise stated.
2. Some spare parts have been pre-assembled.
3. It is strongly recommended this machine to be assembled by two or more people to avoid possible injury.
4. Fully tighten the bolt on the machine at the end when assembly is completed.

Do not tighten all bolts until all installations are complete.

70 M10 X 95	74 M10 X 70	85 Φ10	83 M10
4 pcs	4 pcs	16 pcs	8 pcs

Note: Some hardware are Pre-installed, refer to installation diagram.

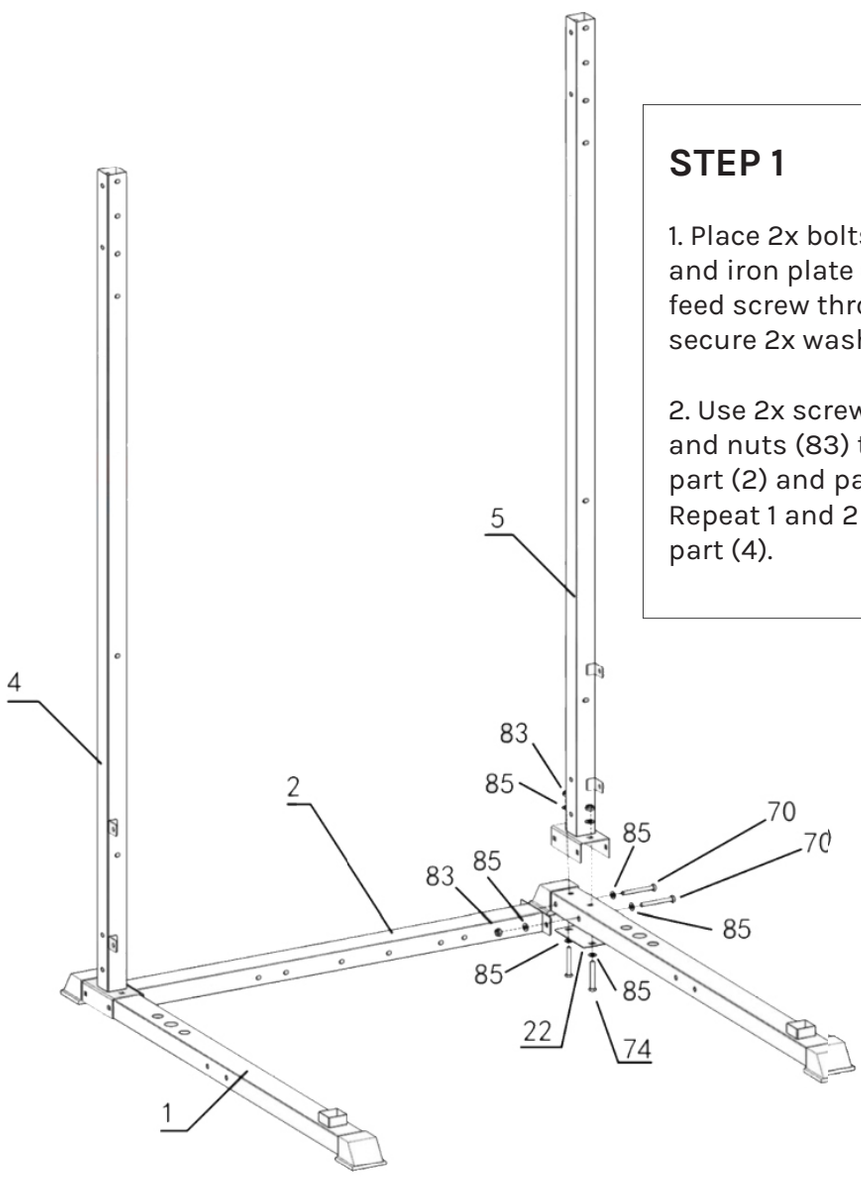

STEP 1

1. Place 2x bolts (74), 2x washers (85) and iron plate (22) under part (1) and feed screw through to part (5) then secure 2x washers (85) and nuts (83).

2. Use 2x screws (70), 4x washers (85) and nuts (83) to connect parts (1), part (2) and part (5) together.
Repeat 1 and 2 for the other side for part (4).

Do not tighten all bolts until all installations are complete.

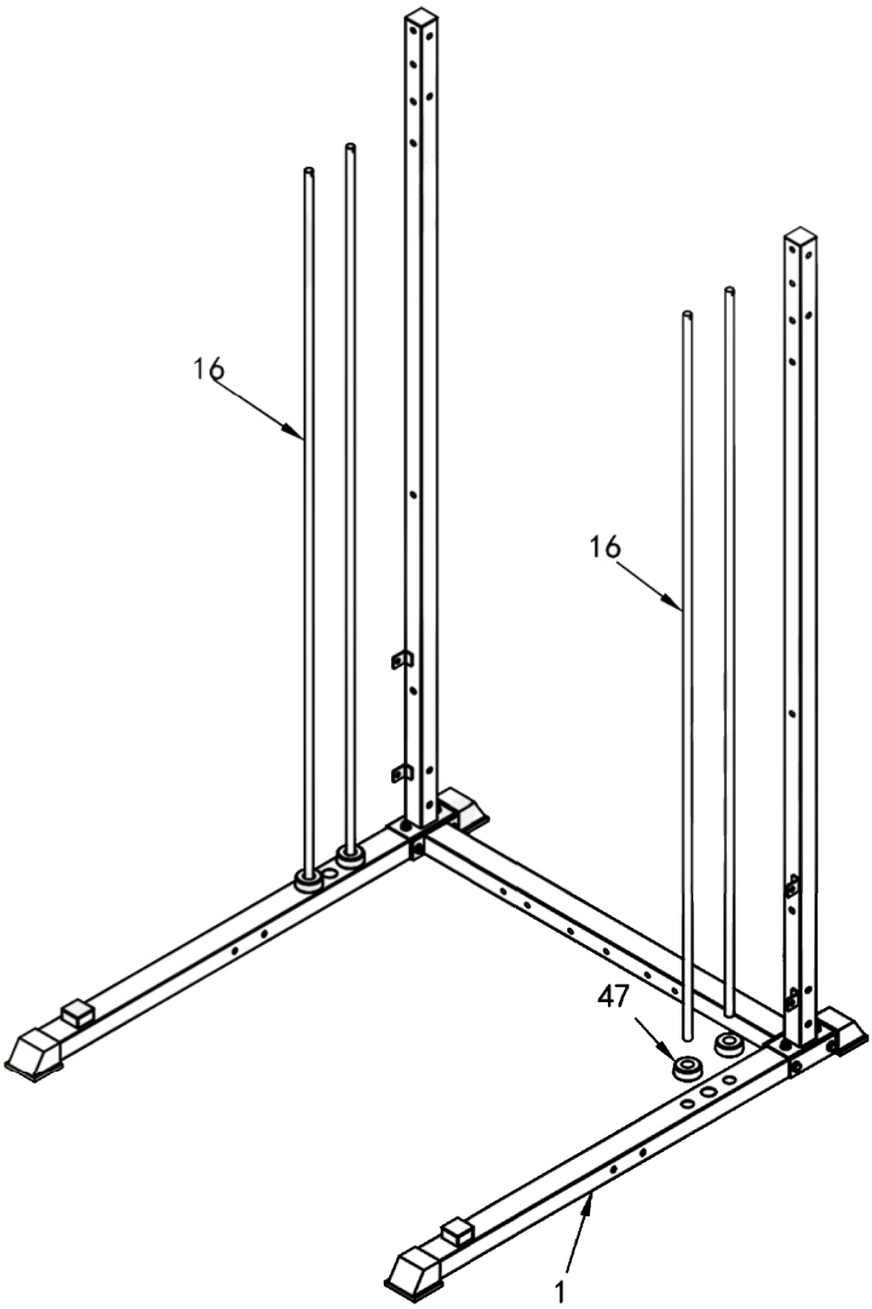

STEP 2

1. Add 4x shock pads (47) and 4x weight stack rods (16) to part (1) as pictured.

Do not tighten all bolts until all installations are complete.

71 M10 X 90	85 Φ10	83 M10
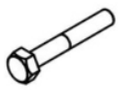		
4 pcs	8 pcs	4 pcs

Note: Some hardware are Pre-installed, refer to installation diagram.

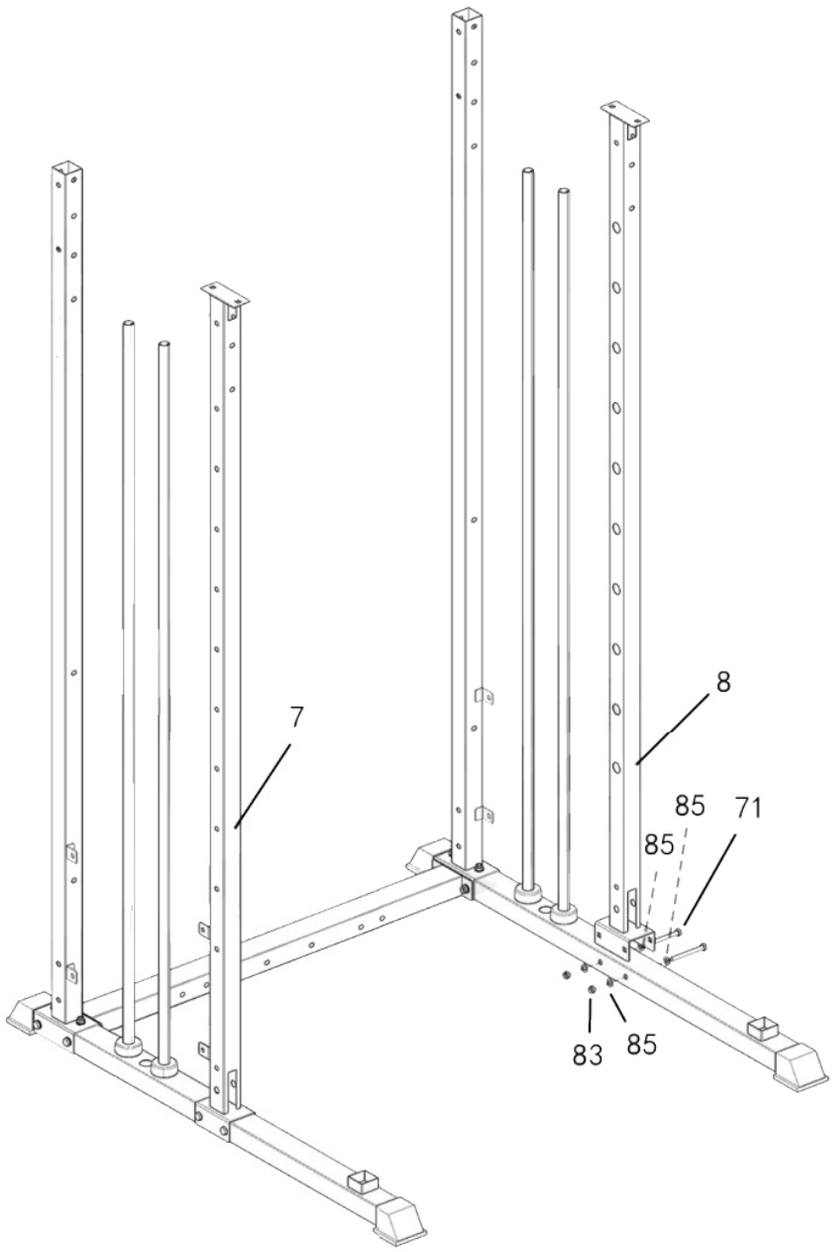

STEP 3

Note: the 2x bolt hole part sticking out of parts (7) and (8) should face the weight stack rod. It will be used to install the weight covers at a later step.

1. Secure part (8) to part (1) using 2x bolts (71), 4x washers (85) and 2x nuts (83) as pictured. Repeat for part (7).

Do not tighten all bolts until all installations are complete.

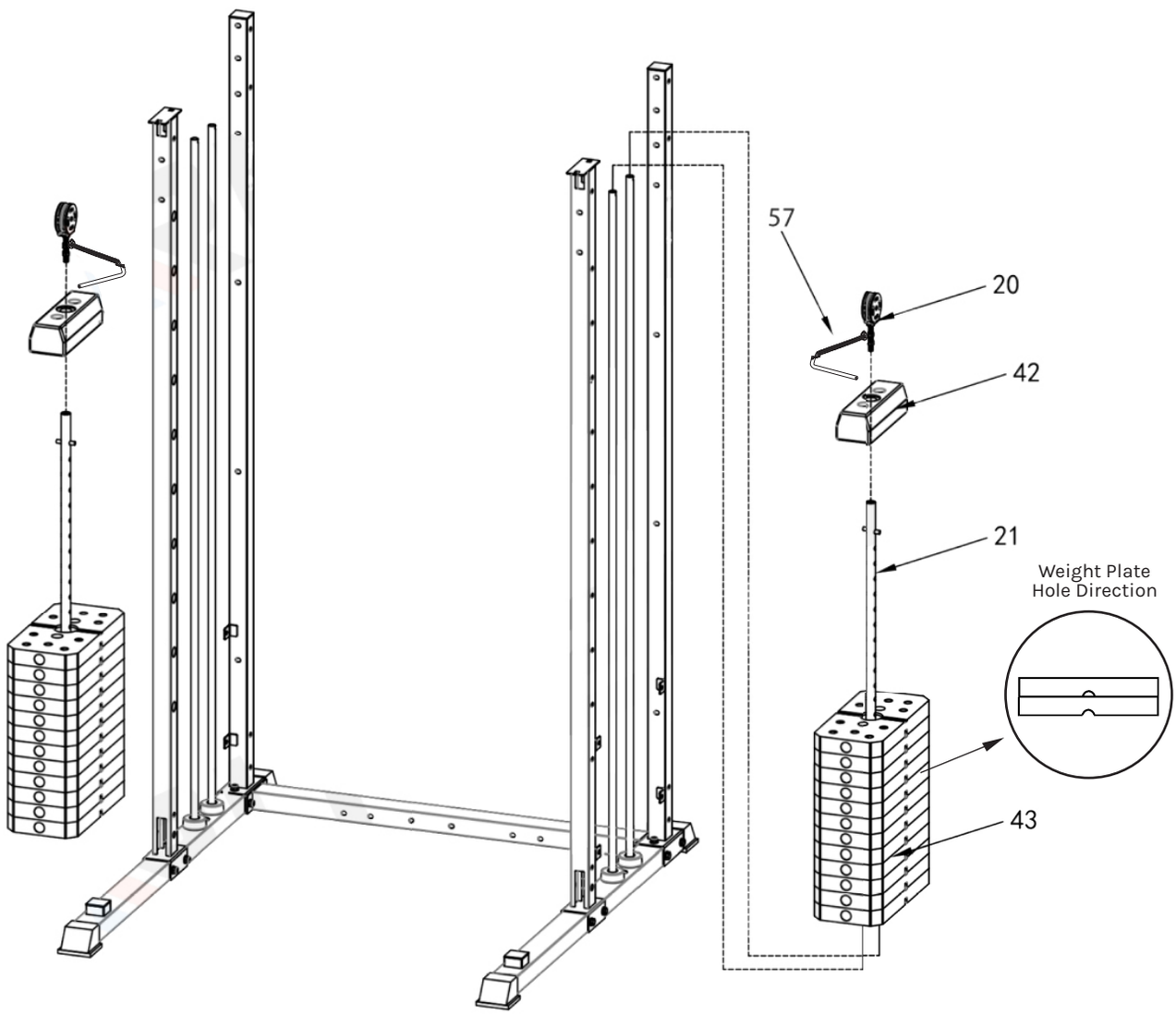

STEP 4

1. Place the 12x weight stacks (43) and the small weight stack (42) into the weight rods (16).

Important: The concave hole on the weight stacks MUST be at the bottom facing downwards. See the image for Weight Plate Hole Direction.

2. Place weight selector rod (21) in the middle of the weight stacks as pictured and secure weight stack pulley wheel (20) to the rod (21).

3. Attach weight stack pin (57) to part (20). Use the pin to slot into the weight stacks and choose the weight limit for your exercise.

Do not tighten all bolts until all installations are complete.

74 M10 X 70	85 Φ10	83 M10
8pcs	16pcs	8pcs

Note: Some hardware are Pre-installed, refer to installation diagram.

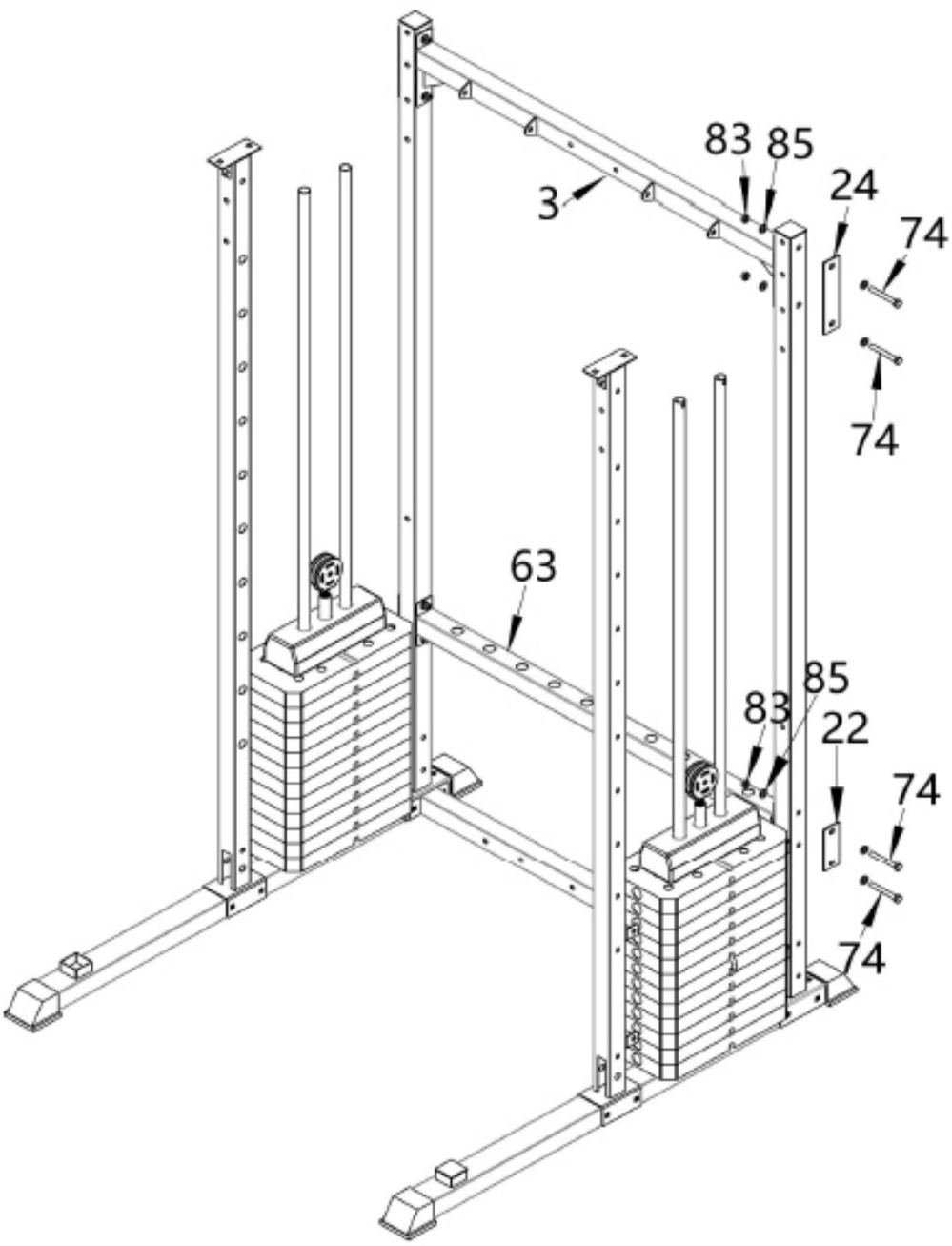

STEP 5

1. Use 2x bolts (74), 4x washers (85) and 2x nuts (83) to secure iron plate (24) to part (5) and part (3). Repeat step for the other side for part (4).

2.Place (63#) on both sides of (5#),tighten it with (74#) (22#) (85#) and (83#).

Do not tighten all bolts until all installations are complete.

74 M10 X 70	79 M10 X 20	83 M10	85 Φ10
2 pcs	4 pcs	2 pcs	8 pcs

Note: Some hardware are Pre-installed, refer to installation diagram.

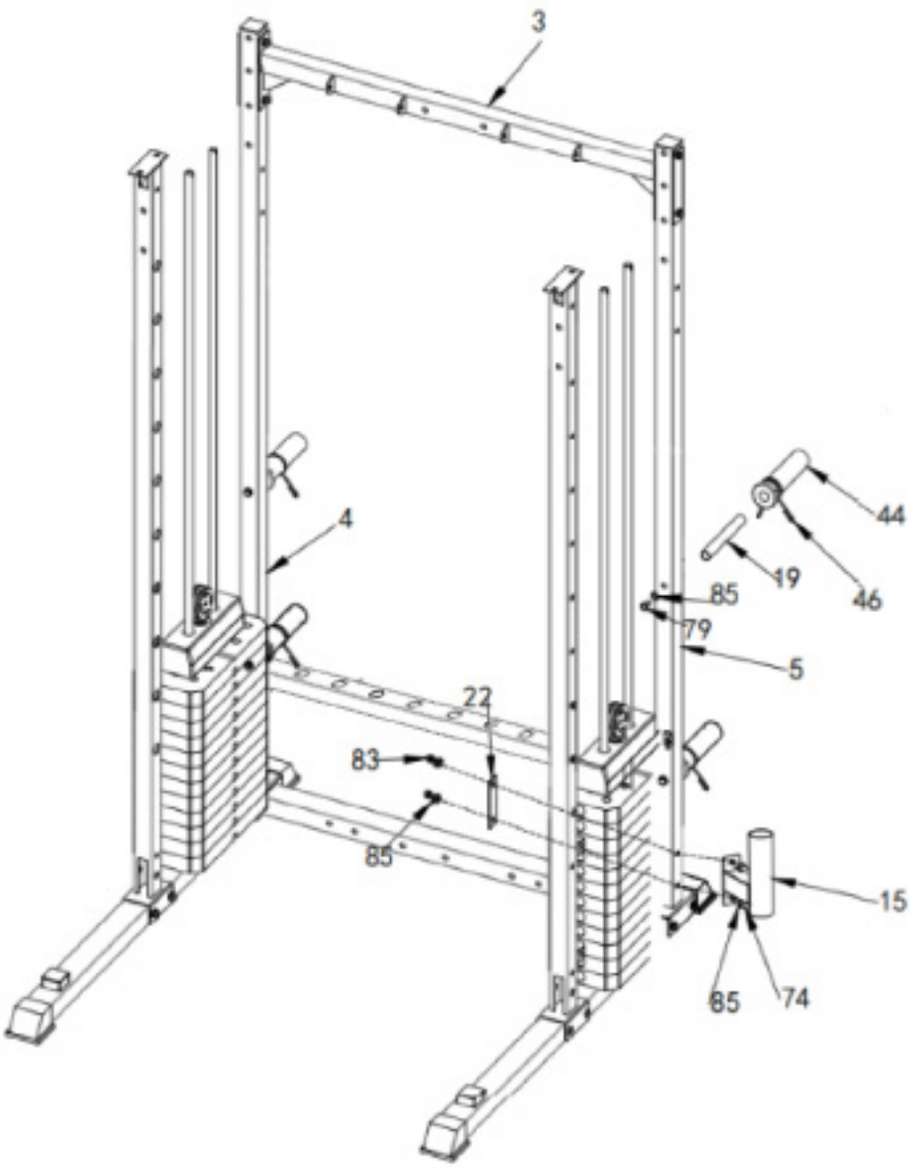

STEP 6

Attaching the weight storage posts:
1. Use 1x bolt (79) and 1x washer (85) to secure sleeve (19) to the hole opening on part (5) post. Repeat for the other hole opening and on the other side for part (4).
2. Add 4x Olympic sleeves (44) onto the installed holders and you can store the Olympic collars (46) onto the sleeve.

Attaching the Olympic barbell holder:
1. Secure the barbell holder (15) to the side of the post (5) using iron plate (22), 2x bolts (74), 4x washers (85) and 2x nuts (83).

Do not tighten all bolts until all installations are complete.

74 M10 X 70	83 M10	85 Φ10
8 pcs	8 pcs	16 pcs

Note: Some hardware are Pre-installed, refer to installation diagram.

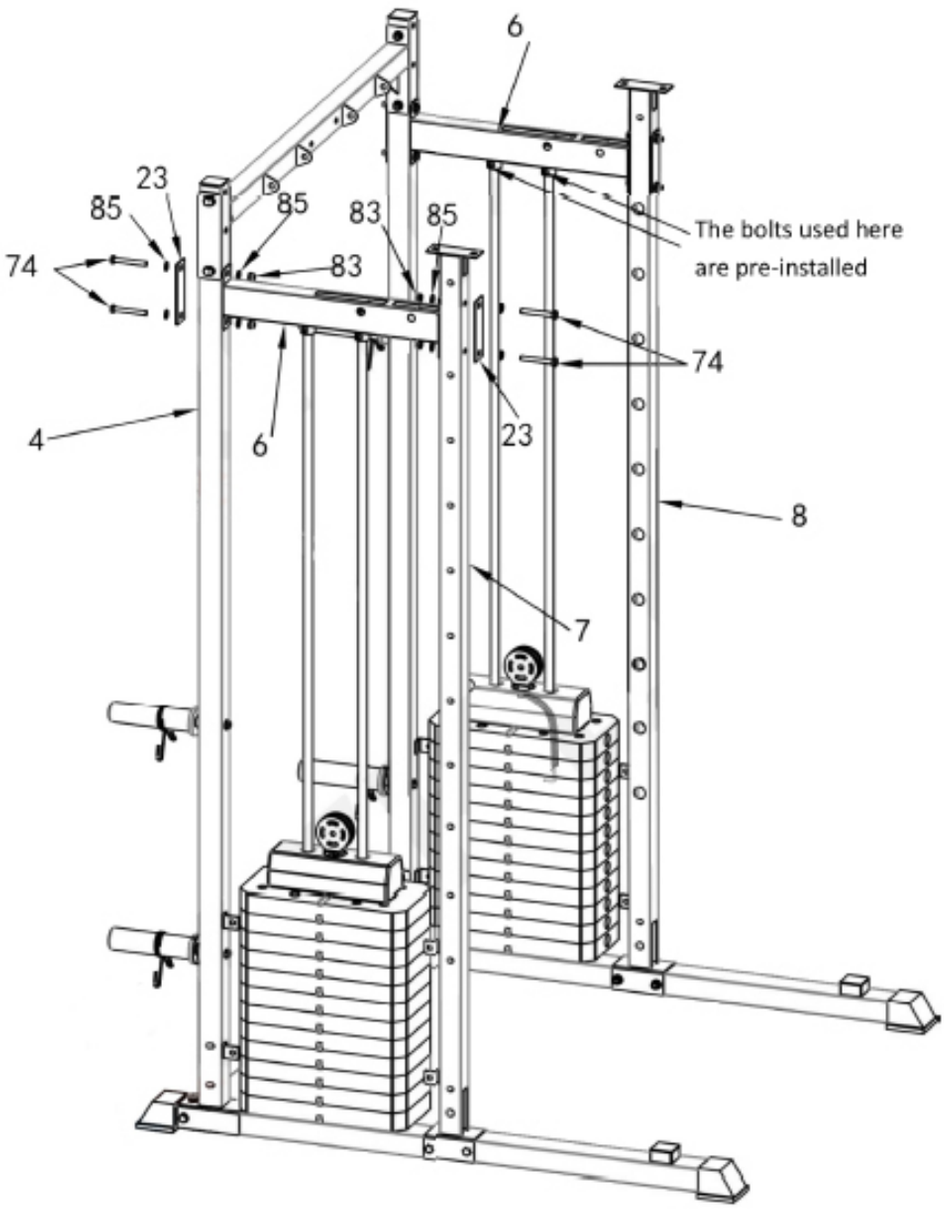

STEP 7

1. Align part (6) to the weight stack rods so that the rods slot into part (6) and secure with the pre-installed bolt on part (6).

2. Next, connect part (6) to part (4) and (7) using 2x iron plates (23), 4x bolts (74), 8x washers (85) and 4x nuts (83) as pictured.

3. Repeat for the other side.

Do not tighten all bolts until all installations are complete.

74 M10 X 70	83 M10	85 Φ10
8 pcs	8 pcs	16 pcs

Note: Some hardware are Pre-installed, refer to installation diagram.

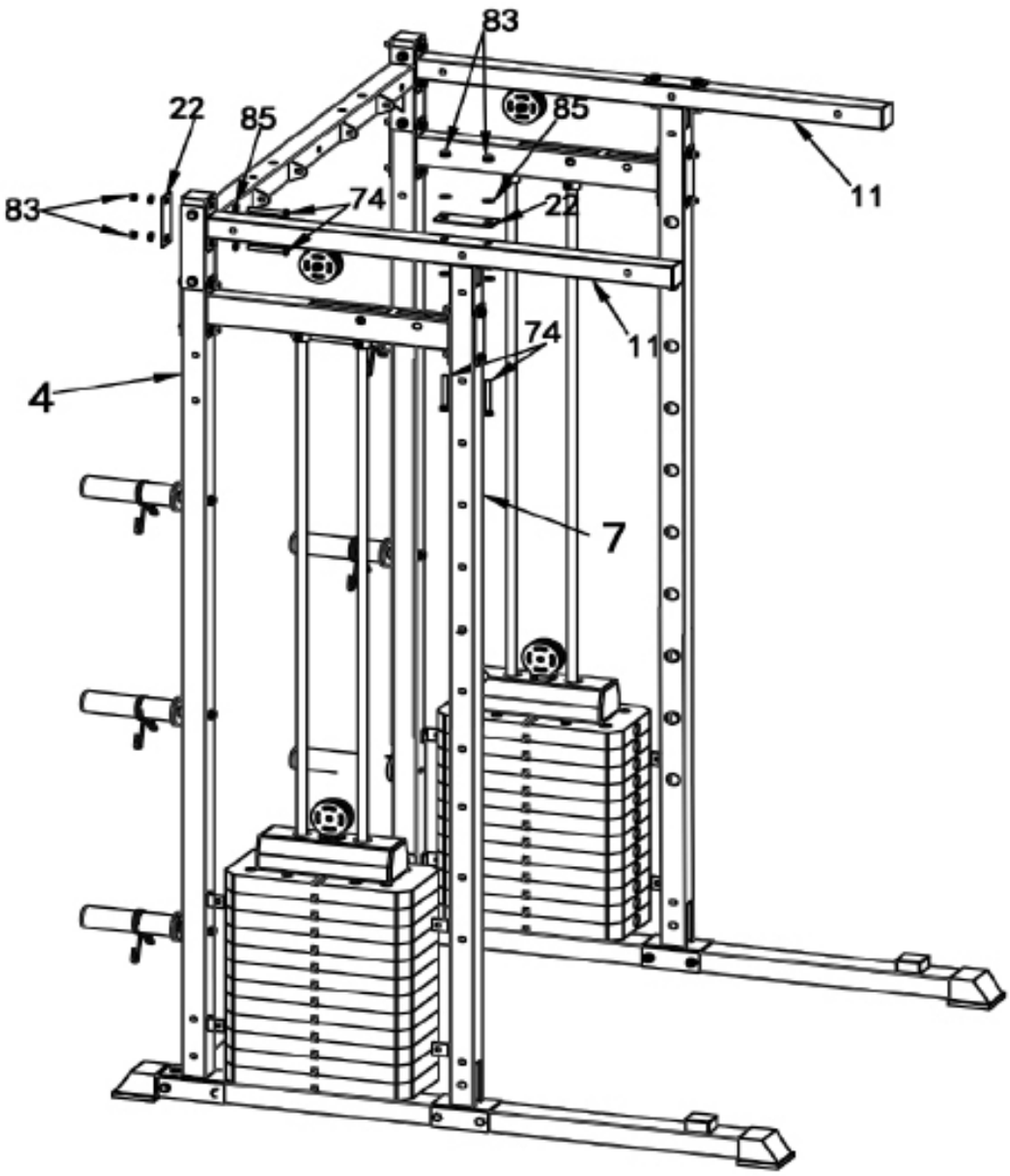

STEP 8

1. Secure the 2x top beams (11) to the back posts (4 & 5) using 4x bolts (74), 8x washers (85), 2x connecting plates (22) and 4x nuts (83).
2. Secure the part (11) at the front post (7 & 8) using 4x bolts (74), 8x washers (85) and 4x nuts (83).

Do not tighten all bolts until all installations are complete.

74 M10 X 70	79 M10 X 20	85 Φ10	83 M10
8 pcs	20 pcs	36 pcs	8 pcs

Note: Some hardware are Pre-installed, refer to installation diagram.

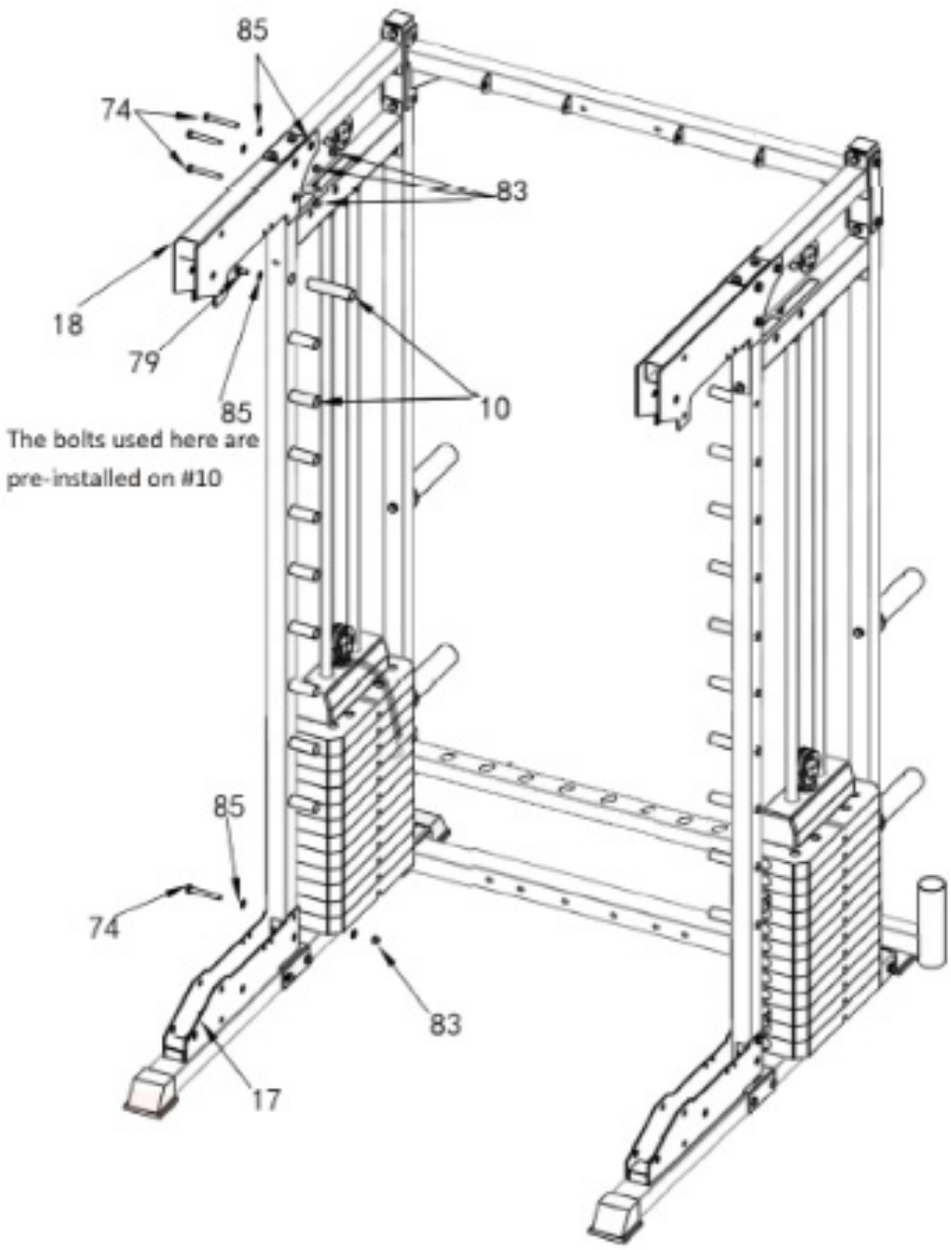

STEP 9

1. Attach the pegs (10) to parts (7) and (8) using the pre-installed bolts on part (10).
2. Attach the top covers (18) to part (11) using 3x bolts (74), 6x washers (85) and 3x bolts (83). Repeat for other side.

Do not tighten all bolts until all installations are complete.

79 M10 X 20	85 Φ10
2 pcs	2 pcs

Note: Some hardware are Pre-installed, refer to installation diagram.

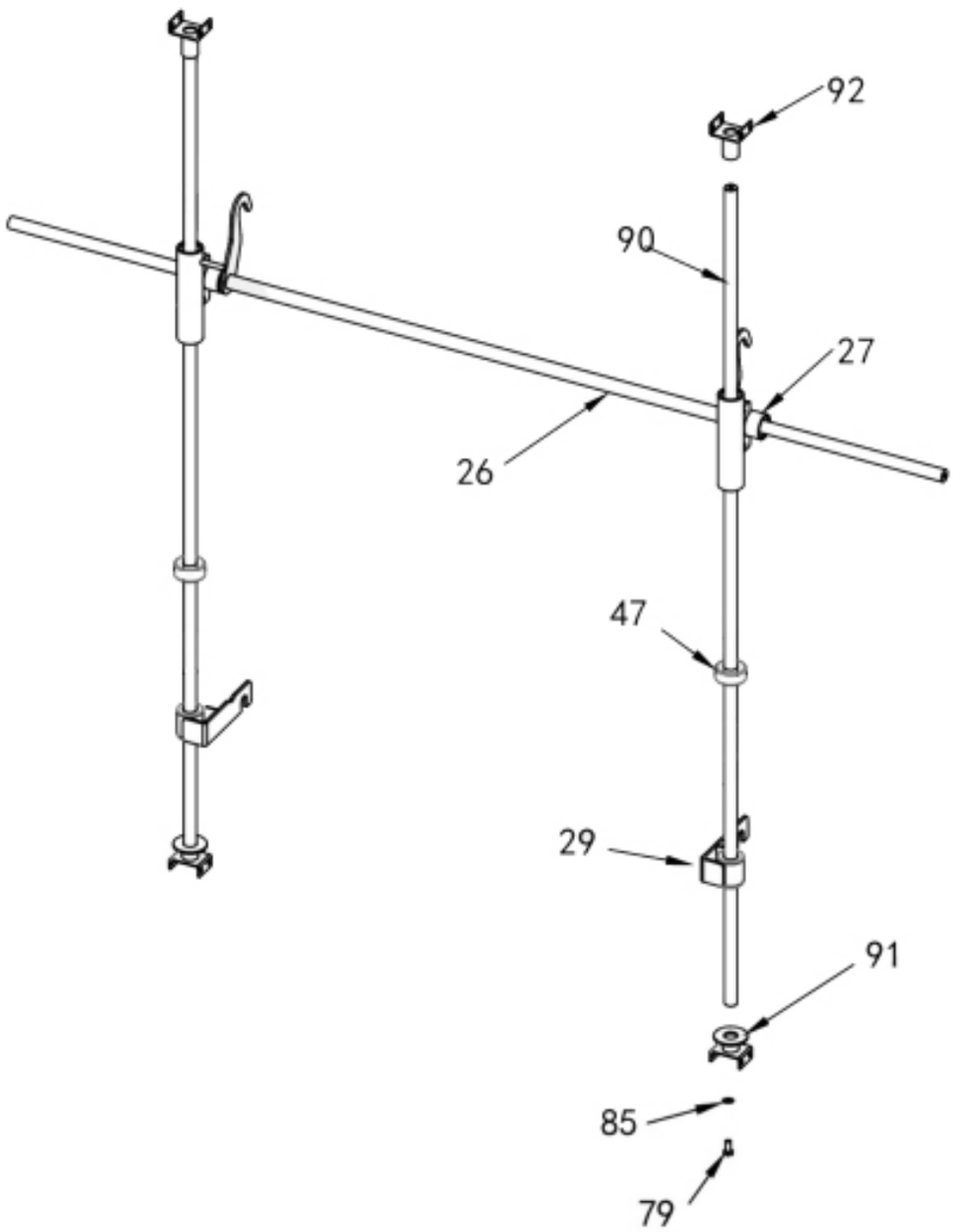

STEP 10

1. Attach part (91) to (90) using 1x bolt (79) and 1x washer (85). Repeat for the other side.
2. Place in order part (29), (47), (27) and slot (92) at the top of part (90) as pictured. Repeat for other side.
3. Slide rod (26) into both part (27).

Do not tighten all bolts until all installations are complete.

81 M8 X 80	86 Φ8	84 M8
8 pcs	16 pcs	8 pcs

Note: Some hardware are Pre-installed, refer to installation diagram.

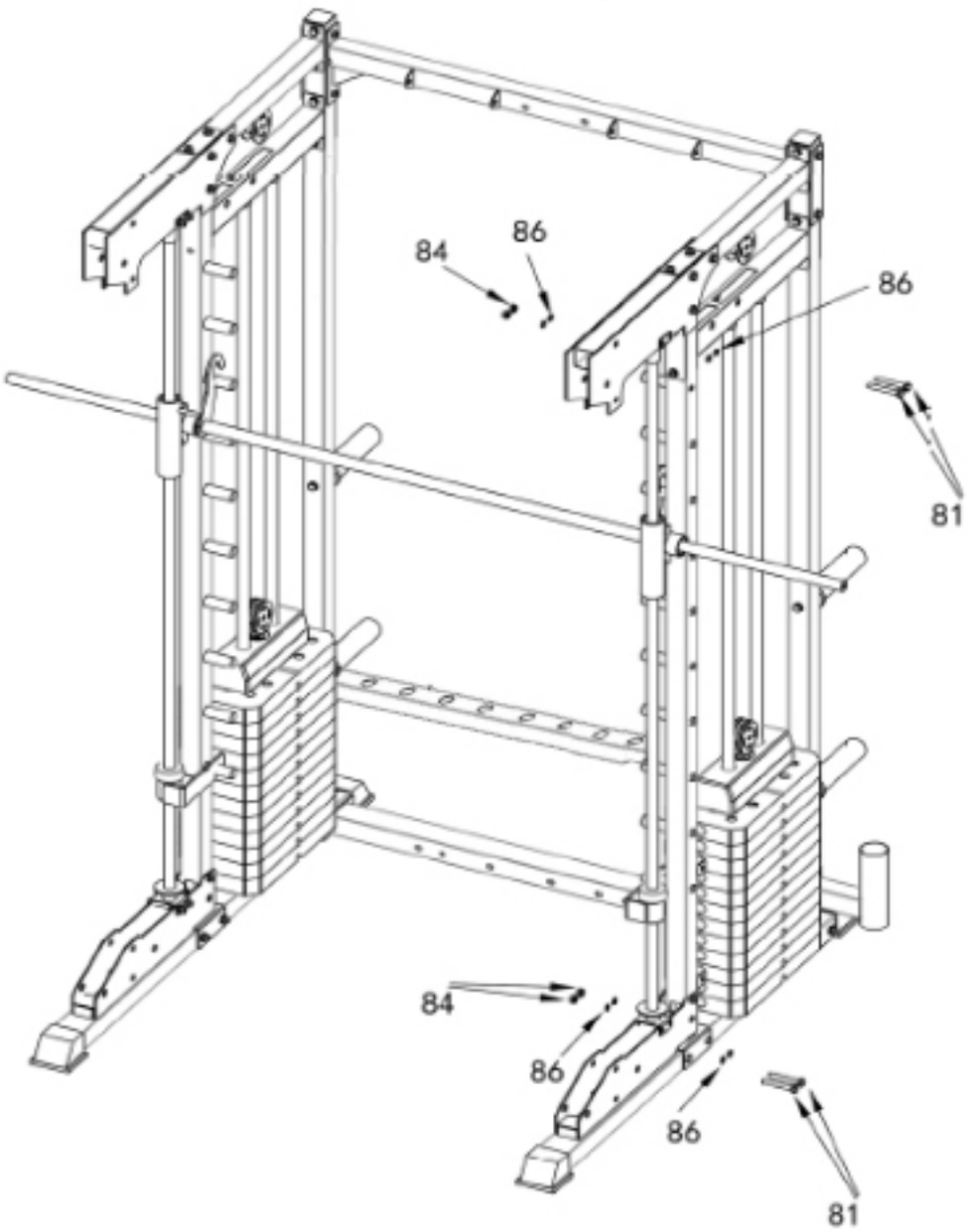

STEP 11

1. Place the assembled smith bar to the frame as pictured and secure to the top and bottom covers using 8x bolts (81), 16x bolts (86) and 8x bolts (84).

Do not tighten all bolts until all installations are complete.

74 M10 X 70	85 Φ10	83 M10
4 pcs	8 pcs	4 pcs

Note: Some hardware are Pre-installed, refer to installation diagram.

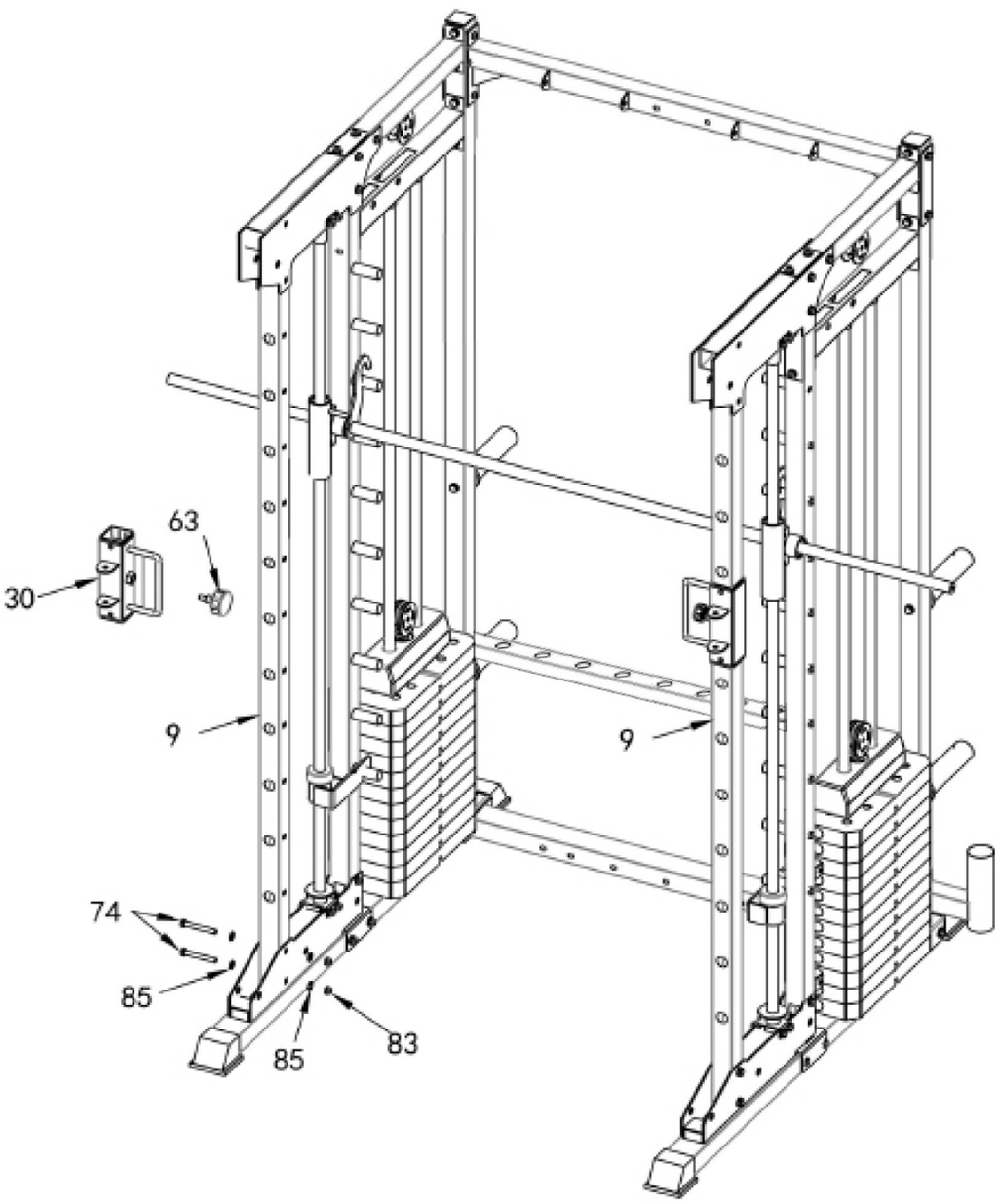

STEP 12

1. Place the 2x pulley slider (30) (one each) on the 2x part (9) and locking them with the lock pins (63, pre-installed on part 30), as pictured.

2. Align the 2x parts (9) to the hole openings on the bottom covers of the frame and secure with 4x bolts (74), 8x washers (85) and 4x nuts (83).

Do not tighten all bolts until all installations are complete.

73 M10 X 75	79 M10 X 20	80 M10 X 110	83 M10	85 Φ10
4 pcs	4 pcs	2 pcs	6 pcs	16 pcs

Note: Some hardware are Pre-installed, refer to installation diagram.

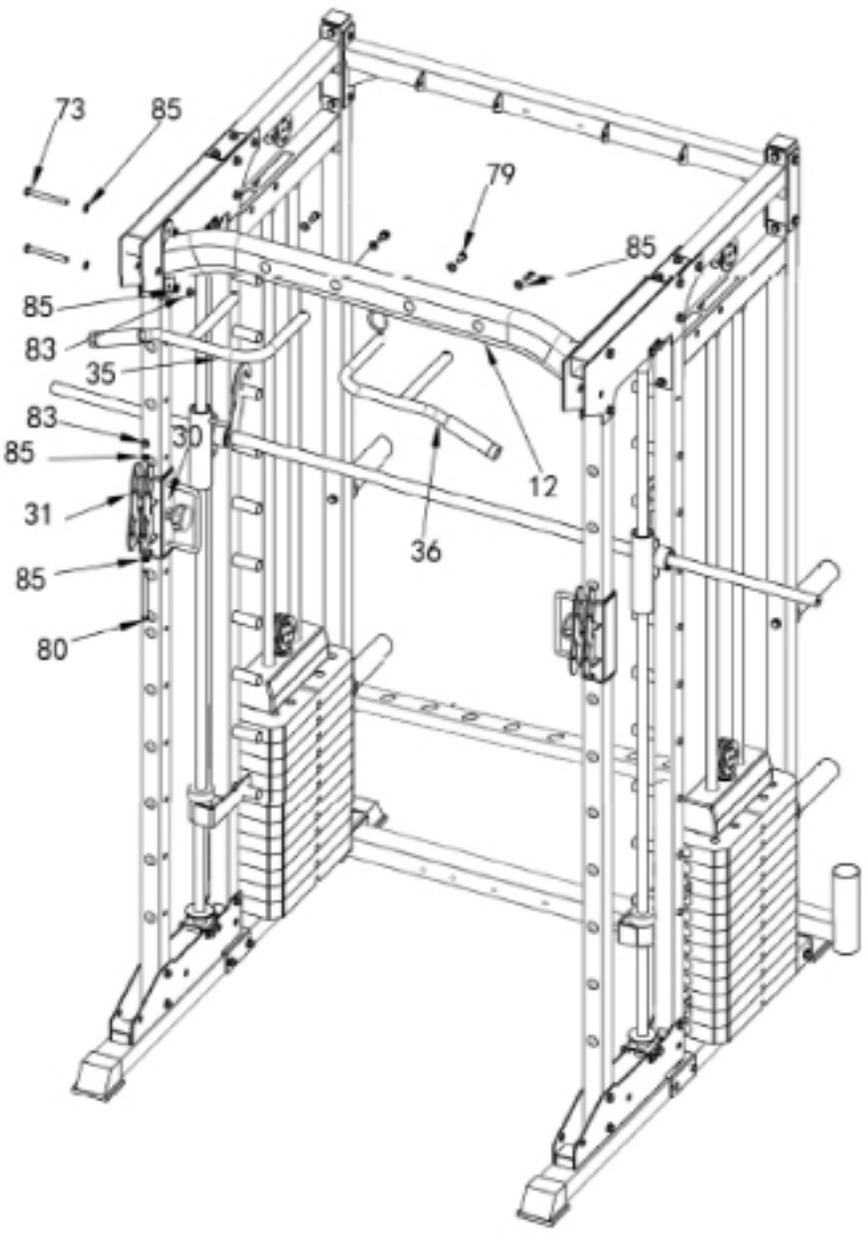

STEP 13

1. Use 4x bolts (73), 8x washer (85) and 4x nuts (83) to secure the 2x parts (9) to the top covers and to part (12).
2. Attach chin up handles (35) and (36) to part (12) using 4x bolts (79) and 4x washers (85).
3. Attach the pulley swivel (31) to the pulley slider (30) using 1x bolt (80), 2x washers (85) and 1x nut (83), repeat for the other side.

Do not tighten all bolts until all installations are complete.

73 M10 X 75	74 M10 X 70	77 M10 X 45	85 Φ10	83 M10
6 pcs	4 pcs	8 pcs	36 pcs	18 pcs

NOTE: Some hardware are Pre-installed, refer to installation diagram. Washers must go on both sides. After the bolt and before the nut.

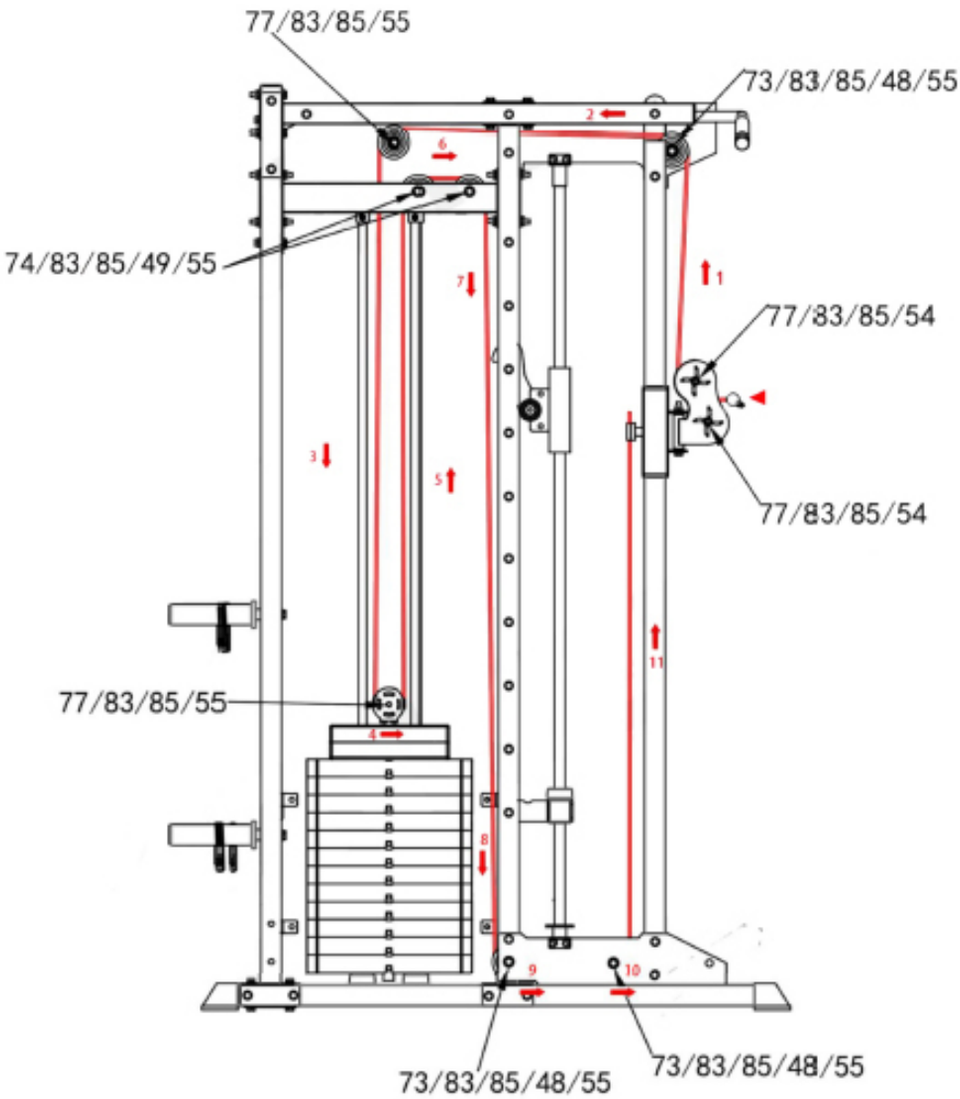

STEP 14

Follow the arrow for the direction of the cables and install with the parts numbers mentioned in the diagrams.

Important:

- Be sure to install the wire rope before installing the pulley.
- Avoid over-tightening or under-tightening the bolts for the pulleys, as this can disrupt the smooth operation of the cable and potentially damage it if it comes off the track due to being too loose.
- Washers must go on both sides, after the bolt and before the nut.
- Parts 48 and 49 (if applicable) must go on either sides of the pulley.

Order of the bolt should be Bolt, Washer, Part 48 or 49 (if applicable), Pulley, Washer and Nut.

Do not tighten all bolts until all installations are complete.

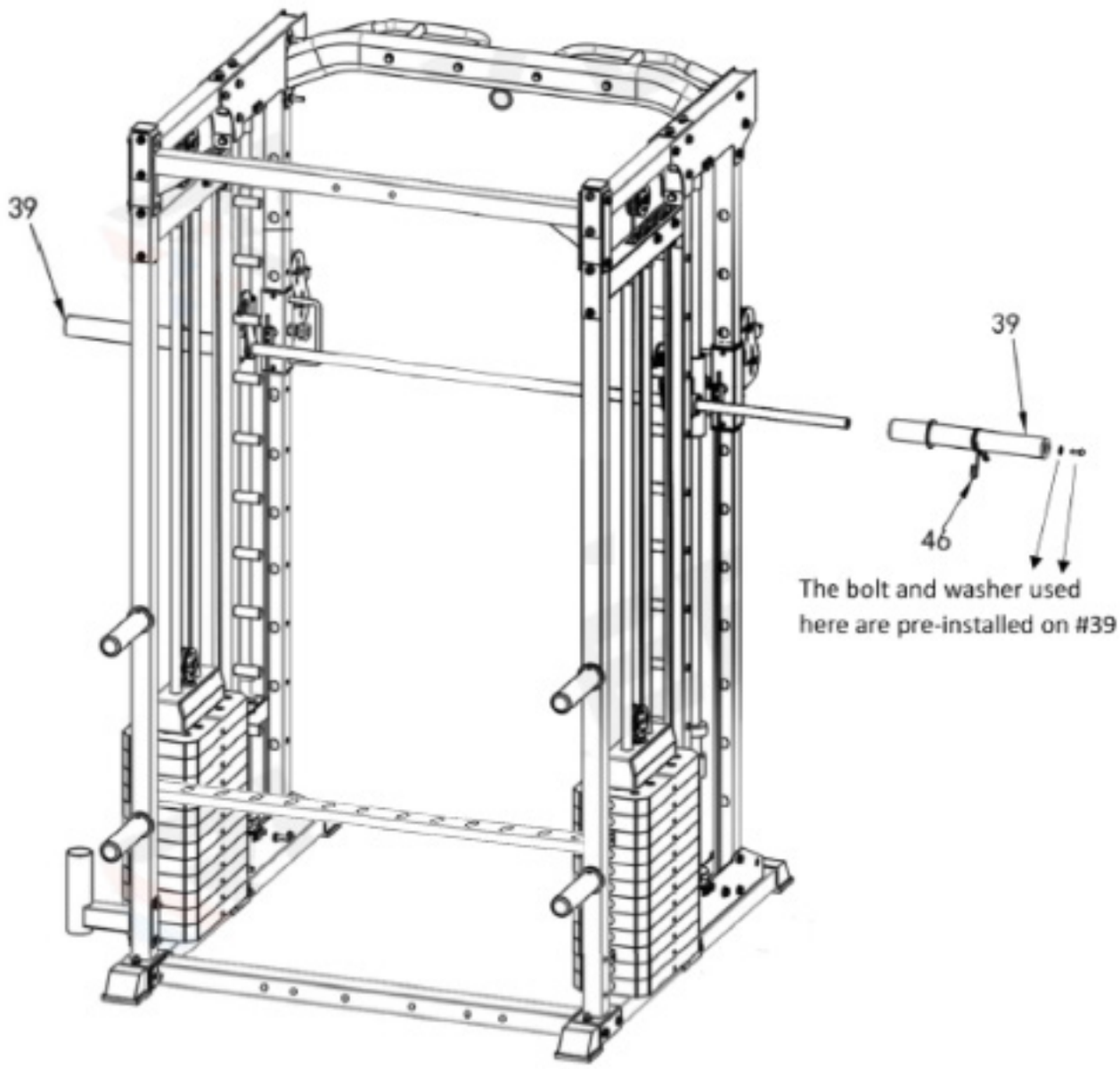

STEP 15

1. Attach Olympic sleeves (39) to the installed smith bar and secure with bolt and washer (pre-installed on part 39). Place the olympic collars (46) to sleeve when in use with weight plates or just for storage..

Do not tighten all bolts until all installations are complete.

71 M10 X 90	79 M10 X 20	77 M8 X 16	85 Φ10	83 M10
1 pc	3 pcs	8 pcs	5 pcs	1 pc

Note: Some hardware are Pre-installed, refer to installation diagram.

86 Φ8	84 M8
16 pcs	8 pcs

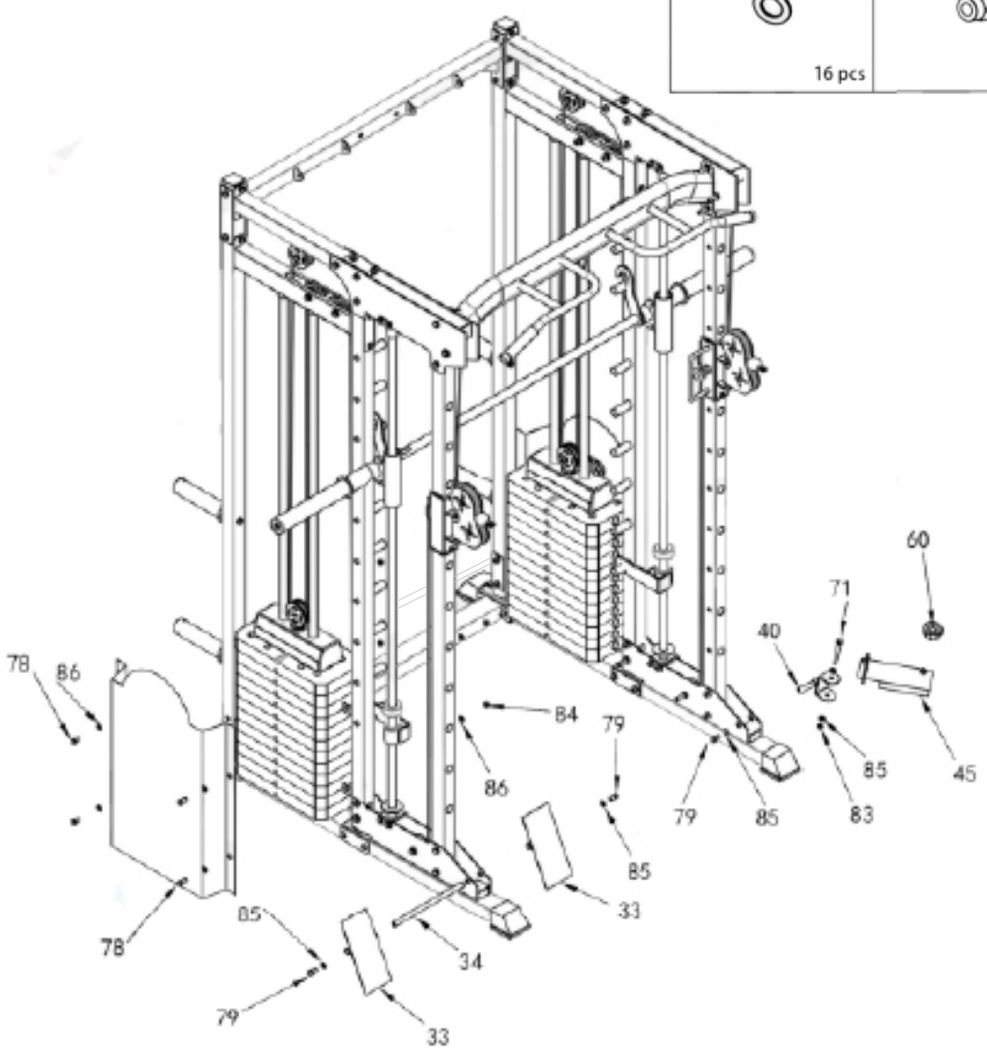

STEP 16

1. Attach the 2x weight stack covers (25) to the side of the weight stacks (R/L side) and secure using 4x bolts (78) and 4x washers (86) on each side.
Note: Foot plate and landmine post and can be swapped for installation, it does not need to follow diagram.
Attaching footplate:
1. Place rod (34) into the hole opening of bottom covers (17) then place on each end of the rod, the foot plate (33) as pictured. Secure using 2x bolts (79) and 2x washers (85).

Attaching the landmine post:

1. Align the bolt openings for landmine barbell holder (45) to landmine seat (40) and secure using 1x bolt (70), 1x washer

(85) and 1x nut (83).

2. Install the landmine seat (40) to the bottom covers

J-Hooks and Safety Bar
When using a separate barbell, slot the j-hooks and Safety bar to your preferred height on the holes of the front posts.

Cable Attachments
Attach the carabiner clips to the cables and then attach the bar you wish to use to the clip. Ensure to fully tighten the clip when changing your bars.
You can use the chain if you need a longer range of motion.

Dip Handle Attachment
When you wish to use the dip handles, slot them into the front column hole where the j-hooks and safety bar slots into.

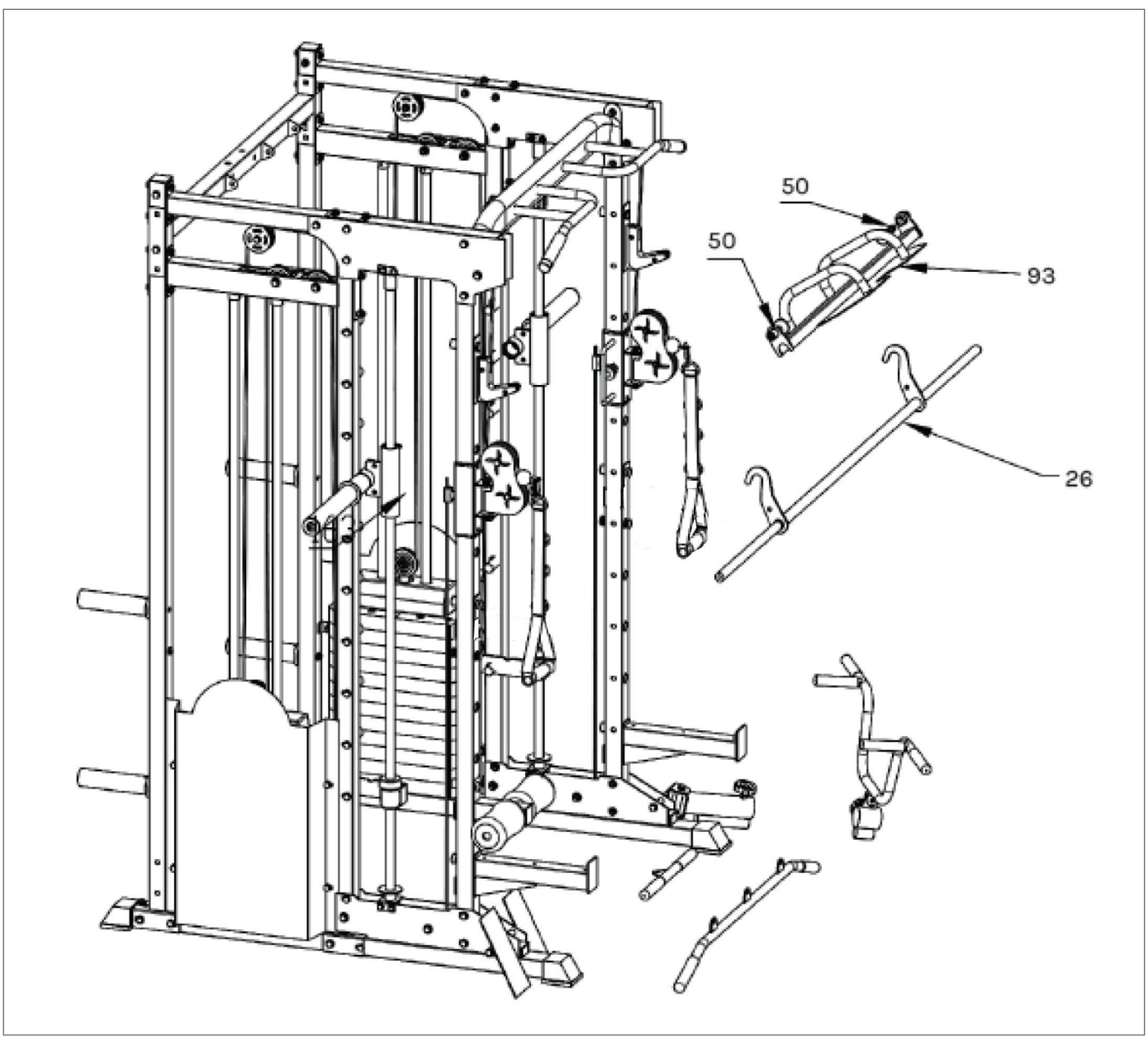

Leg Press Attachment Assembly

1. Install (# 93) at the position shown in (# 26) smith bar and secure it with (# 50) Spring pull pin.

DIP HANDLE INSTALLATION

Attach the parallel bars elbow pads to the dip bar (left and right) using M8*65mm bolts.

Dip handles can then be hooked onto the front columns to use.

51. Dip Bar (Left)

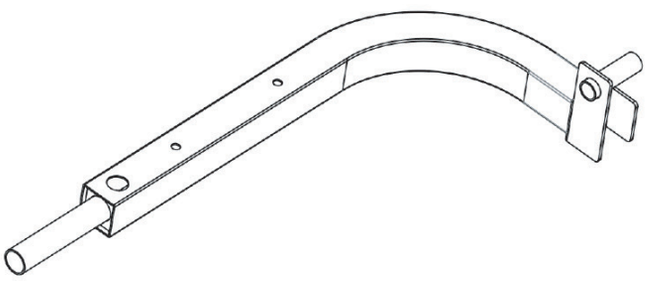

52. Dip Bar (Right)

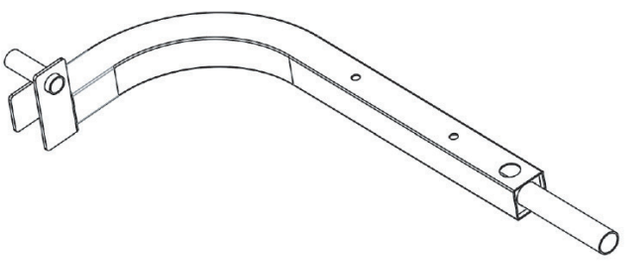

96. Parallel bars elbow pads

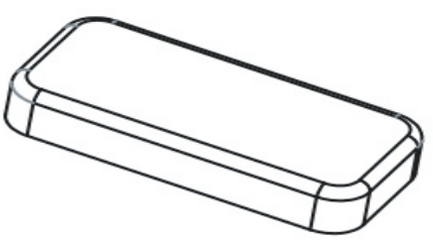

2pcs

OPTIONAL ATTACHMENT

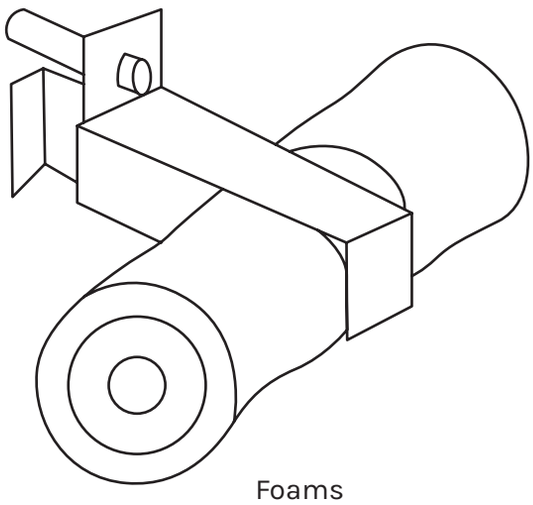

Foams

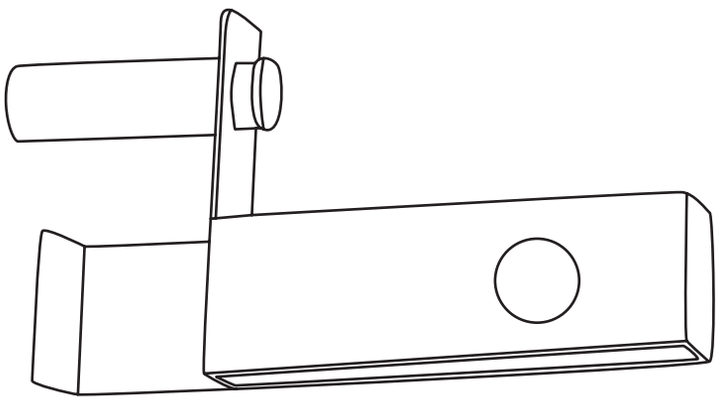

Foam Attachment Bracket

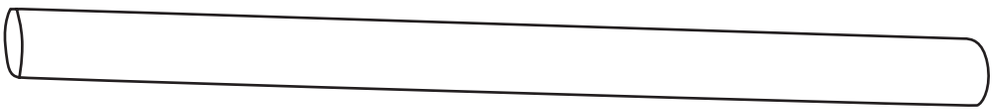

Foam Rod

Foam Roller Attachment Assembly

1. Attach the Foam rods onto slot for the Foam roller attachment bracket.
2. Place the foams onto each end of the Rod.
3. Slot the attachment into the holes for the rack when using for lat pull down bar.

Landmine Barbell Bracket

Nut

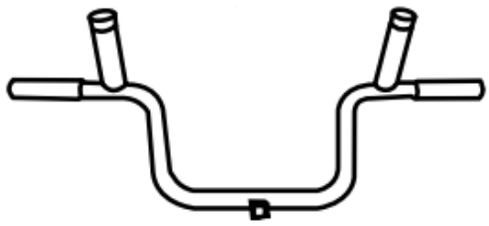

Landmine Handle

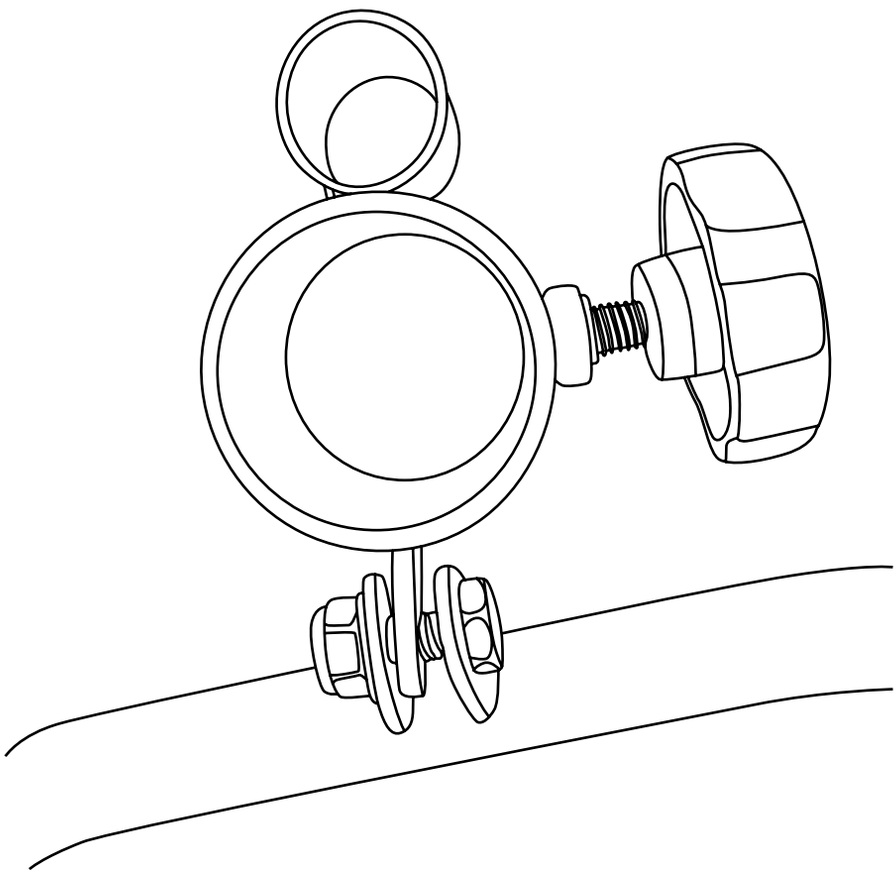

Landmine Handlebar Assembly

1. Bolt the landmine barbell bracket to the landmine handles (with screws from the landmine handle).
2. When using with separate barbell. Insert barbell into the barbell bracket and tighten with the nut.

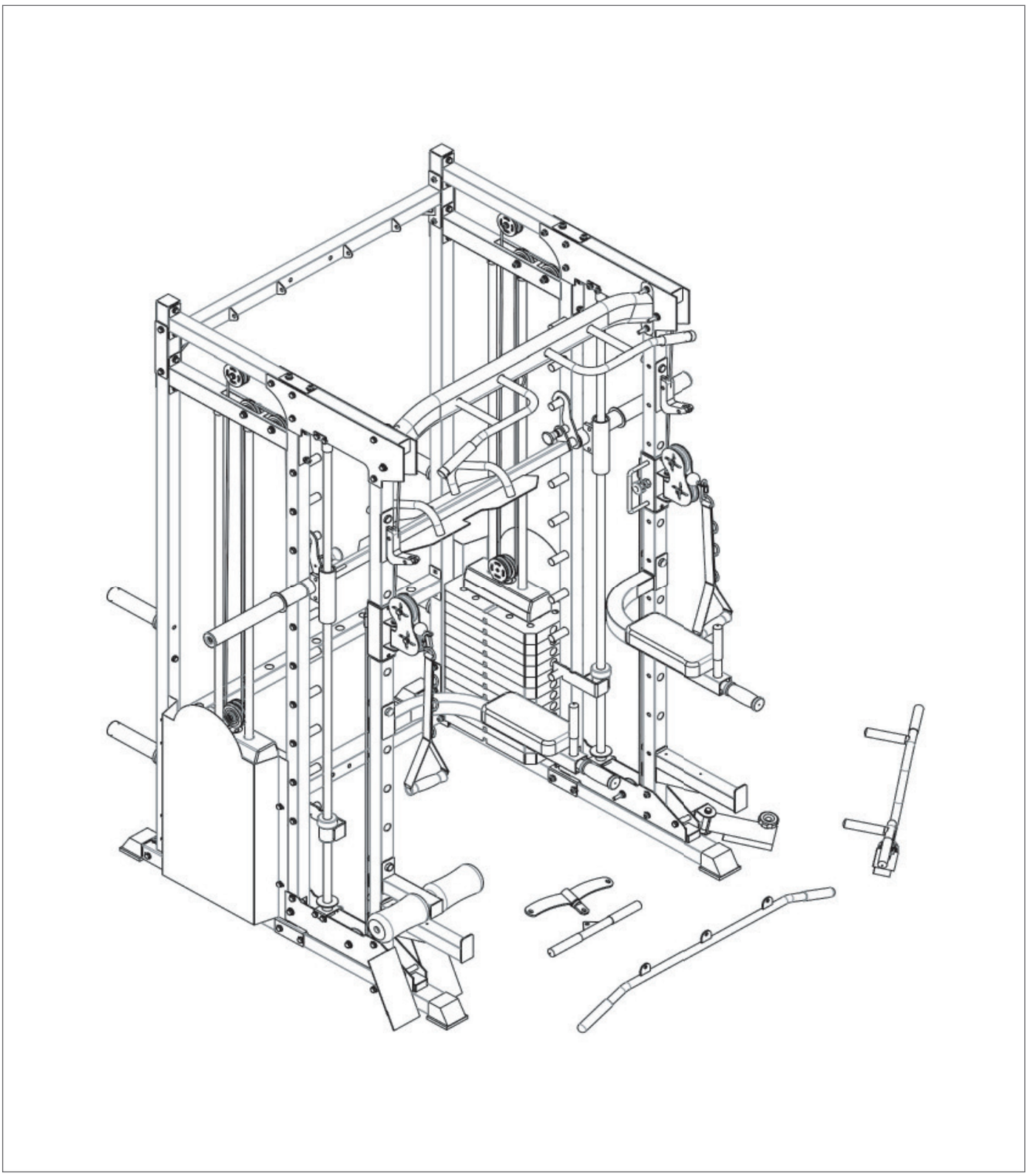

Product Installation Completed

Install the remaining auxiliary parts in the position shown in the diagram and check to lock all bolts and nuts. Here your product installation is complete.

V. EXERCISE GUIDE

! PLEASE NOTE:

Before beginning any exercise program, consult your physician. This is important especially if you are over the age of 45 or individuals with pre-existing health problems.

The pulse sensors are not medical devices. Various factors, including the user's movement, may affect the accuracy of heart rate readings. The pulse sensors are intended only as an exercise aid in determining heart rate trends in general.

Exercising is great way to control your weight, improving your fitness and reduce the effect of aging and stress. The key to success is to make exercise a regular and enjoyable part of your everyday life.

The condition of your heart and lungs and how efficient they are in delivering oxygen via your blood to your muscles is an important factor to your fitness. Your muscles use this oxygen to provide enough energy for daily activity. This is called aerobic activity. When you are fit, your heart will not have to work so hard. It will pump a lot fewer times per minute, reducing the wear and tear of your heart.

So as you can see, the fitter you are, the healthier and greater you will feel.

WARM UP

Start each workout with 5 to 10 minutes of stretching and some light exercises. A proper warm-up increases your body temperature, heart rate and circulation in preparation for exercise. Ease into your exercise.

After warming up, increase the intensity to your desired exercise program. Be sure to maintain your intensity for maximum performance. Breathe regularly and deeply as you exercise.

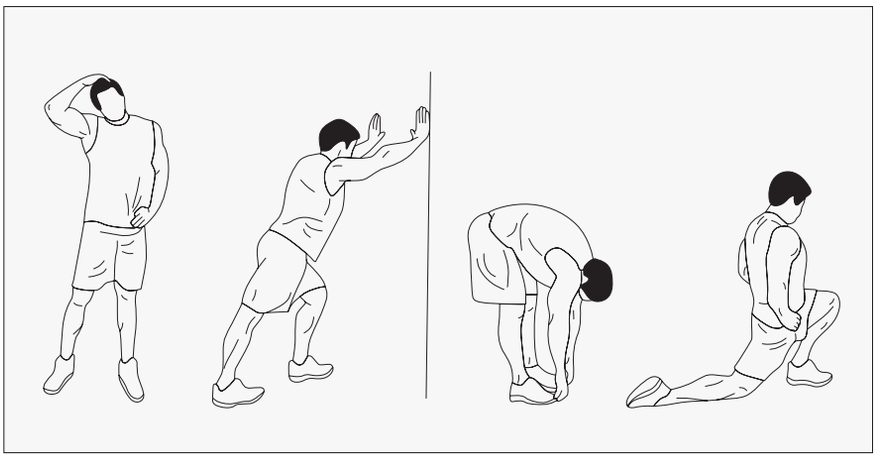

COOL DOWN

Finish each workout with a light jog or walk for at least 1 minute. Then complete 5 to 10 minutes of stretching to cool down. This will increase the flexibility of your muscles and will help prevent post-exercise problems.

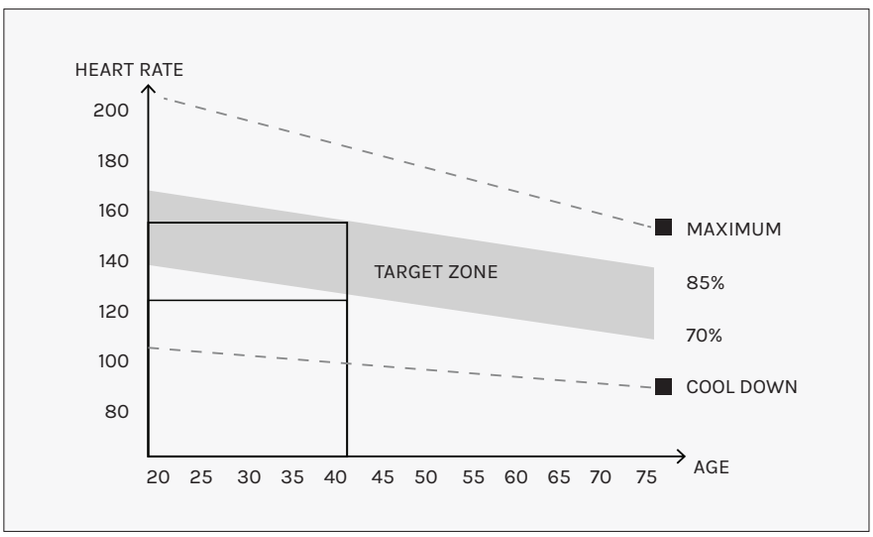

WORKOUT GUIDELINES

! This is how your pulse should behave during general fitness exercise. Remember to warm up and cool down for a few minutes.

VI. MAINTENANCE

MAINTENANCE METHOD:

To extend the service life of the device, the parts must be lubricated on time. The product has been initially lubricated before leaving the factory, but lubrication is required between the guide rod and the weight plate over time.

! **NOTE**: Silicon oil/spray is recommended for lubrication.

1. Pulley and wire ropes should be regularly checked for signs of wear.
2. Check and adjust the tension of the wire rope regularly.
3. Check all moving parts regularly. If there is a damaged part, stop using the device immediately and contact the store.
4. Ensure all bolts and nuts are fully fixed and re-tighten them when it is loose.
5. Check the welding for cracks.
6. Failure to perform routine maintenance may cause personal injury or equipment damage.
7. Ensure any handle attachments are fully secured before use to prevent from injury.

VII. WARRANTY

AUSTRALIAN CONSUMER LAW

Many of our products come with a guarantee or warranty from the manufacturer. In addition, they come with guarantees that cannot be excluded under the Australian Consumer Law. You are entitled to a replacement or refund for a major failure and compensation for any other reasonably foreseeable loss or damage.

You are entitled to have the goods repaired or replaced if the goods fail to be of acceptable quality and the failure does not amount to a major failure. Full details of your consumer rights may be found at **www.consumerlaw.gov.au**.

Please visit our website to view our full warranty terms and conditions:
http://www.lifespanfitness.com.au/warranty-repairs

WARRANTY AND SUPPORT

Any claim against this warranty must be made through your original place of purchase.
Proof of purchase is required before a warranty claim may be processed.

If you have purchased this product from the Official Lifespan Fitness website, please visit
https://lifespanfitness.com.au/warranty-form

For support outside of warranty, if you wish to purchase replacement parts or request a repair or service, please visit h**ttps://lifespanfitness.com.au/warranty-form** and fill in our Repair/Service Request Form or Parts Purchase Form.

Scan this QR code with your device to go to **lifespanfitness.com.au/warranty-form**

CORTEX®

WWW.LIFESPANFITNESS.COM.AU