GRK-110 Space Saving Multi Function Rack with 73kg Cable Crossover

USER MANUAL

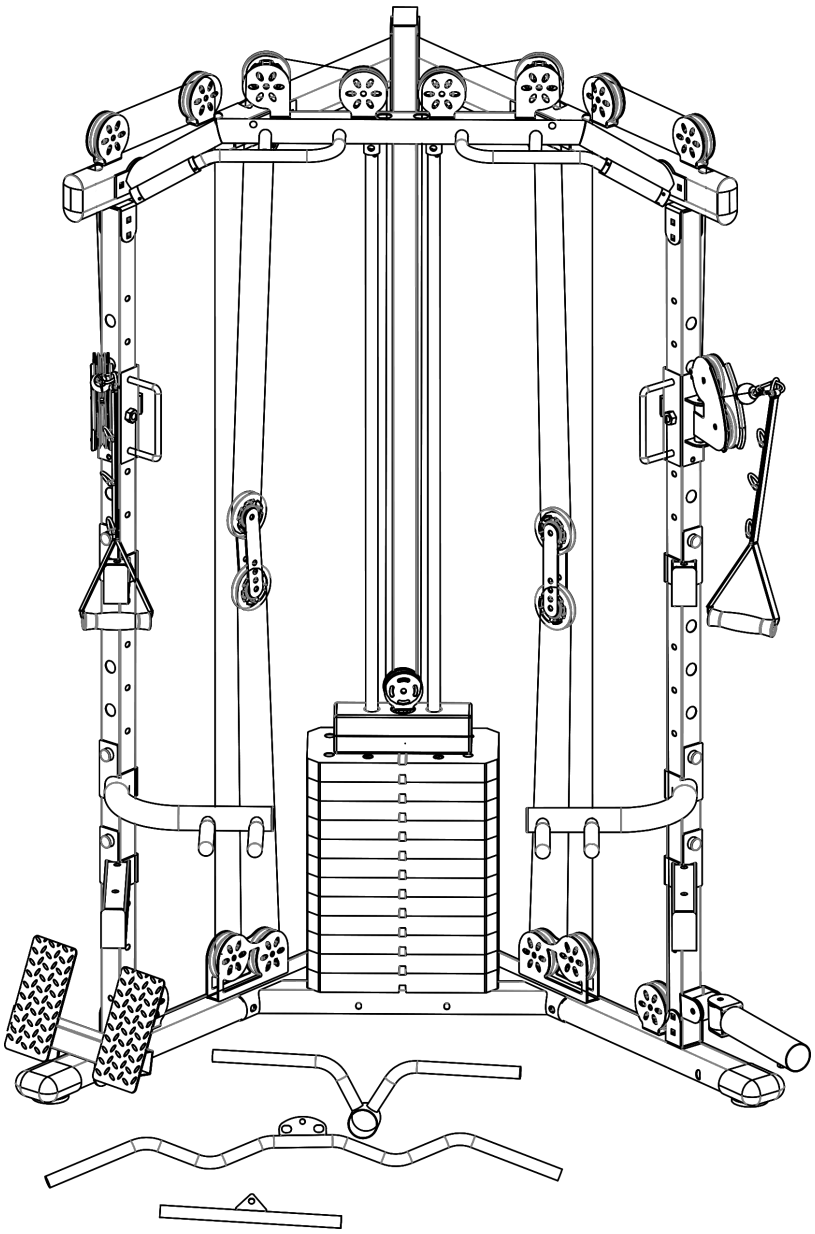

Find the Digital Manual Online

Product may vary slightly from the item pictured due to model upgrades.

Read all instructions carefully before using this product.
Retain this owner's manual for future reference.

NOTE:
This manual may be subject to updates or changes. Up to date manuals are available through our website at www.lsgfitness.com.au

TABLE OF CONTENTS

I. Important Safety Instructions 03

II. Parts List 04

III. Assembly Instructions 06

IV. Exercise Guide 13

V. Warranty 15

I. IMPORTANT SAFETY INSTRUCTIONS

WARNING: Read all instructions before using this machine.

- This equipment is for home use only, not for commercial use.
- Install the product on a flat level surface.
- Place your unit on a solid, level surface when in use.
- Never allow children on or near the machine.
- Keep hands away from all moving parts.
- Never drop or insert any object into any openings.
- Care must be taken when lifting or moving the equipment so as not to injure your back. Always use proper lifting techniques and/or seek assistance if necessary.
- Keep children and pets away from the machine at all times. DO NOT leave children unattended in the same room with the machine.
- Only 1 person at a time should use the machine.
- If the user experiences dizziness, nausea, chest pain, or any other abnormal symptoms, STOP the workout at once. CONSULT A PHYSICIAN IMMEDIATELY.
- Do not use the machine near water or outdoors.
- Keep hands away from all moving parts.
- Always wear appropriate workout clothing when exercising. DO NOT wear robes or other clothing that could become caught in the machine. Running or aerobic shoes are also required when using the machine.
- Use the machine only for its intended use as described in this manual. DO NOT use attachments not recommended by the manufacturer.
- Do not place any sharp objects around the machine.
- Users with disabilities should not use the machine without a qualified person or physician in attendance.
- Never operate the machine if the machine is not functioning properly.
- A spotter is recommended during exercise.

II. PARTS LIST

A1

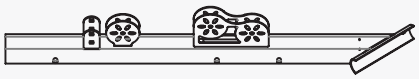

Part #A1 - 1pc

A2

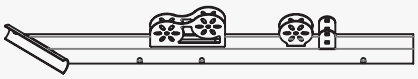

Part #A2 - 1pc

B1

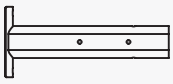

Part #B1 - 1pc

B2

Part #B2 - 1pc

C

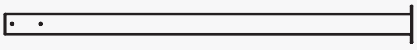

Part #C1 - 1pc

D1

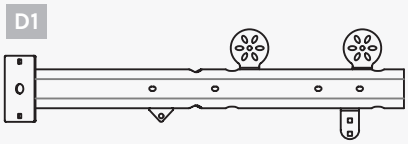

Part #D1 - 1pc

D2

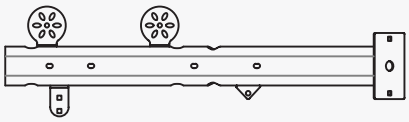

Part #D2 - 1pc

E

Part #E1 - 1pc

F

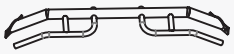

Top Frame Chin
Up Post - 1pc

G

Pulley Slider - 2pcs

H

Part #H1 - 2pcs

I

Safety Bar (R)
1pc

J

Safety Bar (L)
1pc

K

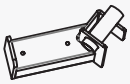

J-hook (L) - 1pc

L

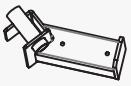

J-hook (R) - 1pc

M

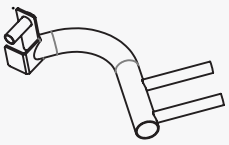

Dip Handle
Attachment (R) - 1pc

N

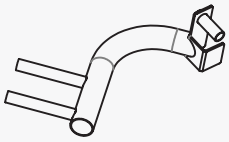

Dip Handle
Attachment (L) - 1pc

O

Foot Plate - 1pc

P

Landmine Post - 1pc

Q

Weight Stack Rod
Selector - 1pc

R

Curl Lat Pull Down
Bar Attachment - 1pc

S

Straight Row Bar
Attachment - 1pc

T

Landmine Post Handle
Attachment - 1pc

U

160 Connecting Plates - 2pcs

V

150 Connecting Plate - 1pc

W

107 Connecting Plates - 2pcs

Y

Part #Y1 - 1pc

Z

Weight Guide Rod - 2pcs

1

Stainless Steel Pipe - 2pcs

2

Select Pin - 1pc

3

M10 Knob - 1pc

4

Shock Absorber Pads - 2pcs

5

Cable Handles - 2pcs

6

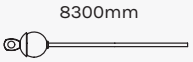

Steel Wire Rope - 2pcs

7

Weight Stack (Small) - 1pc

8

Weight Stack (Large) - 12pcs

9

Hook - 2pcs

10

3-Hole U-Seat - 1pc

11

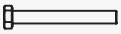

10X80 - 2pcs

12

M10X120 - 8pcs

13

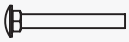

M10X70 - 20pcs

14

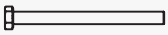

M10x110 - 2pcs

15

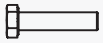

M10x45 - 23pcs

16

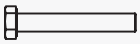

M10x65 - 1pc

17

M10 Nut - 60pcs

18

⌀10 Washer - 102pcs

19

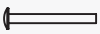

M10X45 - 2pcs

20

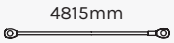

Steel Wire Rope - 1pc

21

Pulley Adjustment Plate - 4pcs

22

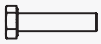

M10x20 - 2pcs

23

Cannon Barrel Rotation - 1pc

24

Pulley - 22pcs

25

78mm Pulley - 1pc

III. ASSEMBLY INSTRUCTIONS

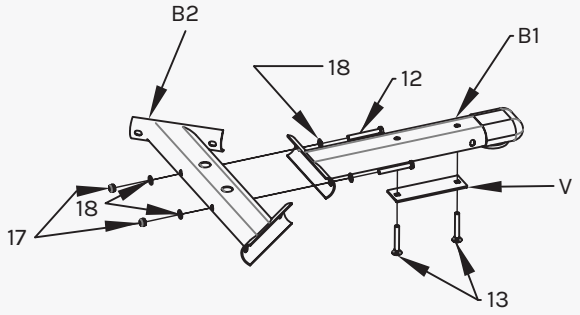

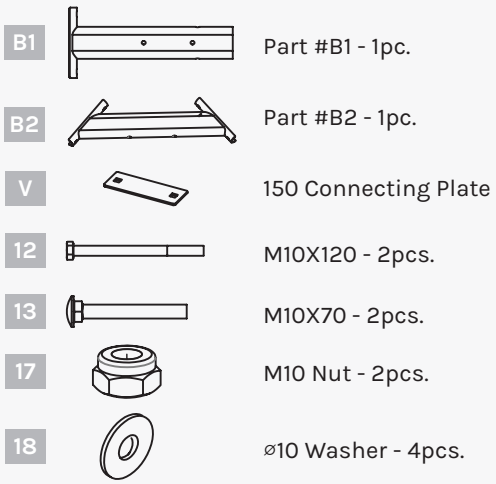

STEP 1

1. Pre-install the connecting plate (V) with bolts (13) onto part (B1).
2. Attach B1 to B2 using 2x bolt (12), 4x washers (18) and 2x nuts (17).

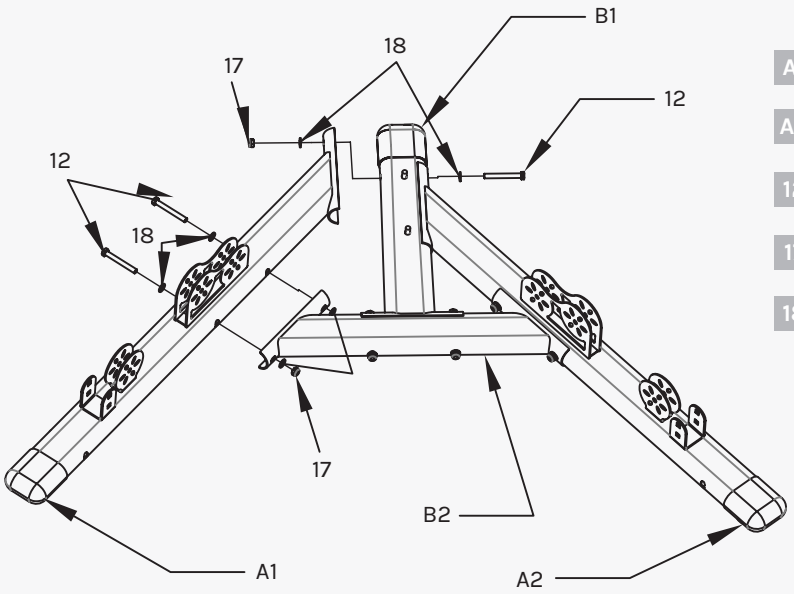

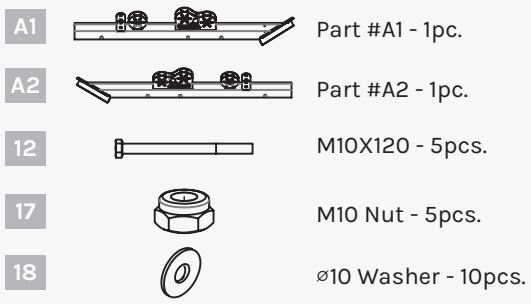

STEP 2

1. Secure A1 and A2 to B1 using bolt (12), 2x washer (18) and nut (17).
2. Secure A1 to B2 using 2x bolts (12), 4x washers (18) and 2x nuts (17).
3. Secure A2 to B2 using 2x bolts (12), 4x washers (18) and 2x nuts (17).

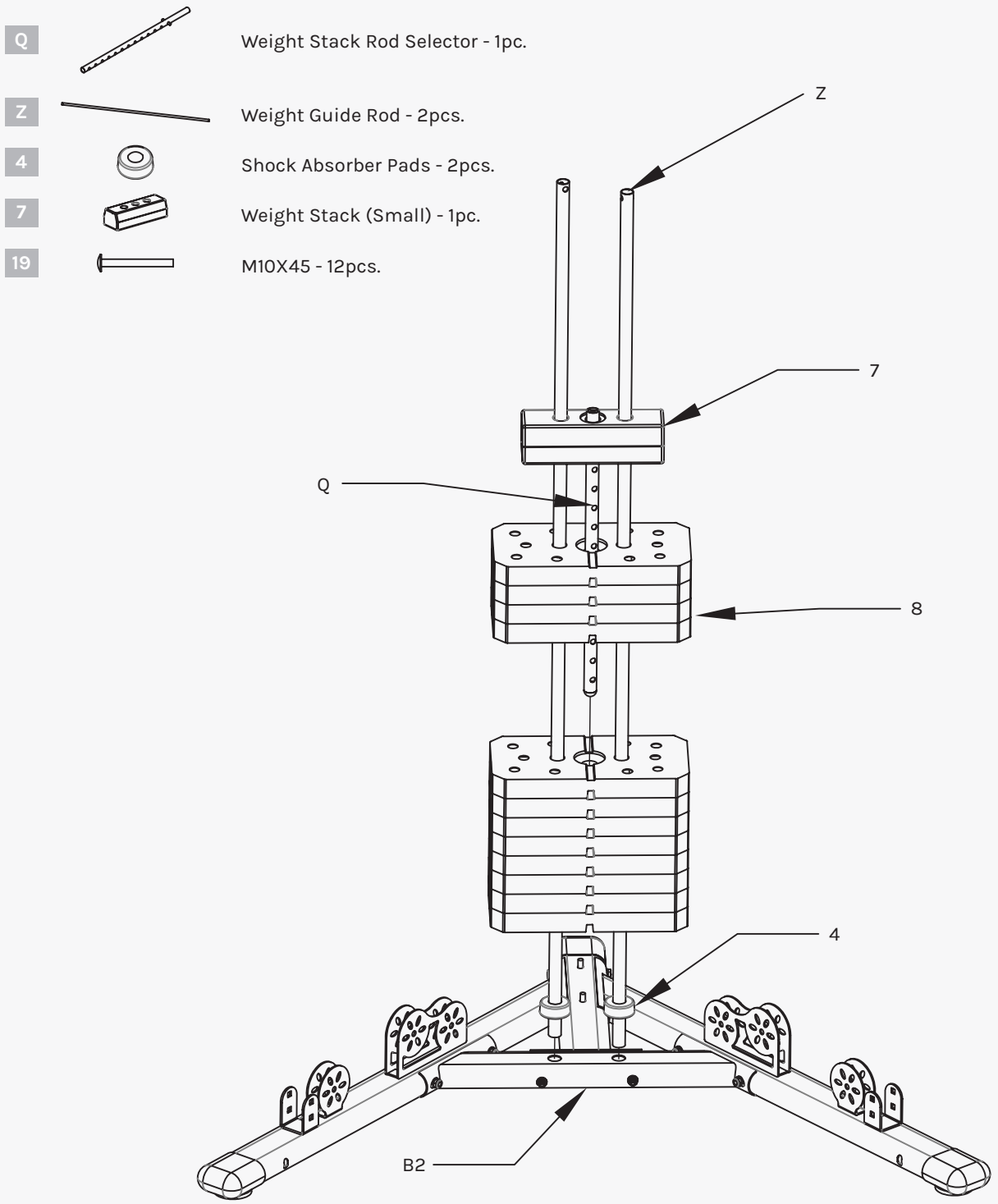

STEP 3

1. Place 2x part (Z) in the holes on B2.
2. Place 2x part (4) into the rods (Z), followed by 12x large weight stacks (8) and small weight stack (7).
3. In the middle of the weight stack plates insert the weight selector rod (Q) in the middle hole. Have the holes on the rod line up to the holes on the weight stack.

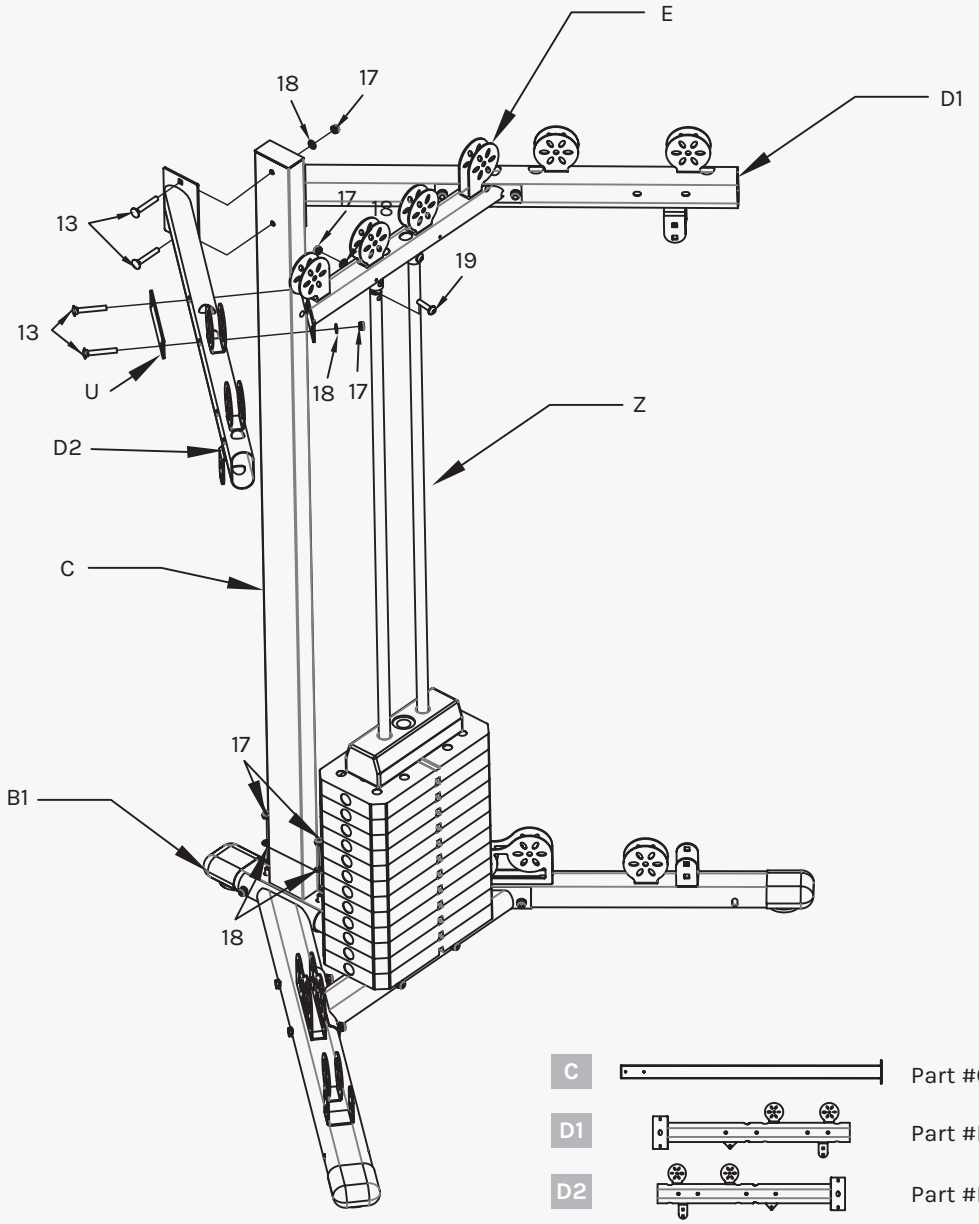

C		Part #C1 - 1pc.
D1		Part #D1 - 1pc.
D2		Part #D2 - 1pc.
E		Part #E1 - 1pc.
U		160 Connecting Plates - 2pcs.
13	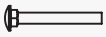	M10X70 - 6pcs.
17		M10 Nut - 12pcs.
18		ø10 Washer - 12pcs.
19		M10X45 - 2pcs.

STEP 4

1. Attach C to B1 on the pre-installed bolts and lock with 2x washers (18) and 2x nuts (17).
2. Secure part E to Z using 2x bolts (19), 2x washers (18) and 2x nuts (17).
3. Secure D1 and D2 to C using 2x bolts (13)
4. Secure part E to D1 and D2 on each side using 1x U plate, 2x bolts (13), 2x washers (18) and 2x nuts (17).

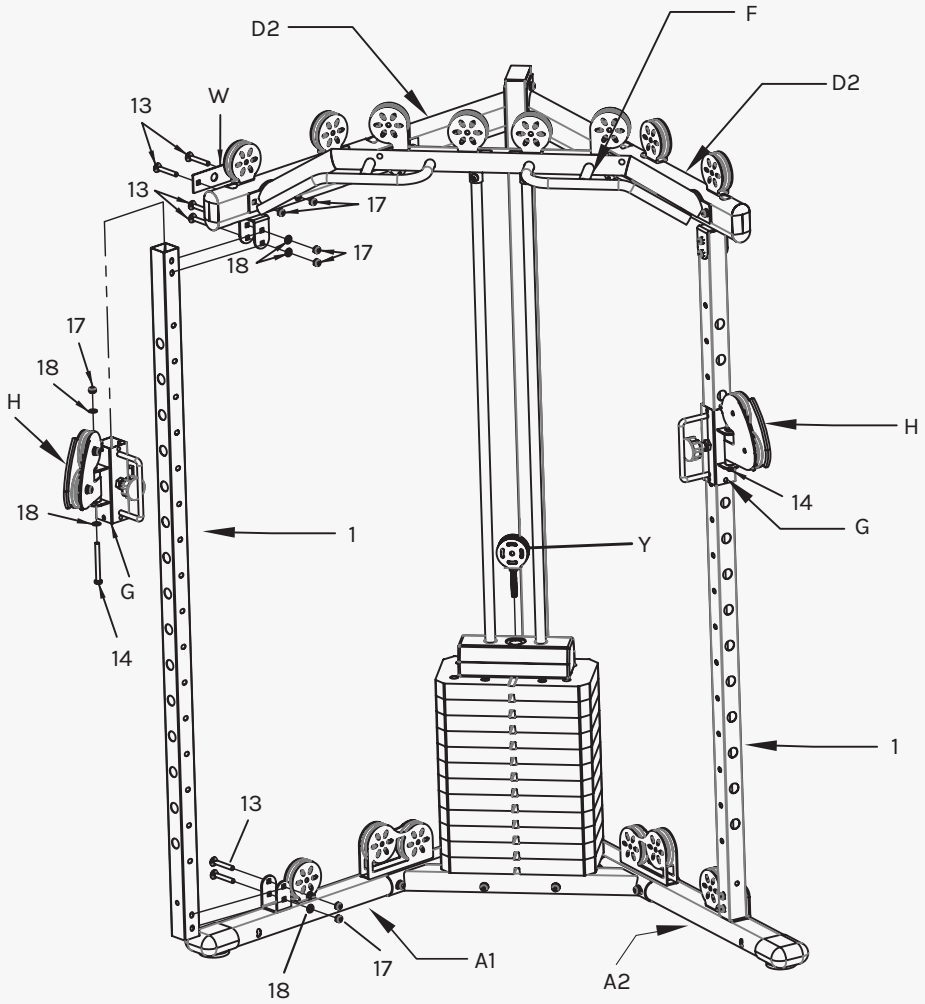

F		Top Frame Chin Up Post - 1pc.	1		Stainless Steel Pipe - 2pcs.
G		Pulley Slider - 2pcs.	13	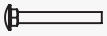	M10X70 - 12pcs.
H		Part #H1 - 2pcs.	14		M10x110 - 3pcs.
W		107 Connecting Plates - 2pcs.	15	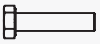	M10x45 - 1pc.
Y		Part #Y1 - 1pc.	17		M10 Nut - 11pcs.
			18		ø10 Washer - 13pcs.
			25		78mm Pulley - 1pc.

STEP 5

1. Place pulley slider (G) into the post (1).
2. Secure the posts (1) to the frame of A1 and A2 using 2x bolts (13), 2x washers (18) and 2x nuts (17) on each side.
3. Secure the posts (1) to the frame of D1 and D2 using 2x bolts (13), 2x washers (18) and 2x nuts (17) on each side.
4. On each side attach the pulley (H) to pulley slider (G) using 1x bolt (14), 2x washer (18) and 1x nut (17).
5. Secure (Y) to the weight selector rod (Q).
6. In the next steps for the cables you will need bolts (15), washer (18) and nuts (17) to install the pulleys after placing the ropes to pulley (24) and (25).

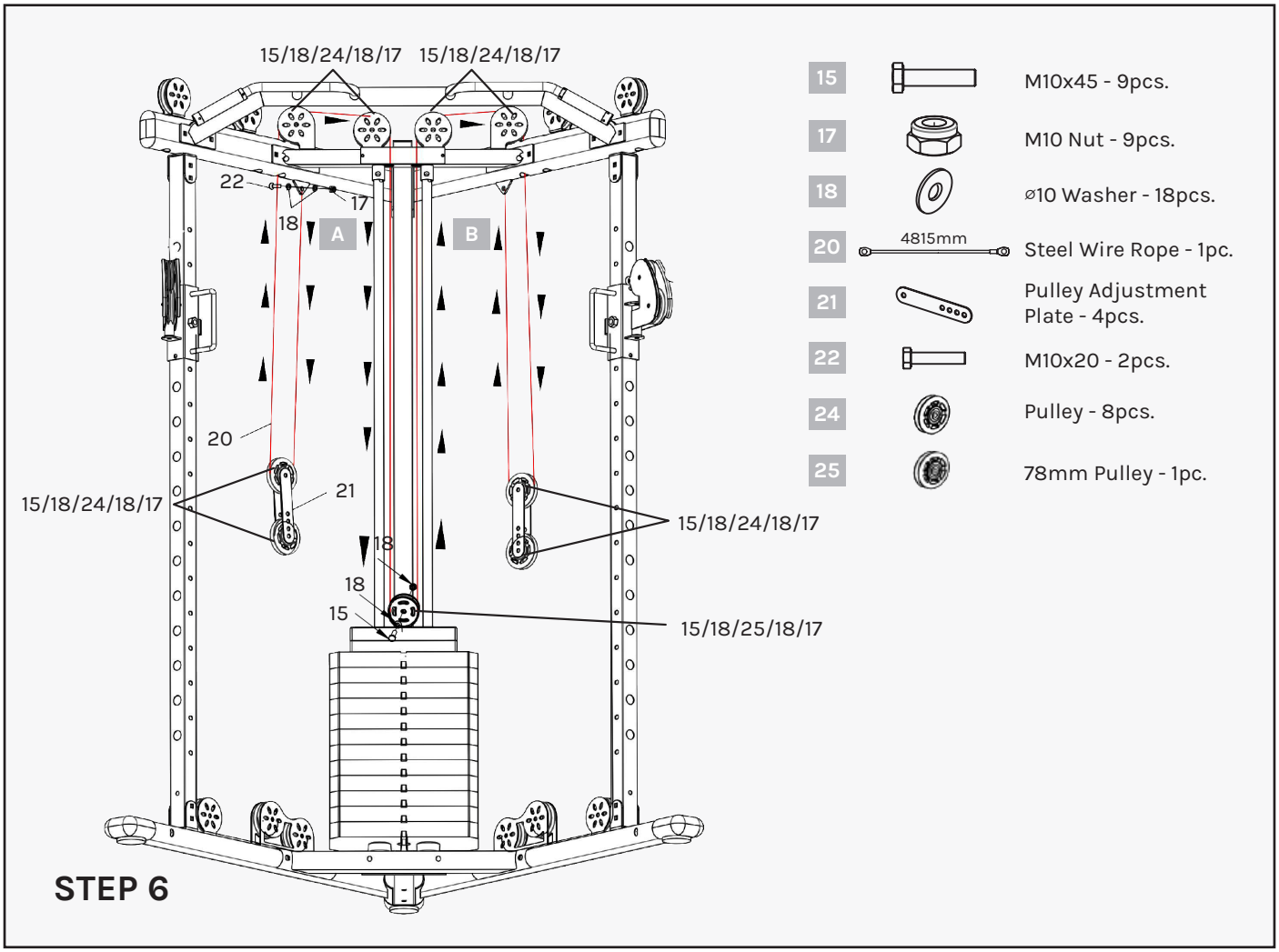

Follow the arrow direction from point A to B to install the cable.

NOTE:

- Feed the ropes into the pulleys before securing the pulley to frame.
- See the diagram for the hardware required for each pulley.
- Washers go on both sides of the pulley.

Cable installation start from point A:

1. Use bolt (22), 2x washers (18) and nut (17) to secure cable (20) to frame.
2. Follow the cable diagram to secure the 2x pulley (24) with 2x pulley adjustment plate (21) and secure with hardware. Feed the rope into only the top pulley as shown.
3. Follow the cable and feed into frame of part D2 and going to the part E pulley. Add 2x pulley (24) and secure with hardware.
4. Come back down to add pulley (25) into part (Y) and secure with hardware.
5. Follow back up to the top of part E and add 2x pulley (24).
6. Feed the cable into part D1 hole and repeat Step 2 then Step 1.

IMPORTANT:

Before use, check that the pulleys are rolling properly and does not run off the track. If they pulleys are not running smoothly, it may be too tight - loosen the bolt slightly.
Do not allow the bolts to be too loose as this can cause the cables to run off the track.
Apply a bit of silicon oil (if needed) to allow the cables to run smoothly.

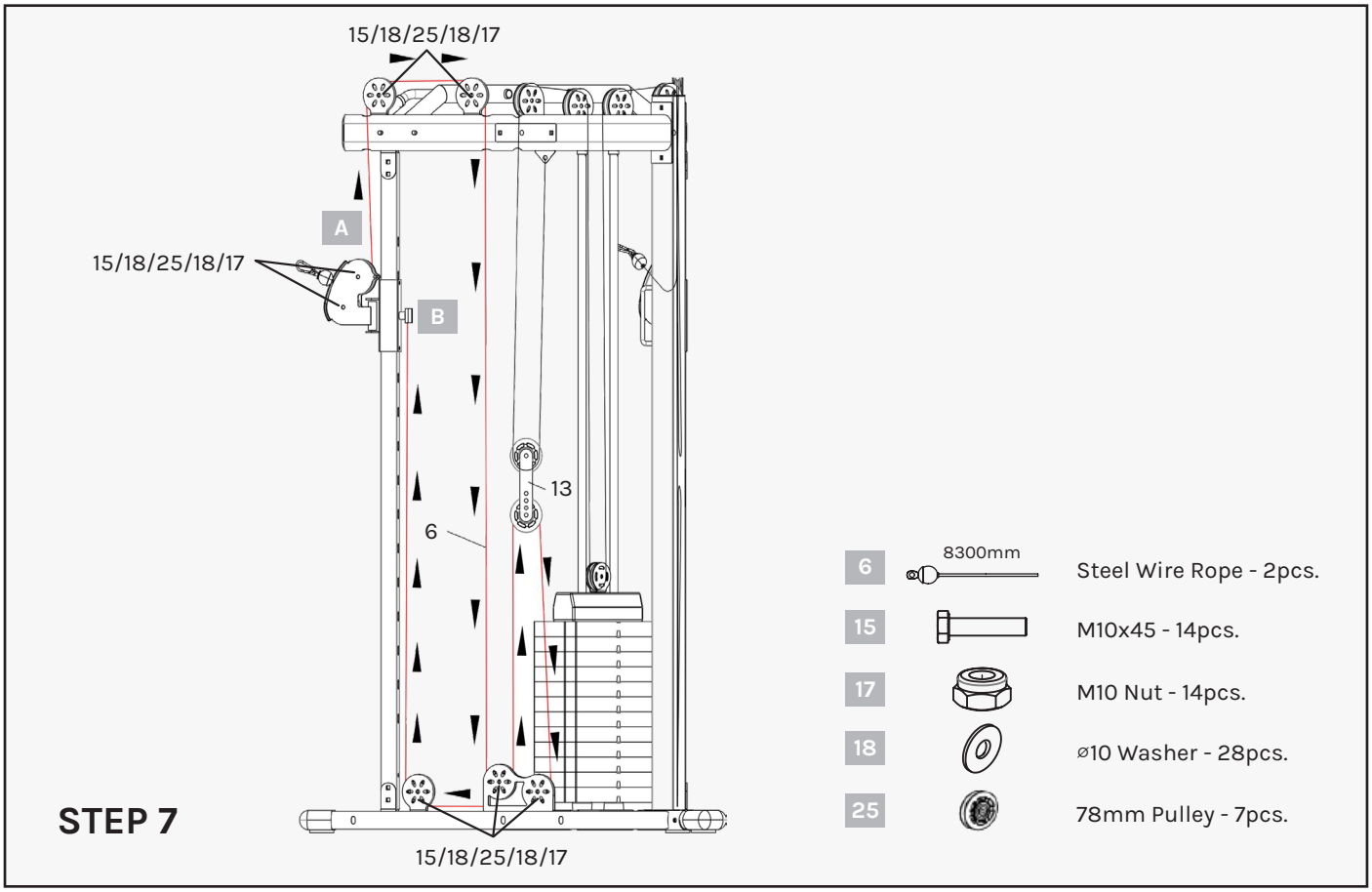

Follow the arrow direction from point A to B to install the cable.

NOTE:

- Feed the ropes into the pulleys before securing the pulley to frame.
- See the diagram for the hardware required for each pulley.
- Washers go on both sides of the pulley.
- Left and right side cables are assembled the same way.

Cable installation start from point A:

1. Using cable (6) and place it to pulley (24) to secure to part (H). Ball side should be facing out of part (H). Secure with the hardware listed.
2. Follow the line diagram to feed the cable into frame D1 and add 2x pulley (24) and secure with hardware listed.
3. Pass the cable to one of the bottom pulley brackets and add pulley (24), secure with hardware.
4. Feed the cable to the top on the bottom pulley attached to part (13). Add pulley (24) and secure with hardware.
5. Follow the cable back down to the bottom pulley, add pulley (24) and secure with hardware.
6. Bring the cable back to the bottom front pulley bracket, add pulley (24) and secure with hardware.
7. Finally bring the cable to the top and secure to the back of pulley slider (G).
8. Repeat for the opposite side.

IMPORTANT:

Before use, check that the pulleys are rolling properly and does not run off the track. If they pulleys are not running smoothly, it may be too tight - loosen the bolt slightly.
Do not allow the bolts to be too loose as this can cause the cables to run off the track.
Apply a bit of silicon oil (if needed) to allow the cables to run smoothly.

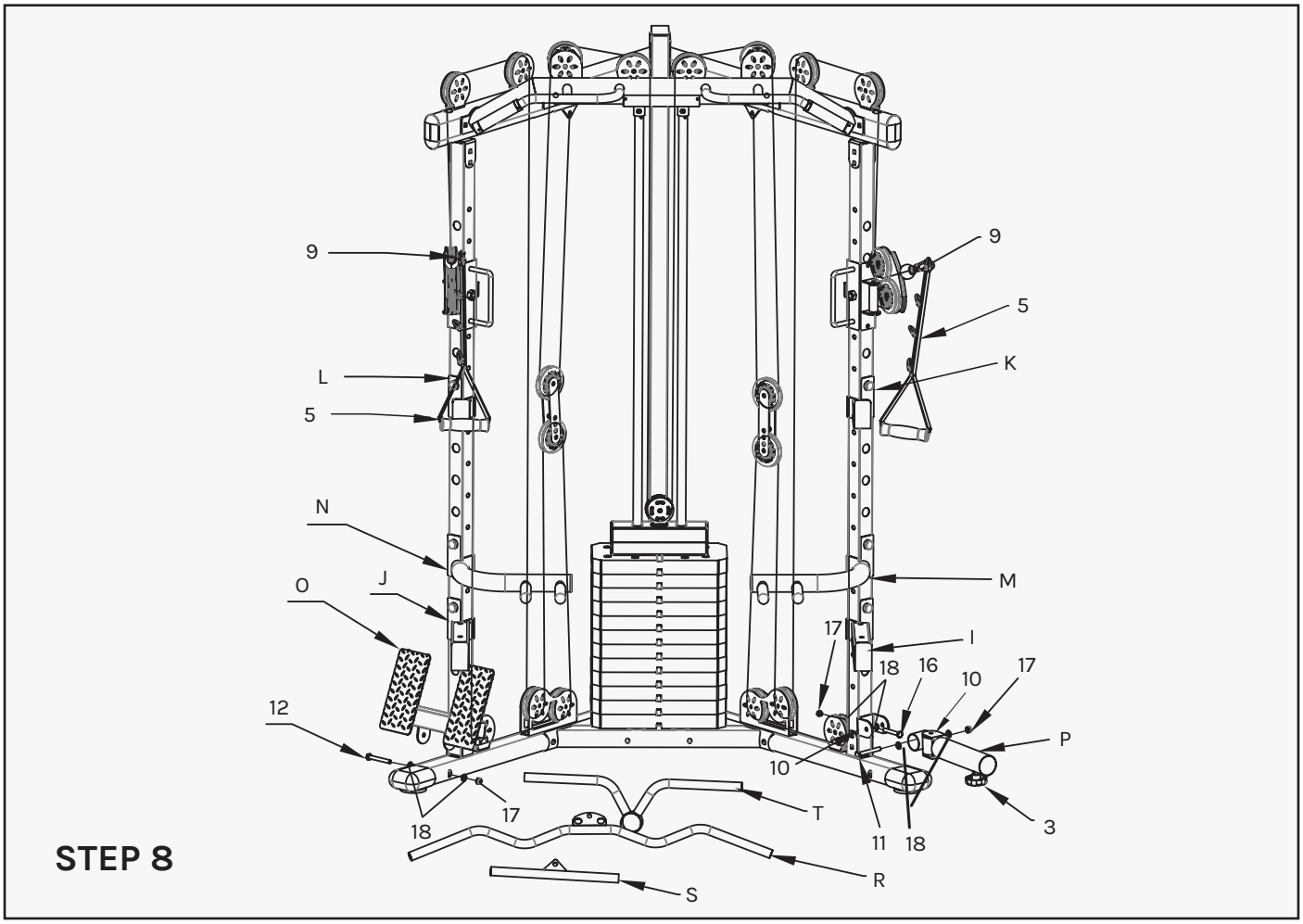

ACCESSORIES INSTRUCTIONS

Foot Plate: Install the foot plate to the bottom feet using 1x bolt (12), 2x washers (18), 1x nut (17).

Landmine Post:

1. Secure 3 hole U seat (10) to upright frame post using bolt (16), 2x washers (18) and nut (17).
2. Secure cannon barrel (23) to the U seat using bolt (11), 2x washers (18) and nut (17).
3. Secure landmine post (P) to cannon barrel using bolt (11), washer (18) and nut (17)
4. To use, place an Olympic barbell into the landmine post and use knob (3) to secure the barbell.
5. Optional: You can use the landmine handle (T) on the other side of the barbell (once you have added your weight plates).

Cable Attachment: Attach hook (9) to the ball end of the cable and secure cable attachment based on your exercise (cable handle (5), curl lat bar (R), straight bar (S))

J-Hook and Safety Bar: Hook the J-hook (L/K) and safety bar (J/I) to the posts when in use.

Dip Handles: Hook the dip handles (N/M) when in use.

- Ensure all bolts and nuts are securely tightened using a wrench.
- Your equipment is now fully assembled.
- Before use, verify that all pulleys and wire ropes are securely fastened.
- During the initial use, adjust the steel wire rope as needed based on actual conditions.

IV. EXERCISE GUIDE

PLEASE NOTE:

Before beginning any exercise program, consult your physician. This is important especially if you are over the age of 45 or individuals with pre-existing health problems.

The pulse sensors are not medical devices. Various factors, including the user's movement, may affect the accuracy of heart rate readings. The pulse sensors are intended only as an exercise aid in determining heart rate trends in general.

Exercising is great way to control your weight, improving your fitness and reduce the effect of aging and stress. The key to success is to make exercise a regular and enjoyable part of your everyday life.

The condition of your heart and lungs and how efficient they are in delivering oxygen via your blood to your muscles is an important factor to your fitness. Your muscles use this oxygen to provide enough energy for daily activity. This is called aerobic activity. When you are fit, your heart will not have to work so hard. It will pump a lot fewer times per minute, reducing the wear and tear of your heart.

So as you can see, the fitter you are, the healthier and greater you will feel.

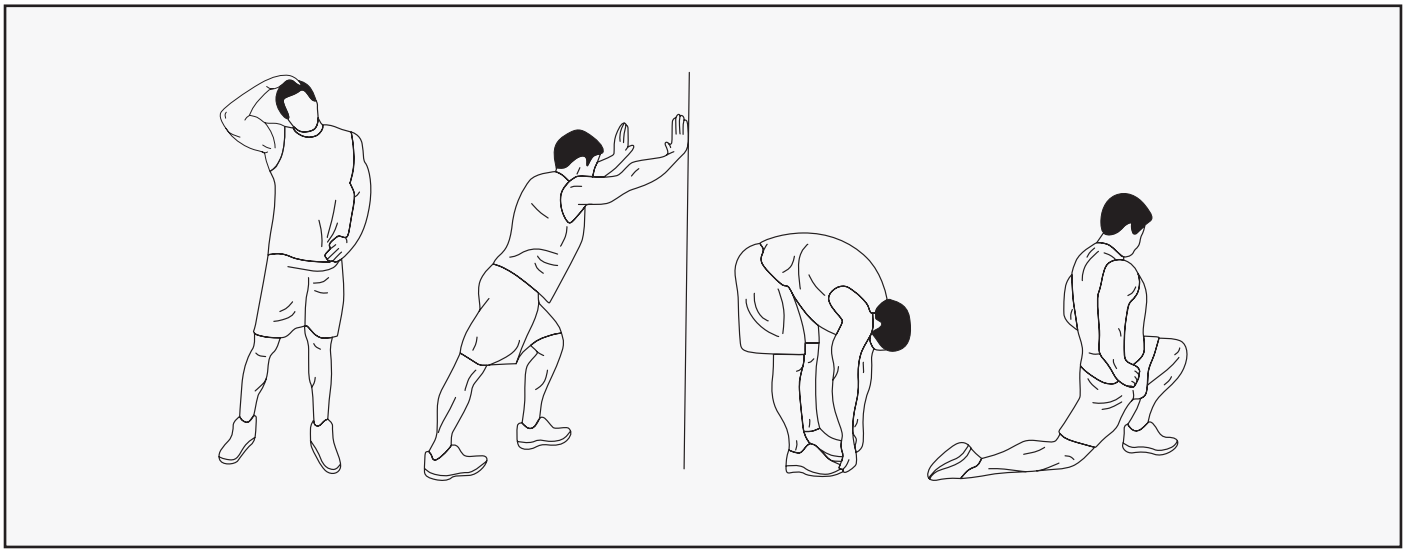

WARM UP

Start each workout with 5 to 10 minutes of stretching and some light exercises. A proper warm-up increases your body temperature, heart rate and circulation in preparation for exercise. Ease into your exercise.

After warming up, increase the intensity to your desired exercise program. Be sure to maintain your intensity for maximum performance. Breathe regularly and deeply as you exercise.

COOL DOWN

Finish each workout with a light jog or walk for at least 1 minute. Then complete 5 to 10 minutes of stretching to cool down. This will increase the flexibility of your muscles and will help prevent post-exercise problems.

WORKOUT GUIDELINES

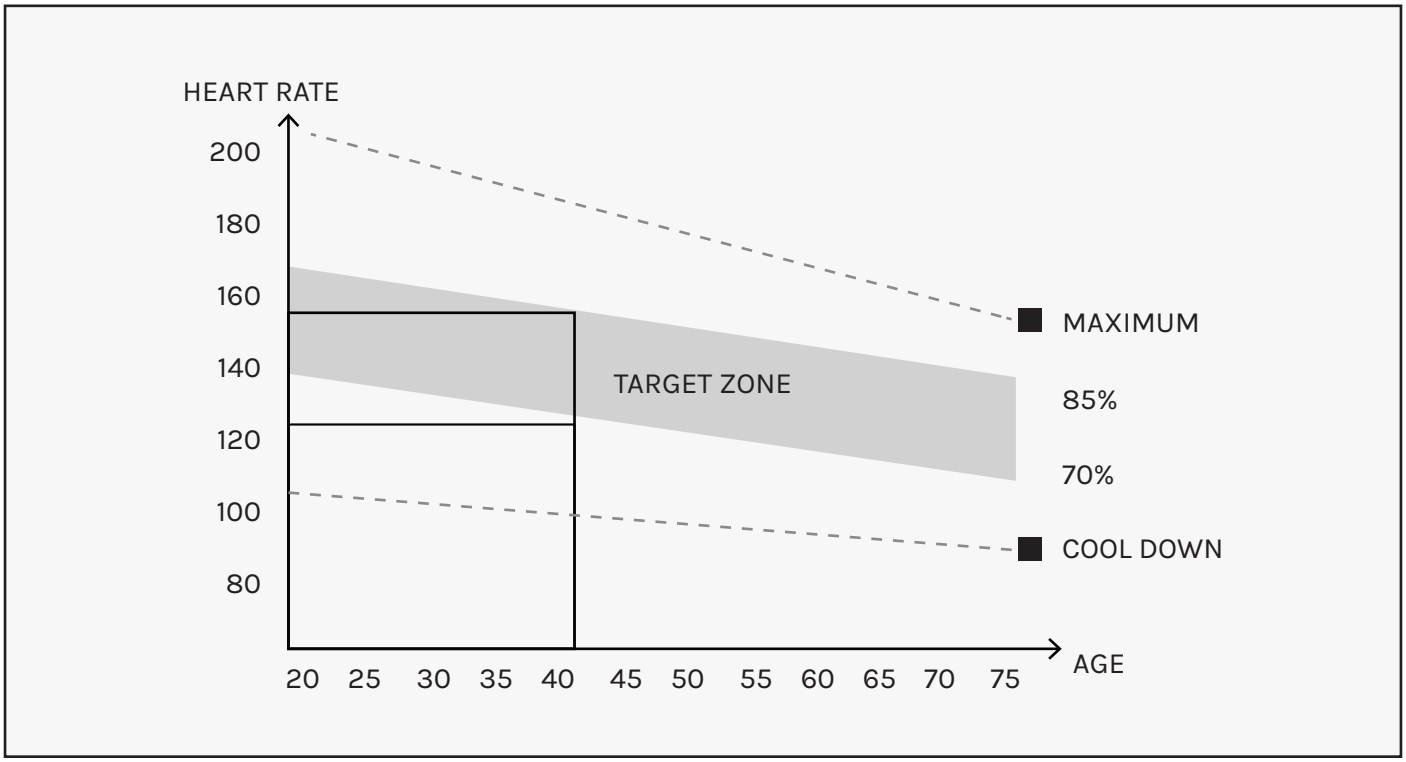

This is how your pulse should behave during general fitness exercise. Remember to warm up and cool down for a few minutes.

The most important factor here is the amount of effort you put in. The harder and longer you work, the more calories you will burn.

V. WARRANTY

AUSTRALIAN CONSUMER LAW

Many of our products come with a guarantee or warranty from the manufacturer. In addition, they come with guarantees that cannot be excluded under the Australian Consumer Law. You are entitled to a replacement or refund for a major failure and compensation for any other reasonably foreseeable loss or damage.

You are entitled to have the goods repaired or replaced if the goods fail to be of acceptable quality and the failure does not amount to a major failure. Full details of your consumer rights may be found at **www.consumerlaw.gov.au**.

Please visit our website to view our full warranty terms and conditions:
http://www.lifespanfitness.com.au/warranty-repairs

WARRANTY AND SUPPORT

Please email us at **support@lifespanfitness.com.au** for all warranty or support issues.

For all warranty or support related enquiries, please lodge a support ticket first by sending us an email.

LSG

WWW.LSGFITNESS.COM.AU