LSG

RB-2 Recumbent Bike

USER MANUAL

Product may vary slightly from the item pictured due to model upgrades.

Read all instructions carefully before using this product.
Retain this owner's manual for future reference.

NOTE:
This manual should not be used to guide your purchasing decision. Your product, and the contents inside its carton, may vary from what is listed in this manual. This manual may also be subject to updates or changes. Updated manuals are available through our website at www.lsgfitness.com.au

TABLE OF CONTENTS

I. Important Safety Instructions 03

II. Care Instructions 04

III. Exploded Diagram 05

IV. Parts List 06

V. Assembly Instructions 07

VI. How to Guide 12

VII. Computer Operation 13

VIII. Exercise Guide 16

IX. Warranty 18

I. IMPORTANT SAFETY INSTRUCTIONS

⚠ WARNING: Read all instructions before using this machine.

It is important your machine receives regular maintenance to prolong its useful life. Failing to regularly maintain your machine may void your warranty.

Please keep this manual with you at all times.

- It is important to read this entire manual before assembling and using the equipment. Safe and effective use can only be achieved if the equipment is assembled, maintained and used properly. **PLEASE NOTE:** It is your responsibility to ensure that all users of the equipment are informed of all warnings and precautions

- Before starting any exercise program you should consult your doctor to determine if you have any medical or physical conditions that could put your health and safety at risk, or prevent you from using the equipment properly. Your doctor's advice is essential if you are taking medication that affects your heart rate, blood pressure or cholesterol level.

- Be aware of your body's signals. Incorrect or excessive exercise can damage your health. Stop exercising if you experience any of the following symptoms: pain, tightness in your chest, irregular heartbeat, and extreme shortness of breath, lightheadedness, dizziness or feelings of nausea. If you do experience any of these symptoms, you should consult your doctor before continuing with your exercise program.

- Keep children and pets away from the equipment. This equipment is designed for adult use only.

- Use the equipment on a solid, flat level surface with a protective cover for your floor or carpet. To ensure safety, the equipment should have at least 2 meters of free space around it.

- Before using the equipment, check that the nuts and bolts are securely tightened. If you hear any unusual noises coming from the equipment during use and assembly, stop immediately. Do not use the equipment until the problem has been rectified.

- Wear suitable clothing while using the equipment. Avoid wearing loose clothing that may get caught in the equipment or that may restrict or prevent movement.

- This equipment is designed for indoor and family use only.

- Care must be taken when lifting or moving the equipment so as not to injure your back.

- Always keep this instruction manual and assembly tools at hand for reference.
- The equipment is not suitable for therapeutic use.
- The pulse or heart rate sensors are not medical devices. Various factors, including the user's movement, may affect the accuracy of heart rate readings. The pulse sensors are intended only as exercise aids in determining heart rate trends in general.

II. CARE INSTRUCTIONS

- Lubricate moving joints with grease after periods of usage.
- Be careful not to damage plastic or metal parts of the machine with heavy or sharp objects.
- The machine can be kept clean by wiping it down using dry cloth.
- All nuts and bolts are to be checked and tightened on a regular basis. This includes pedals and other moving parts. Failure to do so may cause damage to your thread and void your warranty.

BATTERY USAGE

- Batteries are to be installed or replaced by adults only.
- Do not use rechargeable batteries. Do not mix different battery types. Do not mix old and new batteries. Do not mix alkaline, standard (Carbon-Zinc), or rechargeable (Nickel-Cadmium batteries.
- Remove batteries when product is not in use.
- Remove exhausted batteries from product and dispose of in accordance with the manufacturer's recommendation.

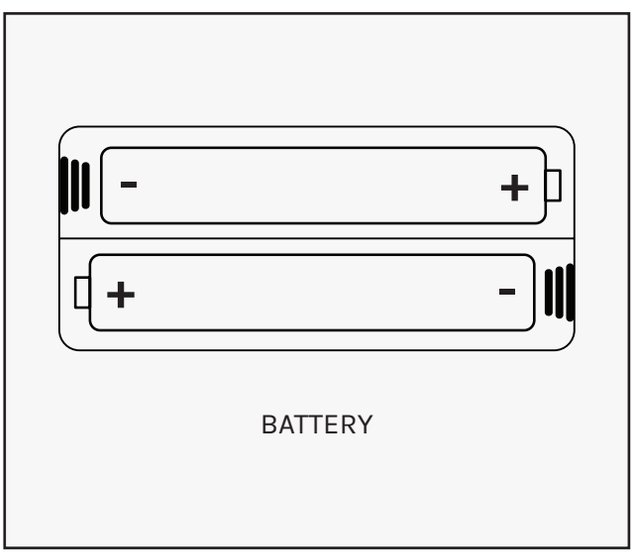

- Do not attempt to recharge non-rechargeable batteries.
- Batteries are to be inserted with correct polarity.
- The supply terminals are not to be short-circuited.
- Do not dispose of batteries in fire, batteries may explode or leak.

III. EXPLODED DIAGRAM

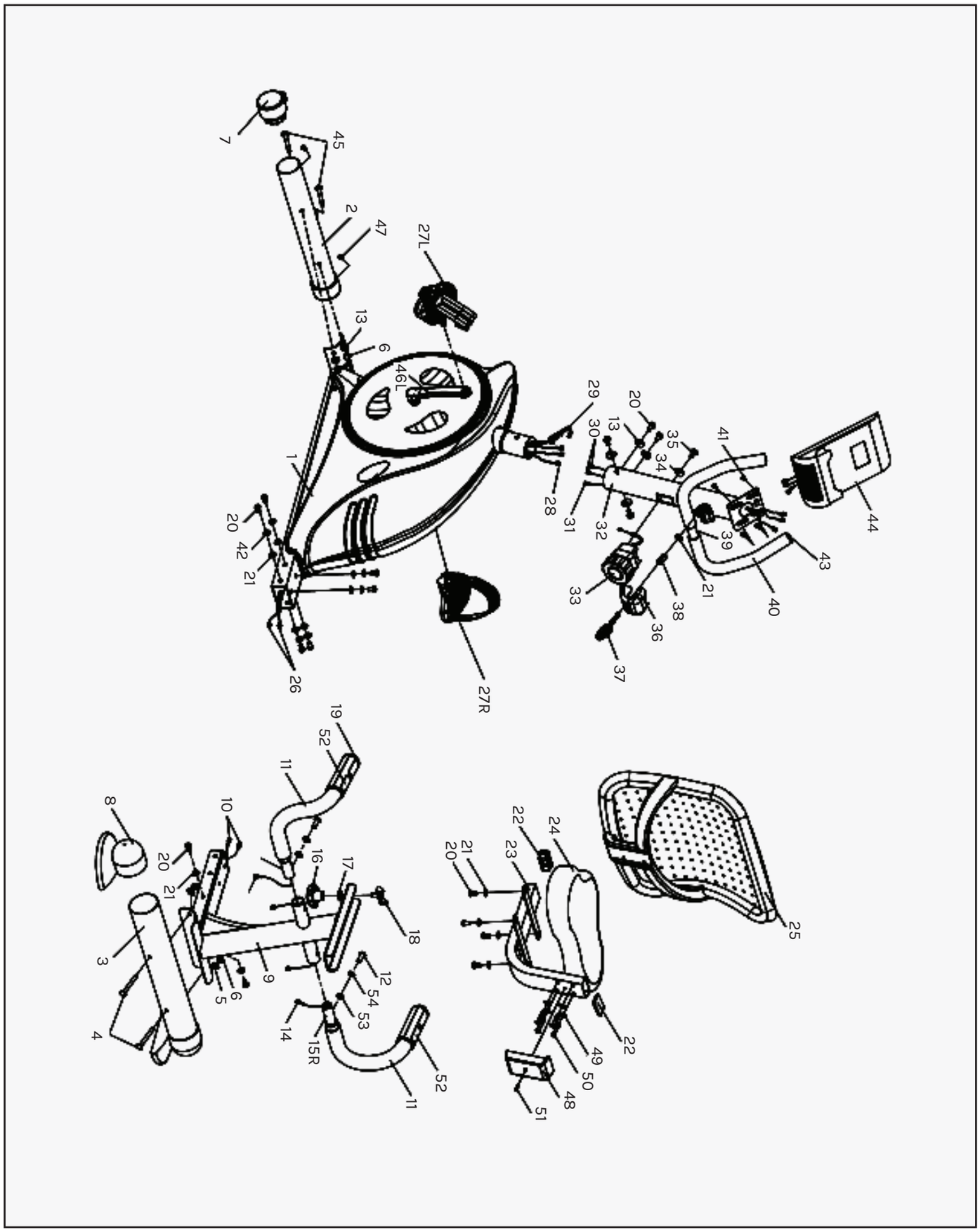

IV. PARTS LIST

(!) Some items on this list may come pre-installed on your equipment. If you feel like you're missing anything, please double check your equipment.

No.	Description	Qty
1	Front Main Frame	1
2	Front Stabilizer	1
3	Rear Stabilizer	1
4	Carriage Bolt M8x90	2
5	Arc Washer d8x2xΦ25xR39	2
6	Acorn Nut M8	4
7	Front End Cap	2
8	Rear End Cap	2
9	Rear Main Frame	1
10	Extension Pulse Wire 1	2
11	Foam Grip	2
12	Allen Bolt M10x20	2
13	Arc Washer Φ20xd8.5xR30	6
14	Pulse Wire	2
15L/R	Handlebar	1pr.
16	Plum Knob	1
17	Flat washer d10	1
18	U-bracket	1
19	End Cap	2
20	Screw M8x15	16
21	Flat Washer d8	13
22	Square End Cap	2
23	Seat Frame	1
24	Saddle	1
25	Backrest	1
26	Extension Pulse Wire 2	2
27L/R	Pedal	1pr.

No.	Description	Qty
28	Sensor Wire	1
29	Tension Connecting Wire	1
30	Extension Pulse Wire 3	2
31	Extension Sensor Wire	1
32	Handlebar Post	1
33	Tension Controller	1
34	Arc Washer d5	1
35	Screw M5x55	1
36	Handlebar Cover	1
37	Plastic Handlebar Screw	1
38	Spacer	1
39	Fixed Handlebar	1
40	Foam Grip	2
41	Screw M5x12	4
42	Spring Washer d8	6
43	End Cap	2
44	Computer	1
45	Carriage Bolt M8X73	2
46L/R	Crank	1pr.
47	Screw ST3x10	2
48	Back Bracket Cover	1
49	Flat Washer D6	4
50	Screw M6X40	4
51	Screw ST4.2X18	1
52	Grip Pulse Sensor	2
53	Nylon washer Φ10.8xΦ20x2	2
54	Flat washer D10xD20x2	2

V. ASSEMBLY INSTRUCTIONS

TOOLS

Most of the listed assembly hardware has been packaged separately, but some hardware items have been preinstalled in the identified assembly parts. In these instances, simply remove and reinstall the hardware as assembly is required.

Please reference the individual assembly steps and make note of all preinstalled hardware

PREPARATION

Prior to assembly, make sure that you will have enough space around the item; Use the present tooling for assembly; before assembling please check whether all needed parts are available.

It is strongly recommended this machine to be assembled by two or more people to avoid possible injury.

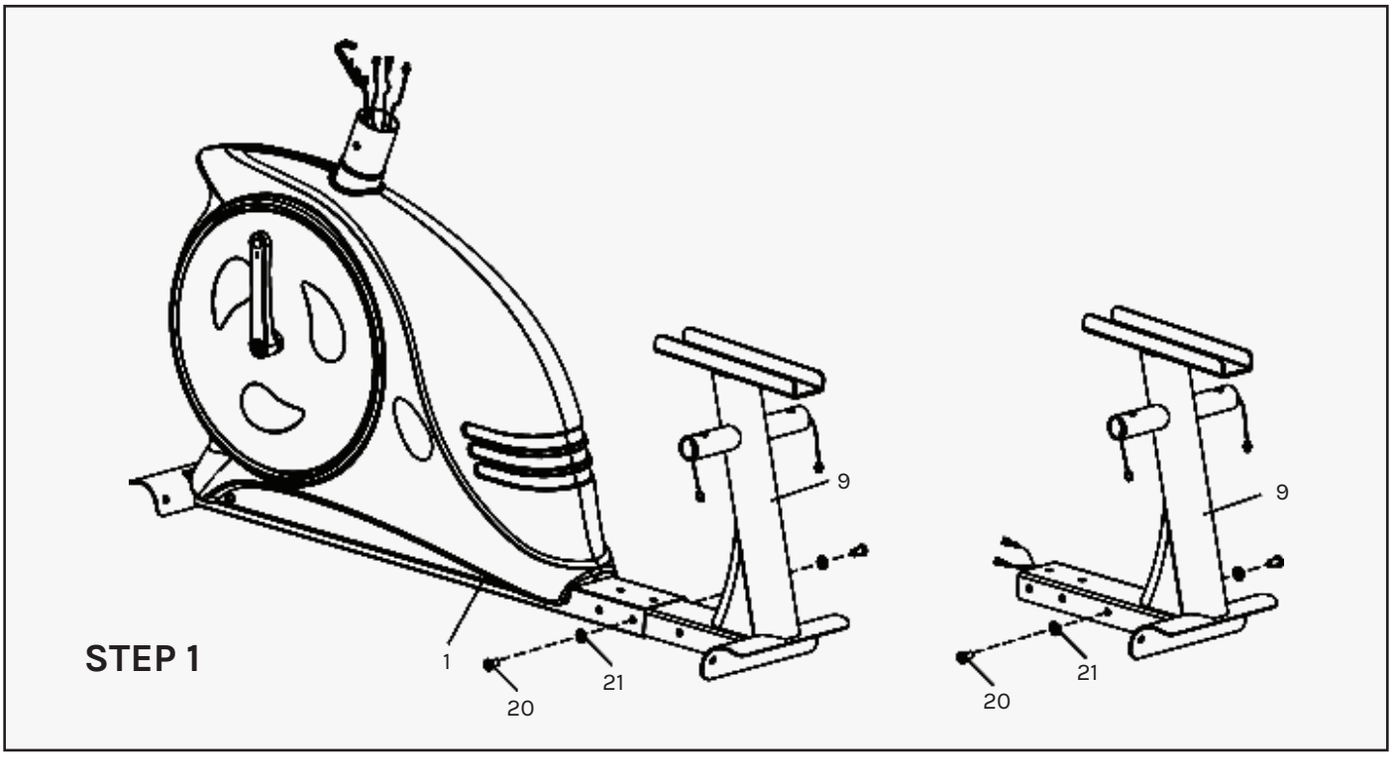

1. Disassemble the hex nut (20) and flat washer (21) from the front main frame (1) with the wrench. Then lock the hex nut (20) and flat washer (21) into the hole of the rear main frame (9).

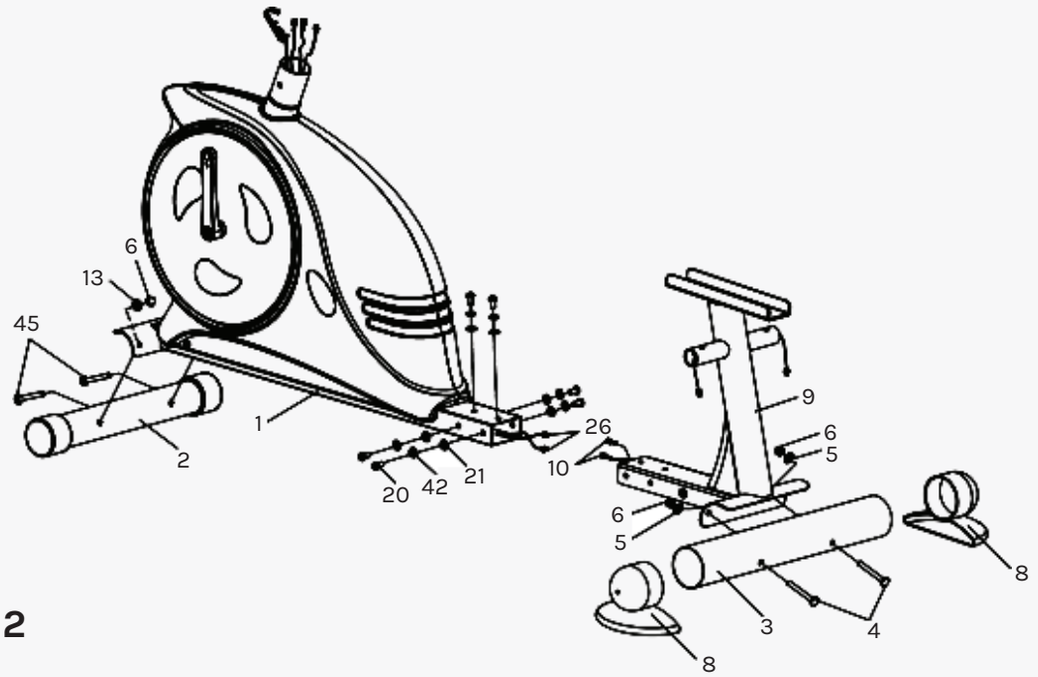

STEP 2

1. Cover two the rear end cap (8) to the ends of the rear stabilizer (3) respectively.

2. Lock the rear stabilizer (3) to the rear main frame (9) with carriage bolt (4), arc washer (5) and acorn nut (6).

3. Lock the front stabilizer (2) to the front main frame (1) with carriage bolt (45), arc washer (13) and acorn nut (6).

4. Connect the extension pulse wire 1 (10) with the extension pulse wire 2 (26) together, then fix the front main frame (1) to the rear main frame (9) with hex nut (20), spring washer (42) and flat washer (21).

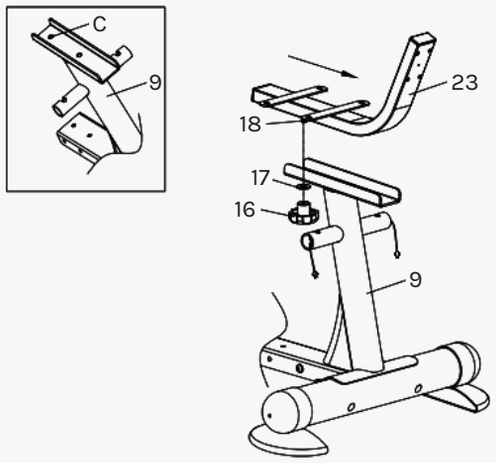

STEP 3

1. Secure the seat frame (23) on the rear main frame (9) with flat washer (17) and plum knob (16), adjusting to a suitable distance, then fasten tightly.

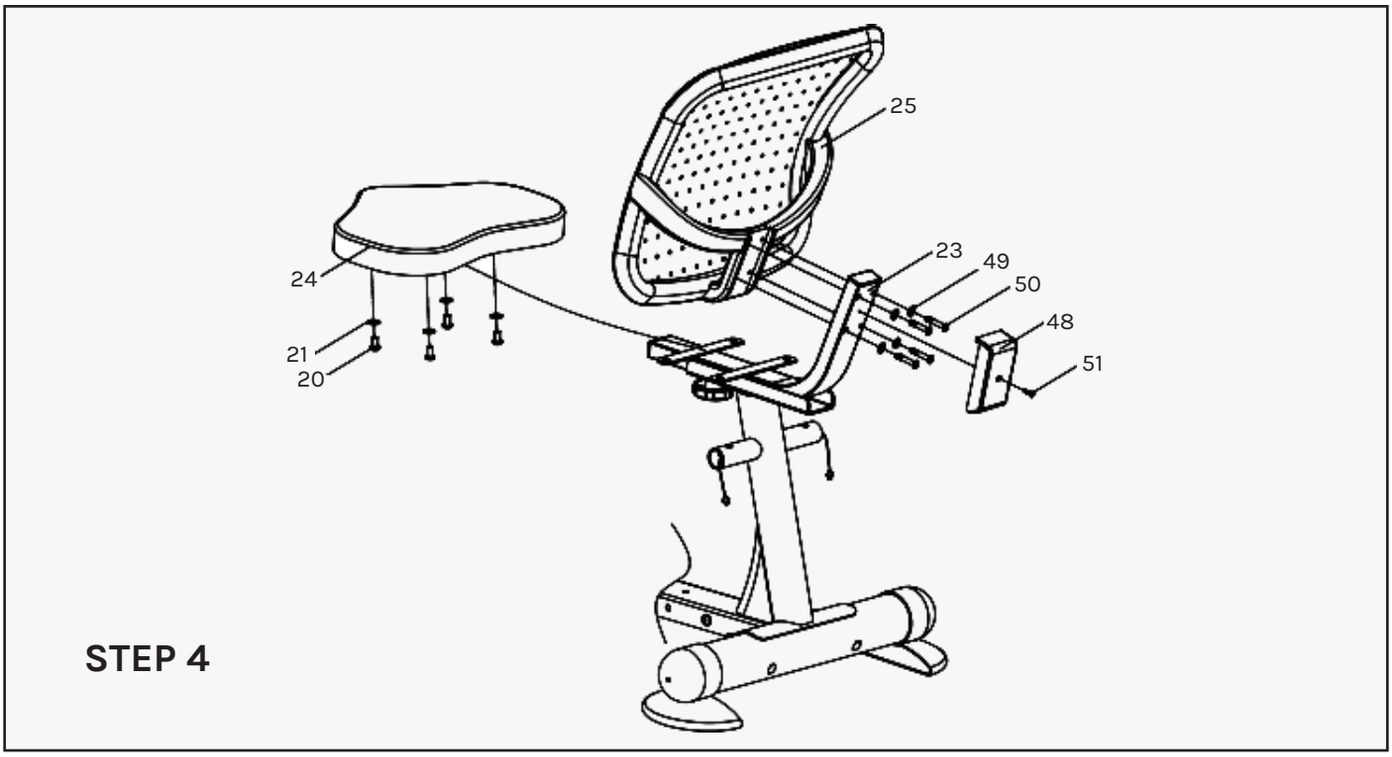

1. Lock the saddle (24) on the seat frame (23) with screw (20) and flat washer (21).

2. Lock the backrest (25) on the seat frame (23) with screw (50) and flat washer (49).

3. Fit the back bracket cover to the seat frame (23) with screw (51).

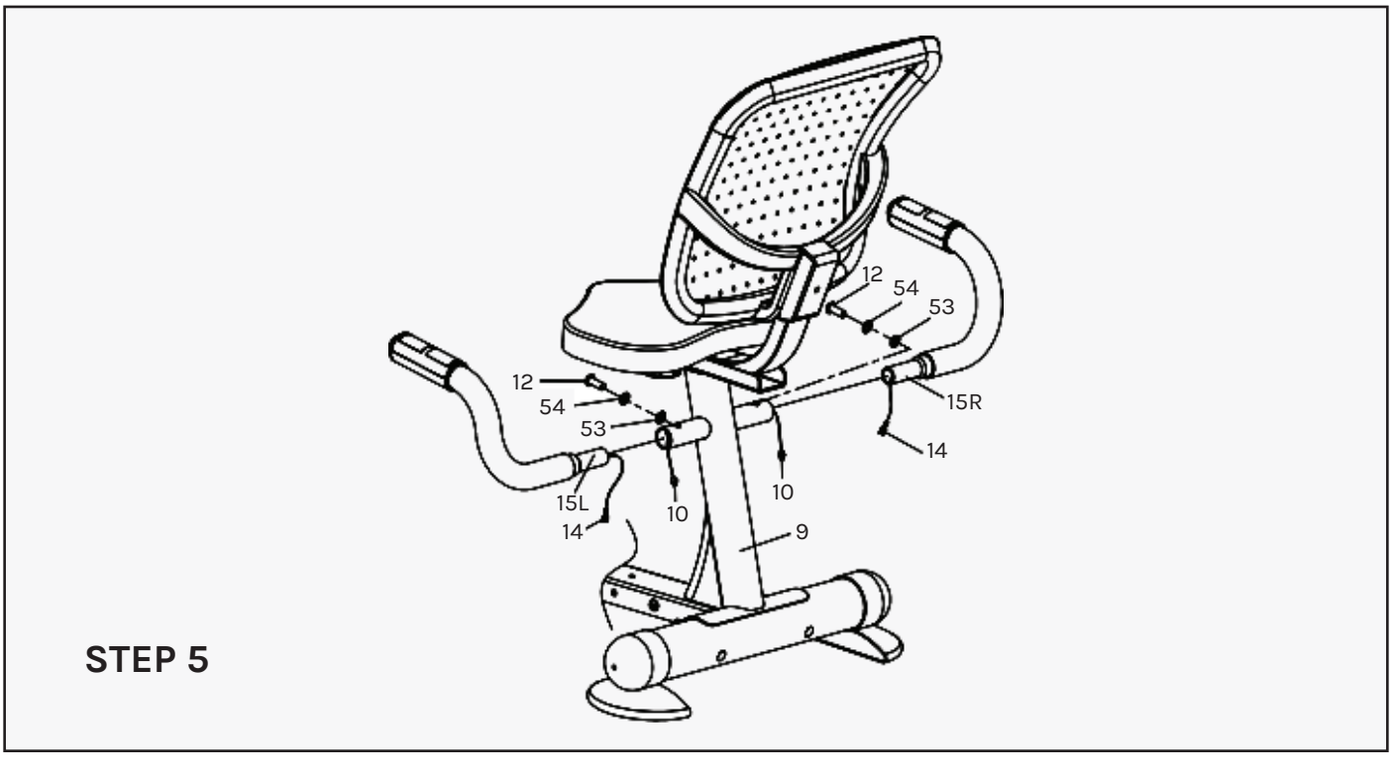

1. Connect the pulse wire (14) and the extension pulse wire 1 (10) together. Then fasten the handlebar (15L/R) to the rear main frame (9) tightly with Allen bolt (12), flat washer (54) and nylon washer (53).

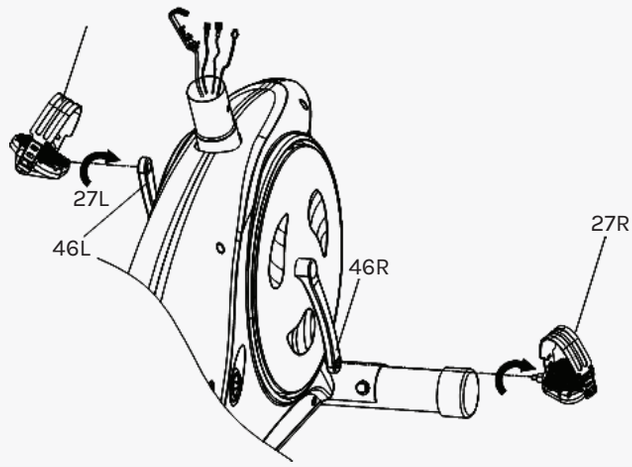

STEP 6

1. Lock the pedal (27L/R) to the crank (46L/R). Lock the pedal (27L/R) to the crank (46L/R).

Note: To tighten, turn the left pedal COUNTER-CLOCKWISE and the right pedal CLOCKWISE. And please make sure the pedal (27L/R) are locked tightly during your training, otherwise the pedal will be broken.

(!) **IMPORTANT:** FAILURE TO FOLLOW PROCEDURES MAY RESULT IN PERMANENT DAMAGE TO YOUR BIKE.

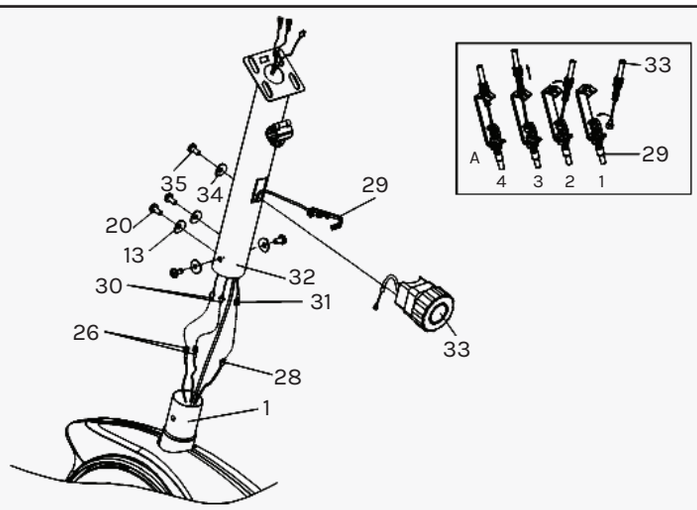

STEP 7

1. Connect the extension pulse wire 2 (26) with extension pulse wire 3 (30), and connect the extension wire (31) with sensor wire (28).

2. B: Feed the tension connecting wire (29) through the bottom of the handlebar post (32) and pull it out from the hole on the handlebar post (32).

3. Then connect the cable of the tension controller (33) with the hook of the tension connecting wire (29) as shown in picture A.

4. D: Insert the handlebar post (32) to the post of front main frame (1), secure in place with screw (20) and arc washer (13) which are pre-attached to the Main Section.

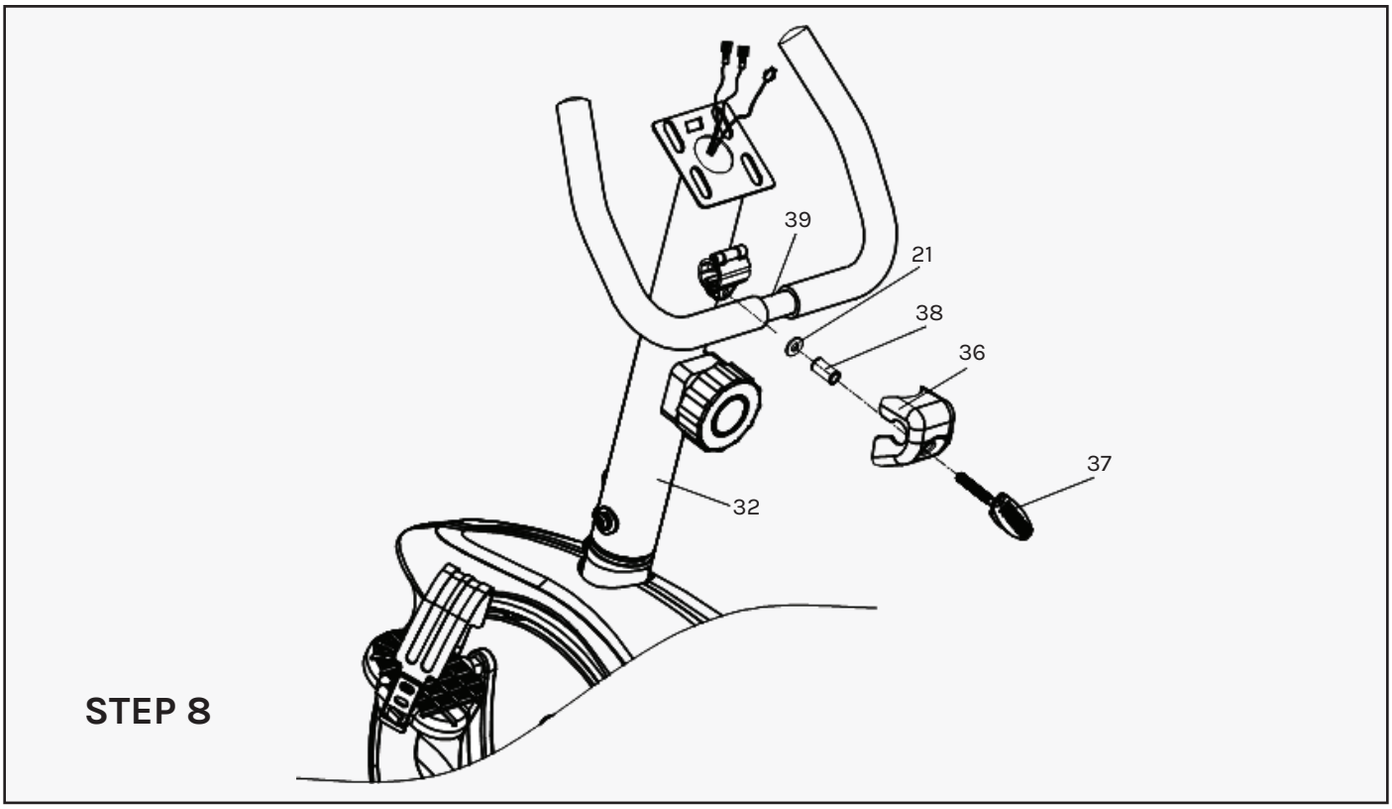

1. Lock the fixed handlebar (39) on the handlebar post (32) with the plastic handlebar screw (37), handlebar cover (36), flat washer (21) and spacer (38).

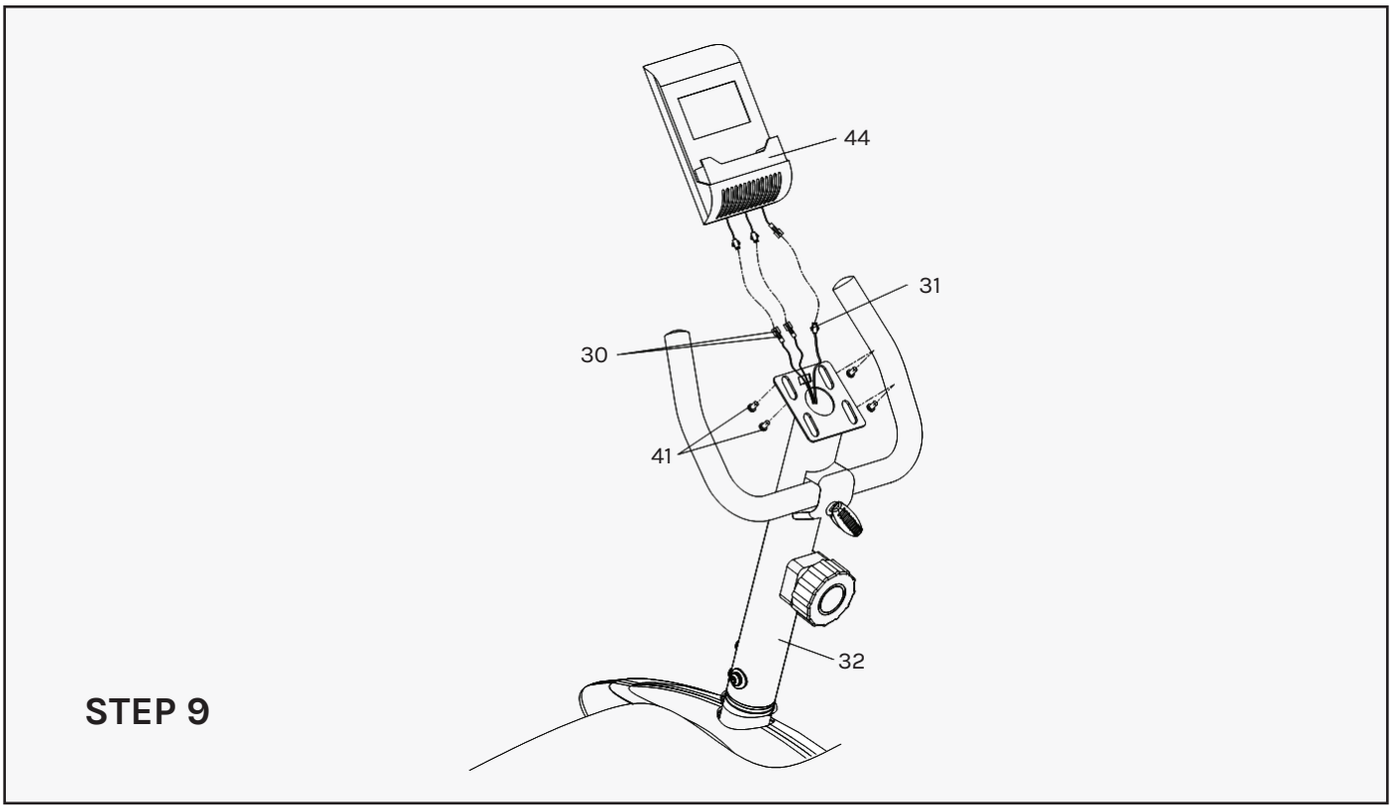

1. Connect the extension pulse wire 3 (30) and sensor wire (31) with the relevant cables of the computer (44),then lock the computer (44) on the bracket of the handlebar post (32) with screws (41).

VI. HOW TO GUIDE

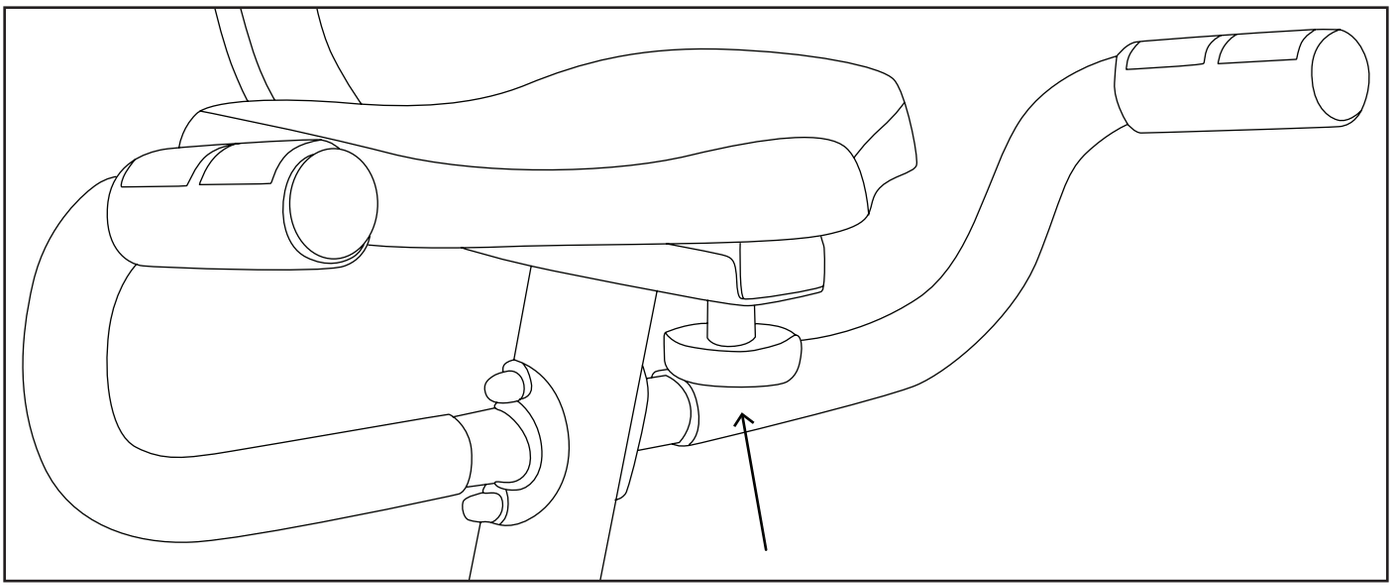

Adjusting the Horizontal Seat Position

1. Underneath the seat is a plum knob. To adjust the seat, loosen the plum knob and move the seat forward or backward to your preference. A good seating position should have your legs extended with a slight bend on the knees.
2. Once you have chosen your position tighten the plum knob.

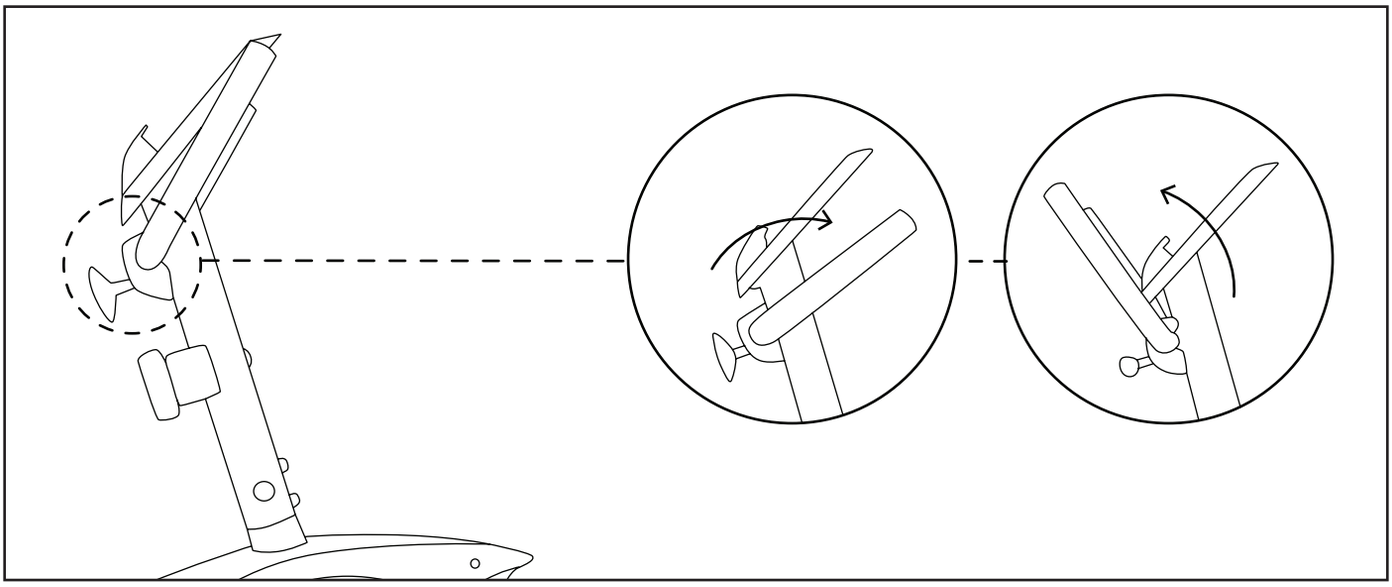

Adjusting the Front Handlebars

1. On the front handlebar is the Plastic handlebar screw. Loosen this screw and you can then move the handlebar up and down.
2. Once you have chosen your preferred position, re-tighten the screw.

VII. COMPUTER OPERATION

THE THINGS YOU SHOULD KNOW BEFORE EXERCISE:

1. USER DATA:

You should input your personal data before workout. Press BODY FAT key to enter your personal data of sex, age, height and weight then the computer can save the data unless take out the batteries.

2. CLOCK MODE:

a. The computer will enter the clock mode when there is no signal input or no keys be pressed after 4 minutes. You can press ENTER key to switch the clock and temperature at the clock mode or press other keys to quit the clock mode.

b. Press the ENTER button 2 seconds, reset the display, can adjust the time by UP or DOWN, use the ENTER key to select the next adjustment. If not adjust the time reset automatically after 30 seconds to start time.

FUNCTIONS AND FEATURES

1. CLOCK:

Display the current clock in hour and minute.

2. TEMPERATURE:

Display the current temperature.

3. TIME:

Shows your elapsed workout time in minutes and seconds. Your computer will automatically count up from 0:00 to 99:59 in one second intervals. You many also program your computer to count down from a set value by using the UP and DOWN keys from 0:00 to 99:00. If you continue exercising once the time has reached 0:00, the computer will begin beeping, and reset itself to the original time set, letting you know your workout is done.

4. SPEED:

Displays your workout speed value in KM/MILE per hour.

5. DISTANCE:

Displays the accumulative distance traveled during each workout up to a maximum of 999.9KM/MILE.

6. CALORIES:

Your computer will estimate the cumulative calories burned at any given time during your workout.

7. AGE:

Your computer is age-programmable from 10 to 99 years. If you do not set an age, this function will always default to age 35.

8. PULSE:

Your computer displays your pulse rate in beats per minute during your workout.

9. RPM:

Your pedal cadence.

10. SCAN:

As long as the start, the display will automatically scan Time, Distance, Calorie, Rpm, Pulse, Speed functions, each function will remain the main screen for 6 seconds.

11. PULSE RECOVERY:

During the START stage, leave the hands holding on grips or leave the chest transmitter attached and then press "PULSE RECOVERY" key, all function displays will stop except "TIME". Time starts counting from 01:00 - 00:59 - - to 00:00. As soon as 00:00 is reached, the computer will show your heart rate recovery status with the grade F1.0 to F6.0.

1.0	means	OUTSTANDING
1.0 < F < 2.0	means	EXCELLENT
2.0 ≦ F ≦ 2.9	means	GOOD
3.0 ≦ F ≦ 3.9	means	FAIR
4.0 ≦ F ≦ 5.9	means	BELOW AVERAGE

NOTE:

If no pulse signal input then the computer will show "P" on the PULSE window. If the computer shows "Err" on the message window, Keep your hands up in the induction sheet test after test, need to press the ENTER key, and then press the RECOVERY key.

KEY FUNCTION

There are 6 button keys and the function description as follows:

1. UP key:

During the setting mode, press the key to increase the value of Time, Distance, Calories, Age, Weight, Height etc. and to select sex. During the CLOCK mode, you can set up clock and alarm by this key.

2. DOWN key:

During the setting mode, press the key to decrease the value of Time, Distance, Calories, Age, Weight, Height etc. and to select sex. During the CLOCK mode, you can set up clock and alarm by this key.

3. ENTER/RESET key:

a. Press the key to accept the current data entry.

b. During the no speed mode, by holding this key for over 3 seconds then the computer will re-power on.

4. BODY FAT key:

Press the key to enter your personal data before measure your body fat ratio.

5. MEASURE key:

Press the key to get your body fat ratio and BMI and BMR.

a. FAT %: Indicate your body fat percentage after measurement.

b. BMI (Body Mass Index): BMI is a measure of body fat based on height and weight that applies to both adult men and women.

c. BMR (Basal Metabolic Rate): Your Basal Metabolic Rate (BMR) shows the number of calories your body needs to operate. This doesn't account for any activity, it's simply the energy needed to sustain a heartbeat, breathing and normal body temperature. It measures the body at rest, not sleep, at room temperature.

NOTE:

Press the MEASURE key, need to keep both hands on the holding sheet, after about 10 seconds will show the test result; if not in the hands holding the sheet, it will display "Err". Then according to the ENTER, UP, DOWN three is one of the key to exit the test results.

6. PULSE RECOVERY key:

Press the key to activate heart rate recovery function.

BATTERY

If improper display on monitor, please reinstall the batteries to have a good result.

VIII. EXERCISE GUIDE

! PLEASE NOTE:

Before beginning any exercise program, consult your physician. This is important especially if you are over the age of 45 or individuals with pre-existing health problems.

The pulse sensors are not medical devices. Various factors, including the user's movement, may affect the accuracy of heart rate readings. The pulse sensors are intended only as an exercise aid in determining heart rate trends in general.

Exercising is great way to control your weight, improving your fitness and reduce the effect of aging and stress. The key to success is to make exercise a regular and enjoyable part of your everyday life.

The condition of your heart and lungs and how efficient they are in delivering oxygen via your blood to your muscles is an important factor to your fitness. Your muscles use this oxygen to provide enough energy for daily activity. This is called aerobic activity. When you are fit, your heart will not have to work so hard. It will pump a lot fewer times per minute, reducing the wear and tear of your heart.

So as you can see, the fitter you are, the healthier and greater you will feel.

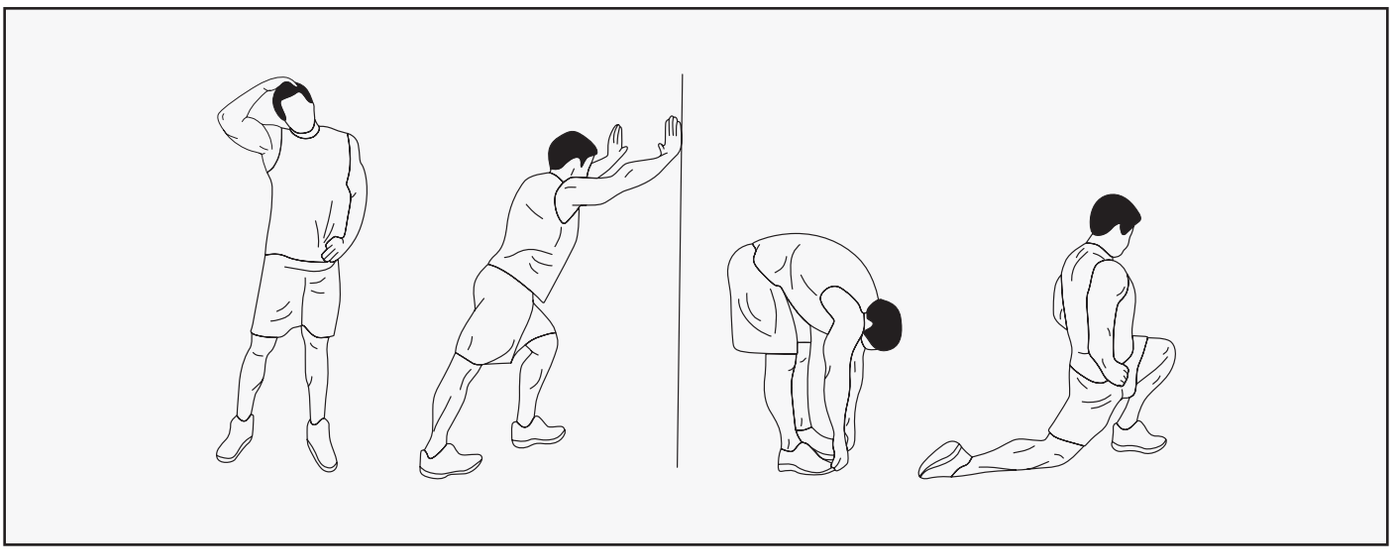

WARM UP

Start each workout with 5 to 10 minutes of stretching and some light exercises. A proper warm-up increases your body temperature, heart rate and circulation in preparation for exercise. Ease into your exercise.

After warming up, increase the intensity to your desired exercise program. Be sure to maintain your intensity for maximum performance. Breathe regularly and deeply as you exercise.

COOL DOWN

Finish each workout with a light jog or walk for at least 1 minute. Then complete 5 to 10 minutes of stretching to cool down. This will increase the flexibility of your muscles and will help prevent post-exercise problems.

WORKOUT GUIDELINES

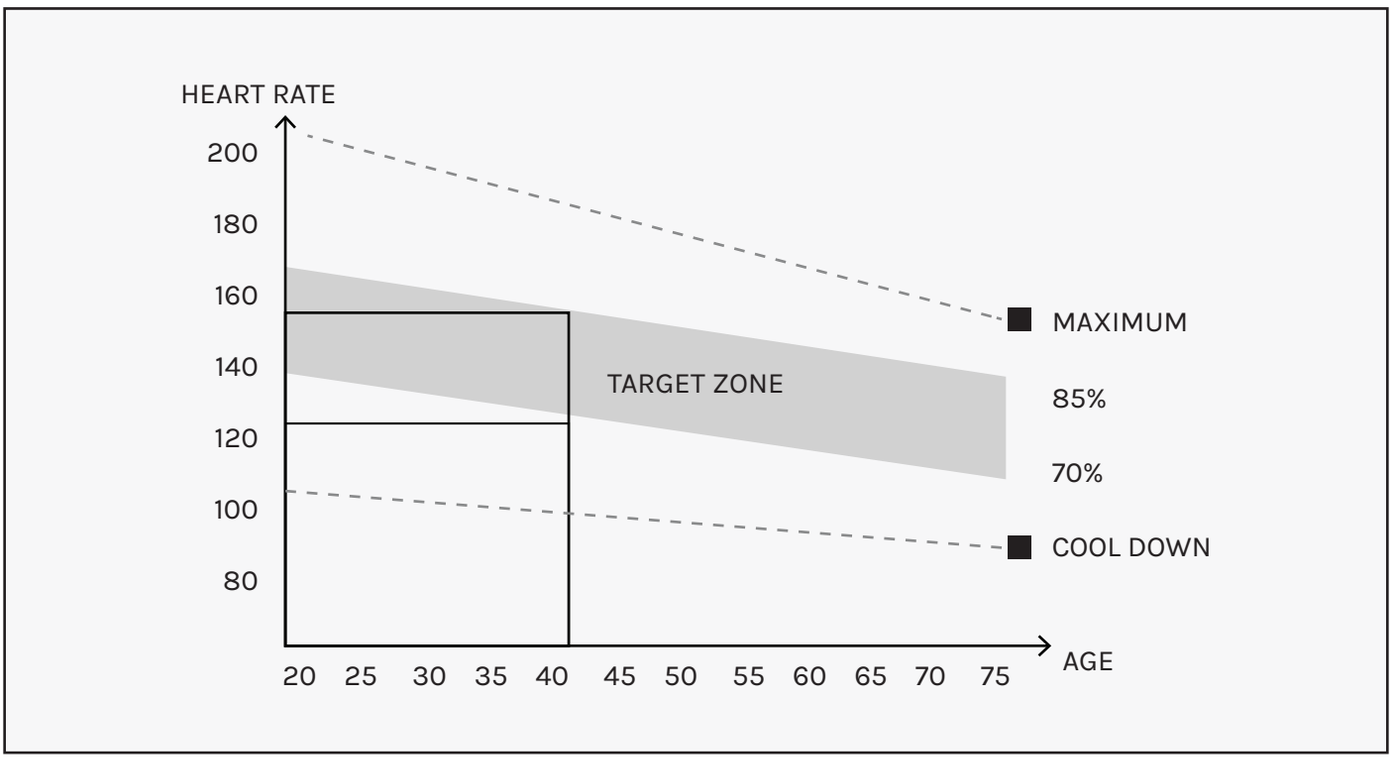

This is how your pulse should behave during general fitness exercise. Remember to warm up and cool down for a few minutes.

The most important factor here is the amount of effort you put in. The harder and longer you work, the more calories you will burn.

IX. WARRANTY

AUSTRALIAN CONSUMER LAW

Many of our products come with a guarantee or warranty from the manufacturer. In addition, they come with guarantees that cannot be excluded under the Australian Consumer Law. You are entitled to a replacement or refund for a major failure and compensation for any other reasonably foreseeable loss or damage.

You are entitled to have the goods repaired or replaced if the goods fail to be of acceptable quality and the failure does not amount to a major failure. Full details of your consumer rights may be found at **www.consumerlaw.gov.au**.

Please visit our website to view our full warranty terms and conditions:
http://www.lifespanfitness.com.au/warranty-repairs

WARRANTY AND SUPPORT

Please email us at **support@lifespanfitness.com.au** for all warranty or support issues.

For all warranty or support related enquiries, please lodge a support ticket first by sending us an email.

LSG

WWW.LSGFITNESS.COM.AU