SM-400 OWNER'S MANUAL

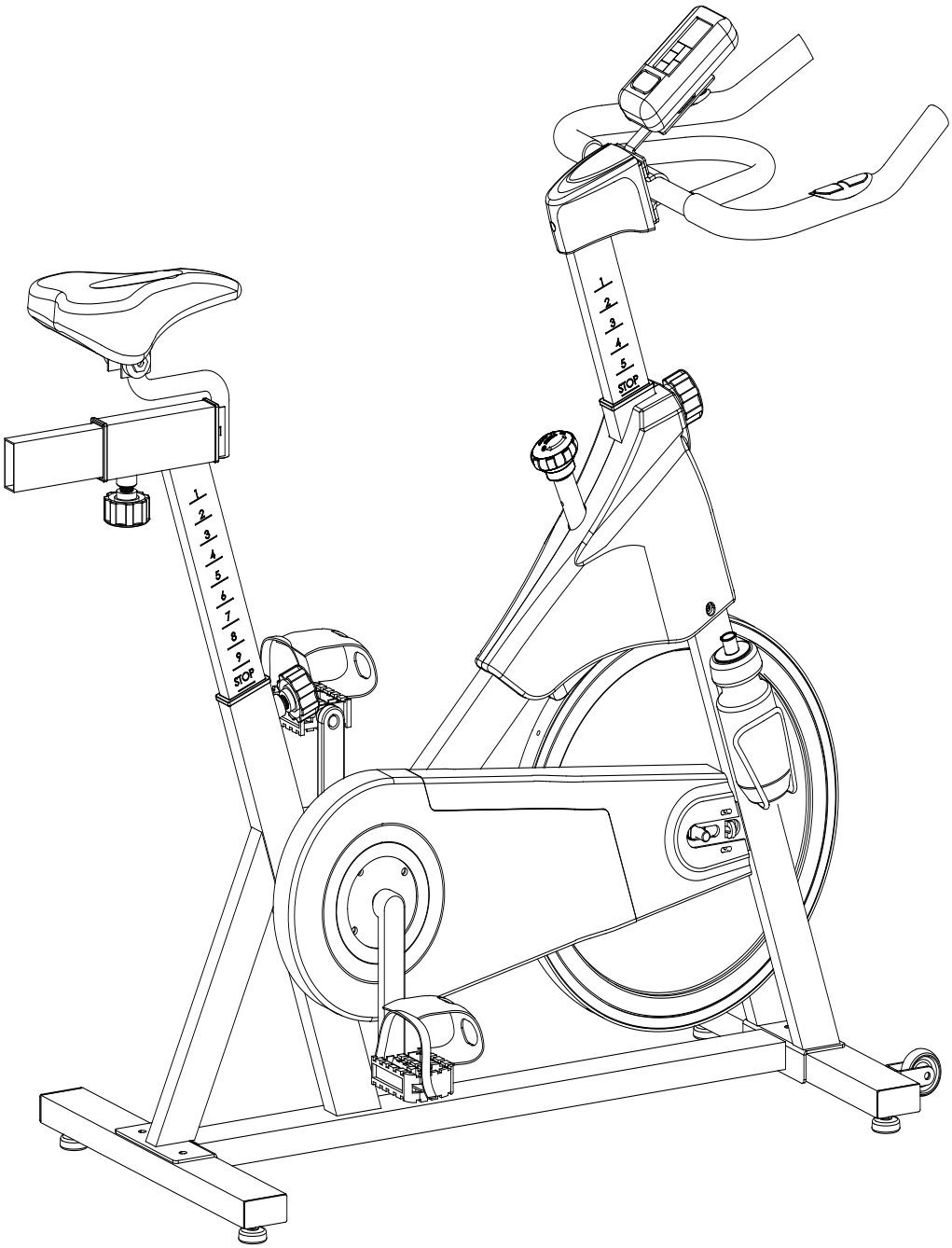

Product may vary slightly from the item pictured due to model upgrades

Read all instructions carefully before using this product. Retain this owner's manual for future reference.

NOTE: This manual may be subject to updates or changes. Up to date manuals are available through our website at www.lifespanfitness.com.au

TABLE OF CONTENTS

1. IMPORTANT SAFETY INSTRUCTIONS 3

2. CARE INSTRUCTIONS 4

3. EXPLODED DIAGRAM 5

4. PARTS LIST 7

5. ASSEMBLY INSTRUCTIONS 8

6. COMPUTER OPERATION 13

7. EXERCISE GUIDE 16

8. WARRANTY 18

1. IMPORTANT SAFETY INSTRUCTIONS

WARNING - Read all instructions before using this machine.

It is important your machine receives regular maintenance to prolong its useful life. Failing to regularly maintain your machine may void your warranty.

Please keep this manual with you at all times

a. It is important to read this entire manual before assembling and using the equipment. Safe and effective use can only be achieved if the equipment is assembled, maintained and used properly. Please note: It is your responsibility to ensure that all users of the equipment are informed of all warnings and precautions.

b. Before starting any exercise program you should consult your doctor to determine if you have any medical or physical conditions that could put your health and safety at risk, or prevent you from using the equipment properly. Your doctor's advice is essential if you are taking medication that affects your heart rate, blood pressure or cholesterol level.

c. Be aware of your body's signals. Incorrect or excessive exercise can damage your health. Stop exercising if you experience any of the following symptoms: pain, tightness in your chest, irregular heartbeat, and extreme shortness of breath, lightheadedness, dizziness or feelings of nausea. If you do experience any of these symptoms, you should consult your doctor before continuing with your exercise program.

d. Keep children and pets away from the equipment. This equipment is designed for adult use only.

e. Use the equipment on a solid, flat level surface with a protective cover for your floor or carpet. To ensure safety, the equipment should have at least 2 meters of free space around it.

f. Before using the equipment, check that the nuts and bolts are securely tightened. If you hear any unusual noises coming from the equipment during use and assembly, stop immediately. Do not use the equipment until the problem has been rectified.

g. Wear suitable clothing while using the equipment. Avoid wearing loose clothing that may get caught in the equipment or that may restrict or prevent movement.

h. This equipment is designed for indoor and family use only.

i. Care must be taken when lifting or moving the equipment so as not to injure your back.

j. Always keep this instruction manual and assembly tools at hand for reference.

k. The equipment is not suitable for therapeutic use.

l. The pulse or heart rate sensors are not medical devices. Various factors, including the user's movement, may affect the accuracy of heart rate readings. The pulse sensors are intended only as exercise aids in determining heart rate trends in general.

2. CARE INSTRUCTIONS

IMPORTANT

a. All nuts and bolts are to be checked and tightened on a regular basis. This includes pedals and other moving parts. **Failure to do so may cause damage to your threads and void your warranty.**

b. Lubricate moving joints after periods of usage

c. Be careful not to damage plastic or metal parts of the machine with heavy or sharp objects

d. The machine can be kept clean by wiping it down using dry cloth. Rust can appear if there is moisture. Clean and protect the steel with rust proof solution.

Battery Usage

a. Batteries are to be installed or replaced by adult only

b. Do not use rechargeable batteries. Do not mix different battery types. Do not mix old and new batteries. Do not mix alkaline, standard (Carbon-Zinc), or rechargeable (Nickel-Cadmium) batteries

c. Remove batteries when product is not in use

d. Remove exhausted batteries from product and dispose of in accordance with the manufacturer's recommendation

e. Do not attempt to recharge non-rechargeable batteries

f. Batteries are to be inserted with correct polarity

g. The supply terminals are not to be short-circuited

h. Do not dispose of batteries in fire, batteries may explode or leak

3. EXPLODED DIAGRAM

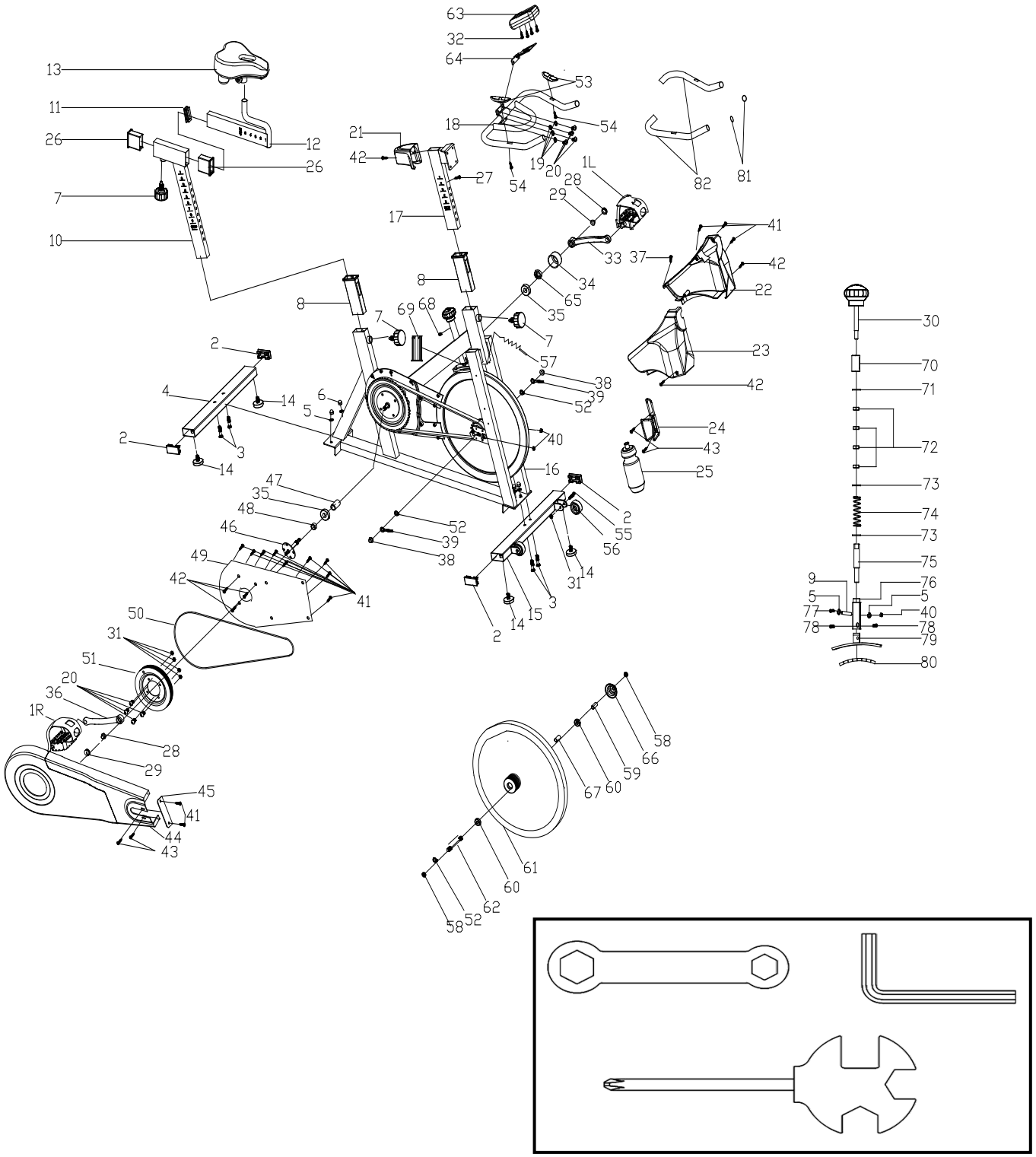

4. PARTS LIST

NO	NAME	QUANTITY	SPEC
1	PEDAL	1	JD-301（9/16"）
2	END CAP1	5	60*30*1.5
3	CARRIAGE BOLT	4	GB/T 12-1988 M8*42
4	REAR STABILIZER	1	WELDING
5	FLAT WASHER	6	GB/T 95-2002 8
6	DOMED NUT	4	GB/T 802-1988 M8
7	SPRING ADJUSTMENT KNOB	3	φ57*62 (M16*1.5)
8	PLASTIC SLEEVE	2	53.5*23.5*1.5 60*30*1.5
9	The trachea	1	φ7.5*φ6*28
10	VERTICAL SEAT POST	1	WELDING
11	END CAP2	1	53.5*23.5*1.5
12	SEAT POST	1	WELDING
13	SEAT	1	DD-6619
14	STOPPER	4	φ32*37/(M8X25)
15	FRONT STABILIZER	1	WELDING
16	MAIN FRAME	1	WELDING
17	HANDLEBAR POST	1	WELDING
18	HANDLE BAR	1	WELDING
19	SPRING WASHER	4	GB/T 859-1987 8
20	BOLT	8	GB/T 70.2-2000 M8*16
21	HANDLEBAR COVER	1	115*89*75 (60g)
22	LEFT PROTECT COVER	1	330*82*258 (110g)
23	RIGHT PROTECT COVER	1	330*83*258 (110g)
24	B0TTLE HOLDER	1	φ6
25	B0TTLE	1	XS-003(1#) 500ML
26	PLASTIC SLEEVE1	2	53.5*23.5*1.5 60*30*1.5
27	SCREW 6	1	GB/845-85 ST4.8X13
28	FIXING NUT 1	2	GB/T 6177.2-2000 M10*1.25
29	CRANK END CAP	2	φ23*7.5
30	KNOB	1	φ60*113
31	LOCK NUT	6	GB/T 889.1-2000 M8
32	SCREW 4	4	GB/T 5780-2000 M5*10
33	LEFT CRANK	1	170*27 （9/16"）
34	CRANK COVER	1	φ56*28
35	BEARING	2	6004ZZ
36	RIGHT CRANK	1	170*27 （9/16"）
37	SCREW 4	1	ST2.9*9.5
38	FIXING NUT 2	2	GB/T 802-1988 M12X1.25
39	FIXING BOLT	2	M6*54
40	NUT	3	GB/T 889.1-2000 M6
41	SCREW 1	14	GB/T 845-1985 ST4.2*19

NO	NAME	QUANTITY	SPEC
42	SCREW 2	5	GB/T 15856.1-2002 ST4.2X19
43	SCREW 3	4	GB/845-85 ST4.8X13
44	OUTER CHAIN COVER	1	654*263*49 (507g)
45	LITTLE CHAIN COVER	1	108*37*3 (7g)
46	AXIS	1	φ20*162
47	LONG FIXING TUBE	1	φ25*φ20.2*41.2
48	SHORT FIXING TUBE	1	φ25*φ20.5*9
49	INNER CHAIN COVER	1	395*259*2.5 (250g)
50	BELT	1	5PK
51	BELT WHEEL	1	φ200*24
52	FLAT WASHER	3	GB/T 95-2002 12
53	PULSE	2	
54	SCREW 5	2	GB/845-85 ST4.2X25
55	BOLT	2	GB/T 5780-2000 M8*40
56	WHEEL	2	φ50*23
57	SENSOR	1	SR-202 45mm
58	FIXING NUT 2	2	M12X1.25 H=6
59	FIXING TUBE	1	φ16*φ12.1*35
60	BEARING	2	6001ZZ
61	FLYWHEEL	1	φ453*29 (18KG)
62	FLYWHEEL SHAFT	1	φ12*160
63	COMPUTER	1	ST-6527(ST-7607)
64	COMPUTER HOLDER	1	δ2.5
65	NUT	1	M20*1.0
66	FLYWHEEL COVER	1	φ59*35
67	FIXING TUBE	1	φ16*φ12.2*56.5
68	BOLT 1	1	GB/T77-2007 M6*6
69	The brake guide sleeve	1	18*18*1.2 25*25*1.5
70	Twist The Fixings	1	φ20*34
71	WASHER 2	1	M10
72	NUT	4	GB/T 41-2000 M10
73	WASHER 2	2	φ20*φ14*2.0
74	SPRING 1	1	18*62
75	Screw rod	1	φ13.5*80
76	The brake connection assembly	1	WELDING
77	BOLT1	1	GB/T 70.1-2000 M6*35
78	BOLT1	2	GB/T 70.1-2000 M6*12
79	The brake block assembly	1	WELDING
80	High magnetic	8	28*20*10
81	END CAP	2	φ25*1.5
82	FOAM GRIP	2	φ23*φ29*465

5. ASSEMBLY INSTRUCTIONS

NOTE: Before assembly ensure there is enough space around the item. Some nuts and bolts may be already attached to the machine

STEP 1

a) Attach the Front Stabilizer (15) to the Main Frame (16) using two sets of Ø8 Flat Washers (5), M8 Domed Nut (6) and M8*42 Carriage bolt (3).

b) Attach the Rear Stabilizer (4) to the Main Frame (16) using two sets of Ø8 Flat Washers (5), M8 Domed Nut (6) and M8*42 Carriage bolt (3). Use screw (43) to fix bottle holder (24) to the Main frame (16). Then place the bottle (pt25) into the bottle holder.

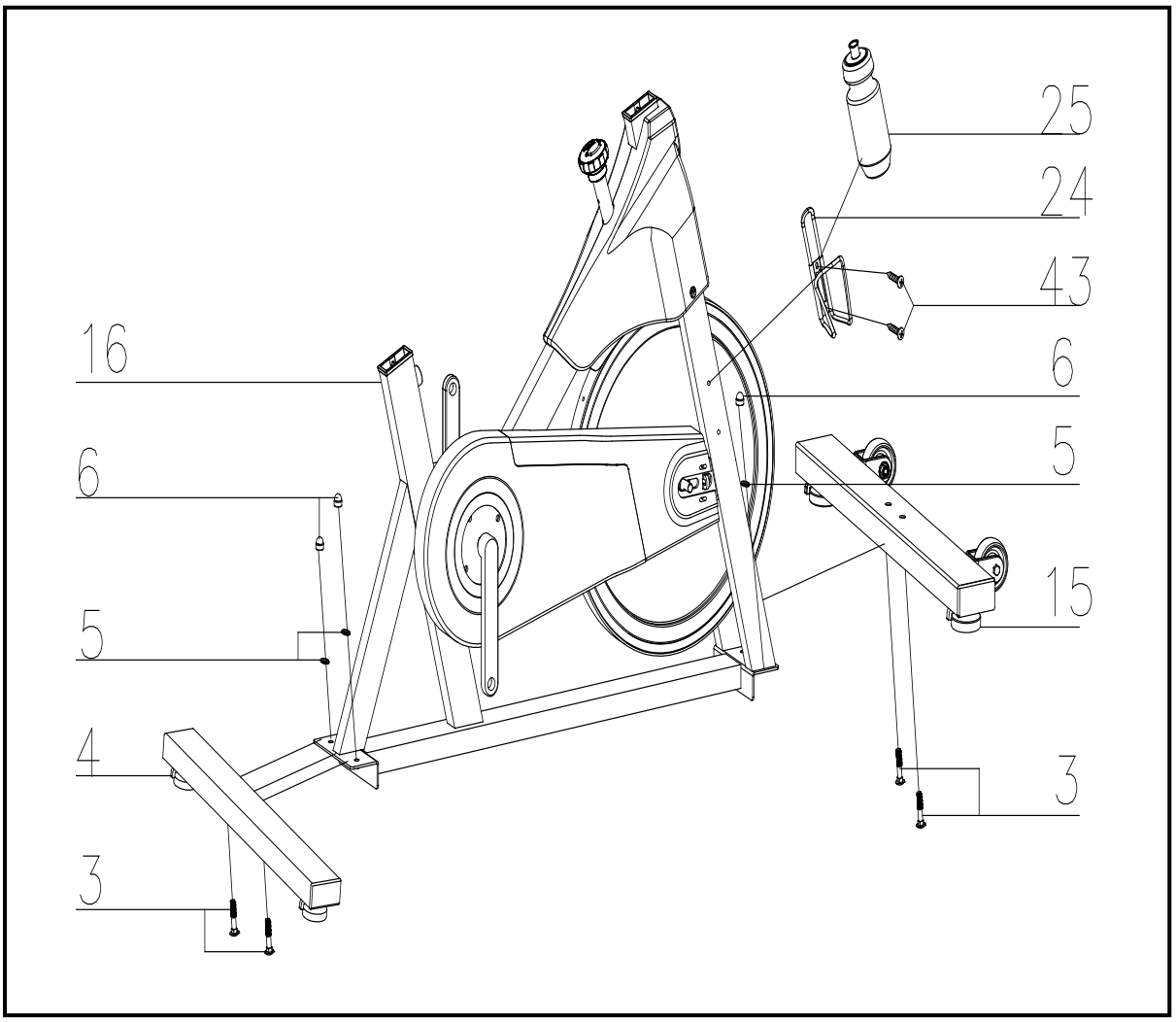

STEP 2:

a) Slide the Vertical Seat Post (10) into the seat post housing on the main frame (16). Then slide the Seat Post (12) into the Vertical Seat Post (10). You will have to loosen the Spring Adjustment Knob (7) and then pull the knob back to adjust the seat height. Release the knob and retighten the knurled portion.

b) Fix the Seat (13) to the Vertical Seat Post (12) as shown and tighten the bolts around the screws under the seat.

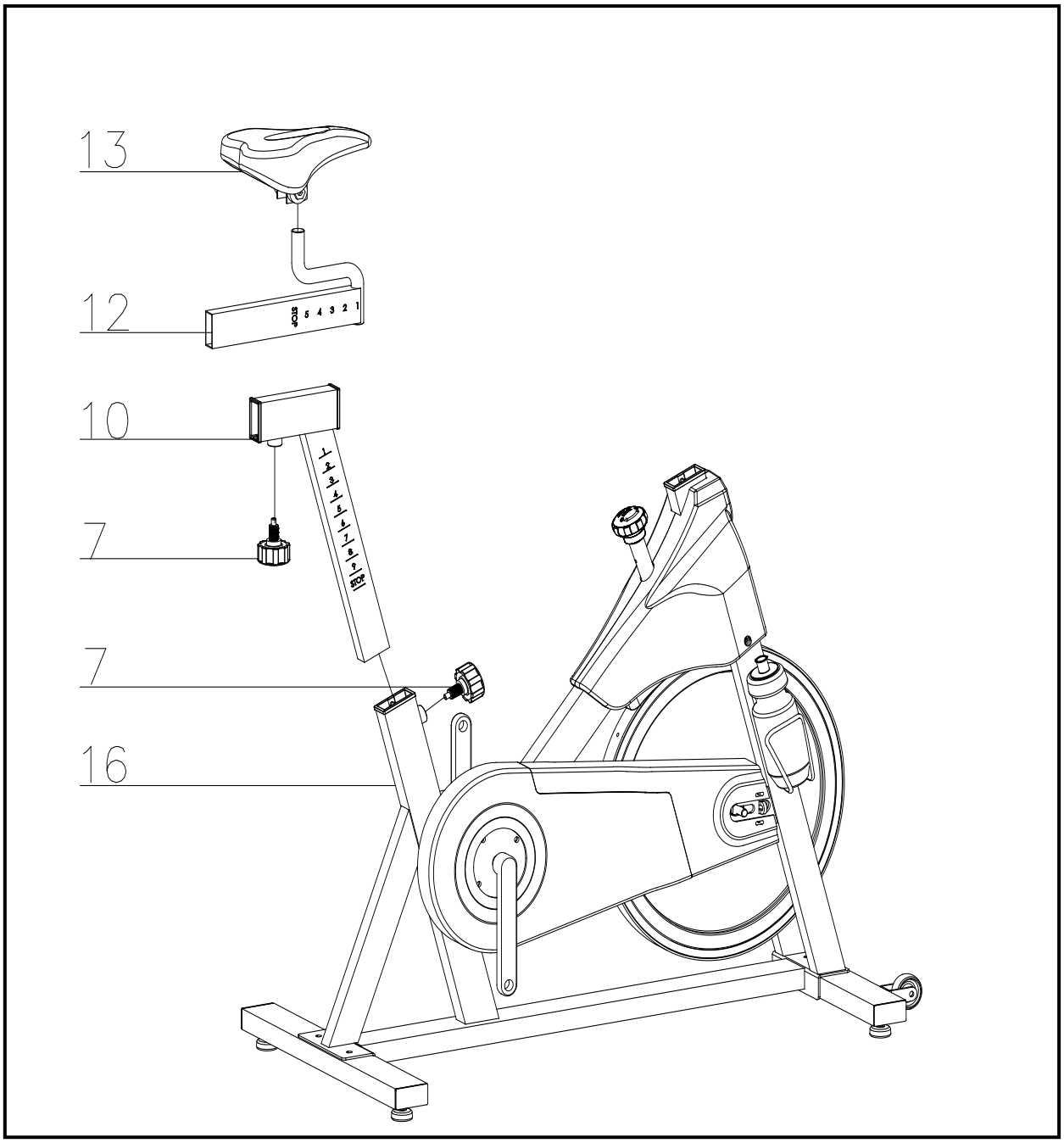

STEP 3:

a) Slide the Handlebar Post (17) into the handlebar post housing on the main frame. Use the Spring Adjustment Knob (7) to set post height and to secure the handlebars.

b) Remove the bolts and spring washer from the Handlebar Post (17) then fix the Handlebar (18) with 4pcs Ø8 the Spring Washer (19) and M8*15 Bolt (20).

Note: Ensure the handlebars are secured firmly in the housing.

c) Slide the Computer (63) onto the Computer Holder (64) and connect the plug (A1&A2),

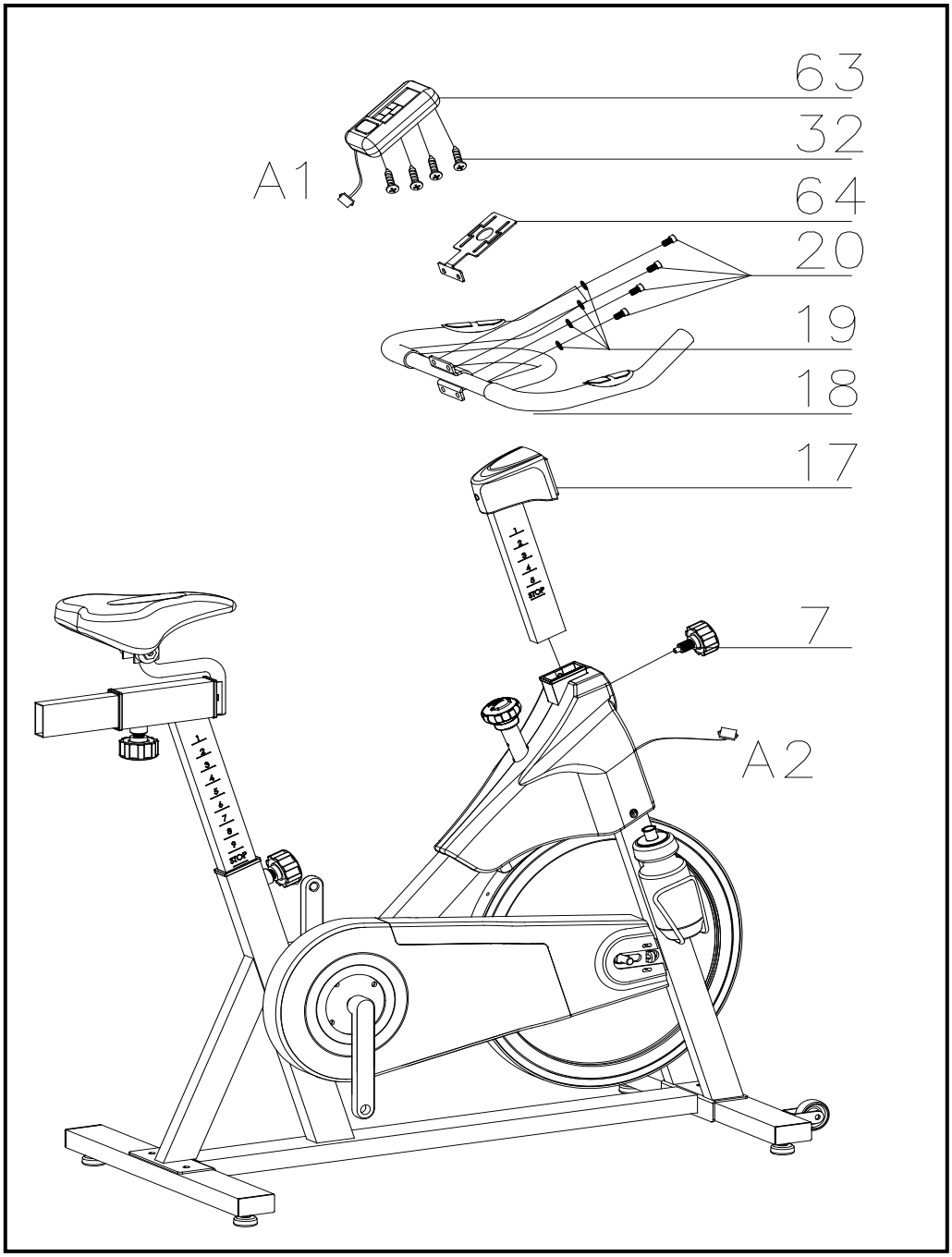

STEP 4:

a) The Pedals (1 L & 1 R) are marked "L" and "R" - Left and Right.

b) Connect them to their appropriate crank arms. The right crank arm is on the right- hand side of the cycle as you sit on it.

Note that the Right pedal should be threaded in clockwise and the Left pedal anticlockwise.

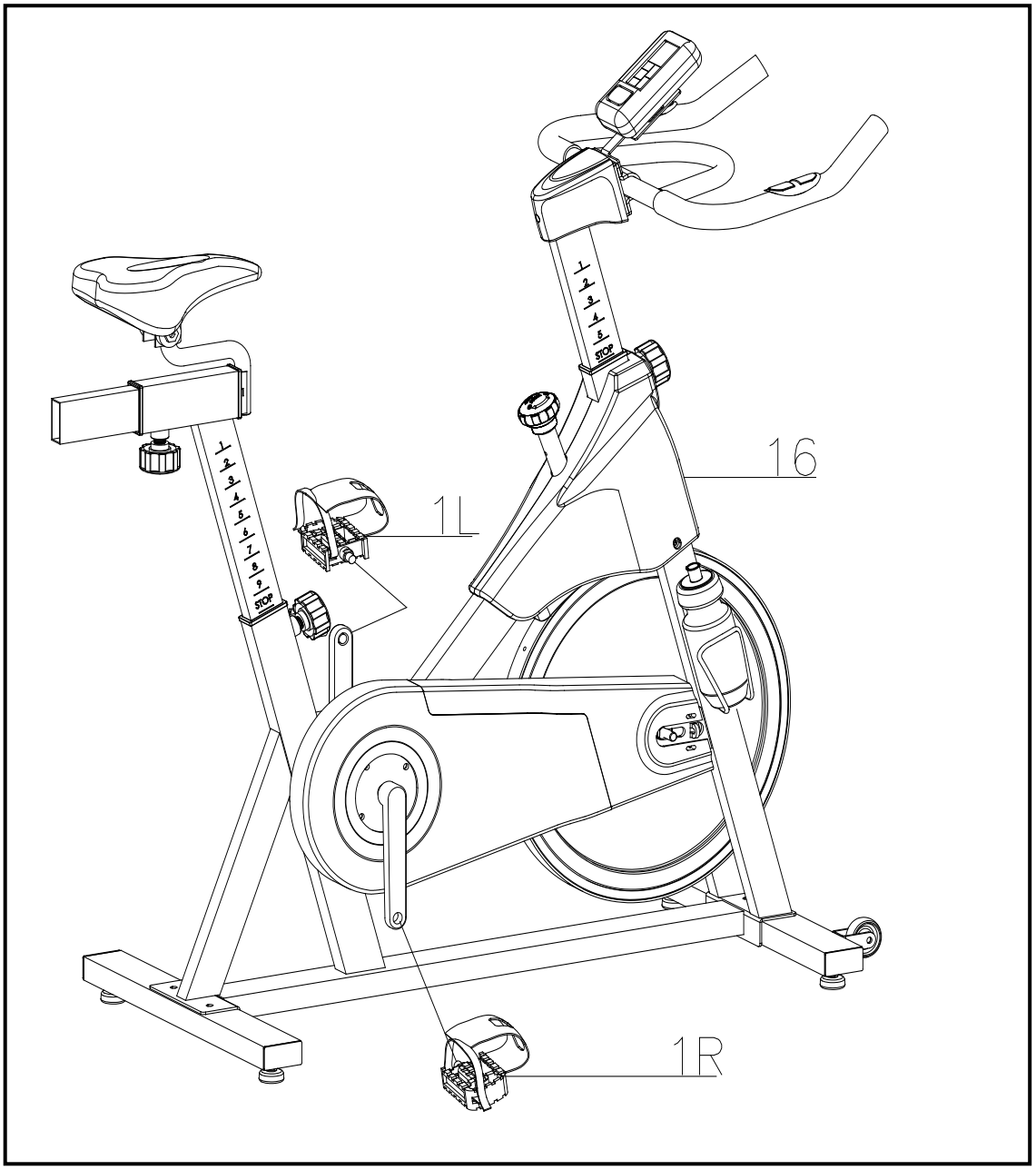

Adjusting the Tension:

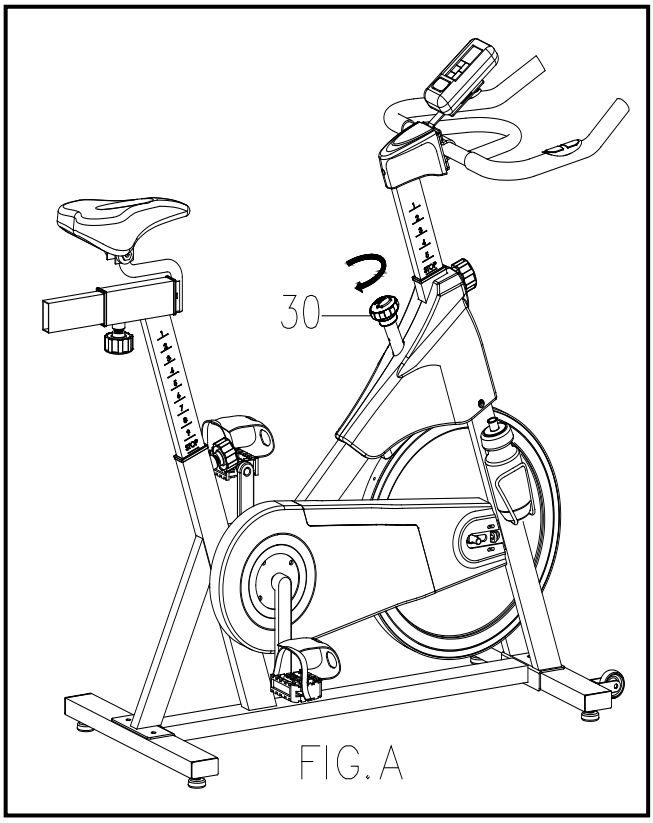

Increasing or decreasing the tension allows you to add variety to your workout sessions by adjusting the resistance level of the bike.

To **increase** tension and increase resistance (requiring more strength to pedal), turn the Emergency Brake & Tension Control Knob (#52) to the right.

To **decrease** tension and Decrease resistance (requiring less strength to pedal), turn the Emergency Brake & Tension Control Knob (#52) to the left.

Using the Emergency Brake:

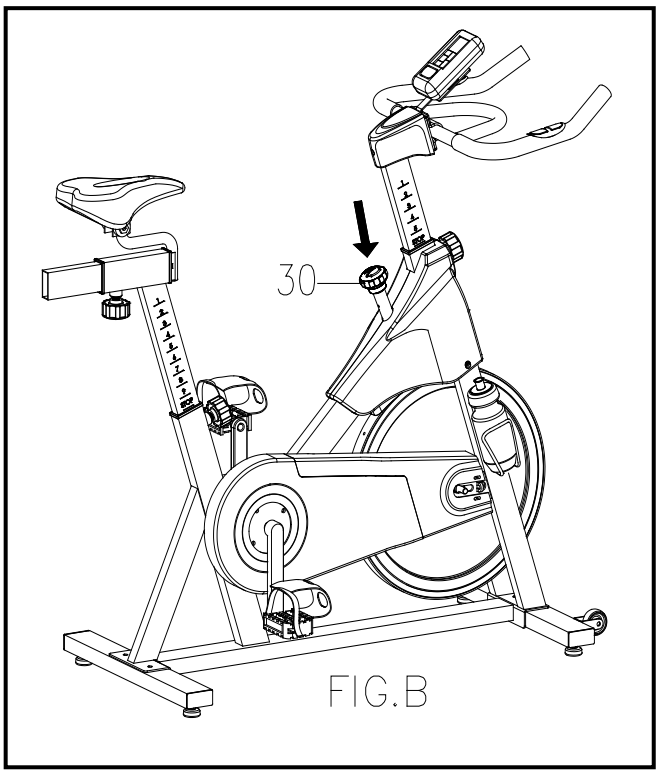

The same knob that allows you to adjust the tension of the bike also doubles as the Emergency Brake. Use this safety feature in any situation where you would need to get off the bike and/or stop the bike's flywheel.

To use the Emergency Brake function in any situation you would need it in, firmly press down on the *Emergency Brake & Brake Control Knob (#30)*.

6. COMPUTER OPERATION

BUTTONS:

1. MODE:
    a. Press "Mode" for selection, or enter after setup.
2. SET:
    a. Press to set value of TIME, DISTANCE, CALORIES and PULSE.
3. RESET
    a. Press to reset a particular function. Hold for down for 2 seconds for a full reset. Placing the batteries will also result in a full reset.
4. RECOVERY
    a. Heart rate recovery function after workout.

FUNCTIONS:

1. SCAN
    a. Displays all functions from RPM - SPEED - DISTANCE - CALORIES - PULSE
2. RPM
    a. Revolutions per minute. The display will cycle between RPM and SPEED every 6 seconds.
3. SPEED
    a. Displays current speed with a maximum speed of 99.9km/h
4. TIME
    a. Count up – No pre-set target. Time will count up to a maximum of 99:59 in 1 second increments.
    b. Count down – Pre-set target. Time will count down from the pre-set figure to 00:00. The pre-set value can be set between 01:00 to 99:00.
5. DISTANCE
    a. Accumulates total distance from 0:00 to 99:99 km. The user may pre-set the target distance by pressing SET button.
6. CALORIE
    a. Accumulates calories consumed from 0 to 9999 calories.
7. PULSE
    a. PULSE can be pre-set using the SET button

OPERATION:

1. Install Batteries
   a. Install 2 x 1.5V AAA batteries. The screen will display as per (Figure 1). It will then enter standby mode (Figure 2).

Figure 1

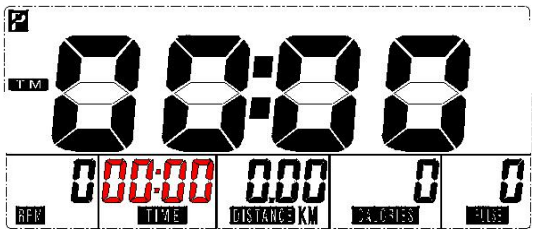

Figure 2

2. Set Target Figures for TIME, DISTANCE or CALORIES
   a. When the desired figure is blinking, press SET to adjust the value. To skip to another figure, press MODE. You can also set the target RPM figure.

3. SCAN MODE
   a. Once all values are set, the display will enter SCAN mode upon commencement of your workout. In scan mode the display will cycle between RPM, SPEED, TIME, DISTANCE, CALORIES, PULSE every 6 seconds.
   b. To stop the display from auto cycling between values, press the MODE button. This will prevent all value excluding RPM and SPEED from auto cycling.
4. REACHING THE PRESET TARGET
   a. If you have entered a target figure, the display will beep for 8 seconds once the countdown reaches 0.
   b. If you continue your workout after the target is reached, the display will start counting up from 0 as per a regular workout.

5. RECOVERY
   a. Press the RECOVERY button to enable the recovery mode.
   b. In recovery mode only pulse and time will be available.
   c. TIME will count down from 00:60 and the pulse window will display the user's pulse. Upon reaching 0, your performance will be rated between F1 and F6.

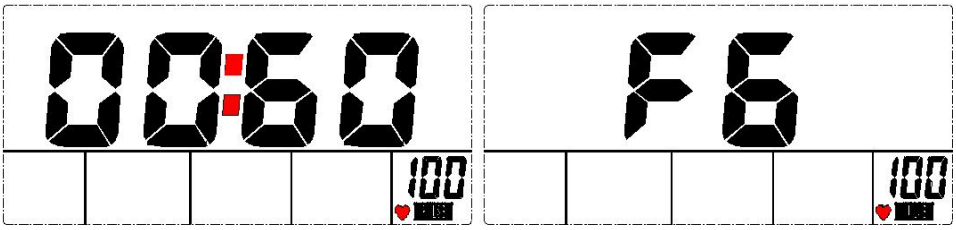

F1	Outstanding
F2	Excellent
F3	Above Average
F4	Average
F5	Below Average
F6	Poor

   d. If the countdown does not reach 00:00, and no pulse input is detected, F6 will be displayed.
   e. If you press RECOVERY prior to count down reaching 00:00 the recovery function will end.

NOTE

1. After being inactive for 4 minutes, the main screen will turn off and will display the clock automatically.
2. If the computer displays abnormally, please re-install the battery and try again.

Battery Spec: 1.5V UM-4 or AAA (2PCS).

7. EXERCISE GUIDE

PLEASE NOTE: Before beginning any exercise program, consult your physician. This is important especially if you are over the age of 45 or individuals with pre-existing health problems.

The pulse sensors are not medical devices. Various factors, including the user's movement, may affect the accuracy of heart rate readings. The pulse sensors are intended only as an exercise aid in determining heart rate trends in general.

Exercising is great way to control your weight, improving your fitness and reduce the effect of aging and stress. The key to success is to make exercise a regular and enjoyable part of your everyday life.
The condition of your heart and lungs and how efficient they are in delivering oxygen via your blood to your muscles is an important factor to your fitness. Your muscles use this oxygen to provide enough energy for daily activity. This is called aerobic activity. When you are fit, your heart will not have to work so hard. It will pump a lot fewer times per minute, reducing the wear and tear of your heart.
So as you can see, the fitter you are, the healthier and greater you will feel.

Warm-up

Start each workout with 5 to 10 minutes of stretching and some light exercises. A proper warm-up increases your body temperature, heart rate and circulation in preparation for exercise. Ease into your exercise.

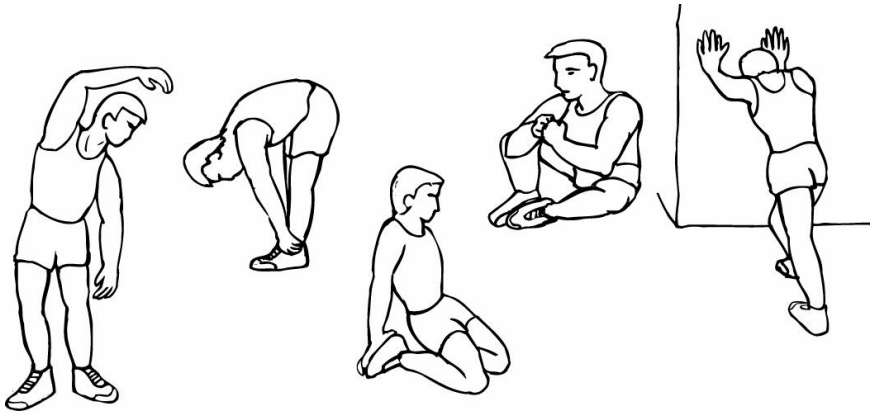

Training Zone Exercise

After warming up, increase the intensity to your desired exercise program. Be sure to maintain your intensity for maximum performance. Breathe regularly and deeply as you exercise.

Cool Down

Finish each workout with a light jog or walk for at least 1 minute. Then complete 5 to 10 minutes of stretching to cool down. This will increase the flexibility of your muscles and will help prevent post-exercise problems.

Workout Guidelines

TARGET ZONE

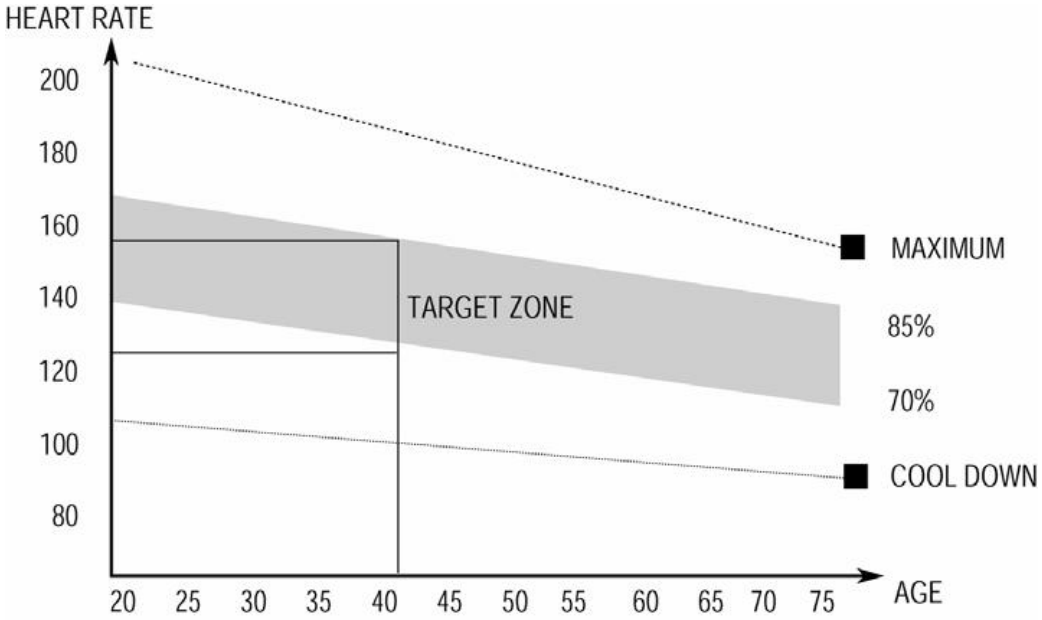

This is how your pulse should behave during general fitness exercise. Remember to warm up and cool down for a few minutes.

8. WARRANTY

AUSTRALIAN CONSUMER LAW

Many of our products come with a guarantee or warranty from the manufacturer. In addition, they come with guarantees that cannot be excluded under the Australian Consumer Law. You are entitled to a replacement or refund for a major failure and compensation for any other reasonably foreseeable loss or damage.

You are entitled to have the goods repaired or replaced if the goods fail to be of acceptable quality and the failure does not amount to a major failure. Full details of your consumer rights may be found at www.consumerlaw.gov.au

Please visit our website to view our full warranty terms and conditions:

http://www.lifespanfitness.com.au/warranty-repairs

Warranty and Support:

Please email us at support@lifespanfitness.com.au for all warranty or support issues.

For all warranty or support related enquiries an email must be sent before contacting us via any other means.

Hand Pulse Technology

This product comes equipped with hand pulse sensors which are used to pick up tiny EKG/ECG signals that run through the body when your heart beats. These electrical EKG/ECG signals are very small and that they must be amplified 1000 times to make the signal useful for the computer to display your pulse.

To ensure proper operation:

- The user must maintain good, consistent contact on all four sensors
- The users skin cannot be too dry or too wet

Other factors that could affect the reading:

- Change of grip on the sensors (during slow pace walking and up to running)
- Tightening of hand muscles will produce small electrical signals
- Static electricity charges from the air or from walking on the treadmill

EKG/ECG Sensors may filter through actual EKG/ECG signals and "Noise" factors that may affect the reading. This will cause the pulse reading to be delayed and will take longer to update the display as the heart rate changes. Too much noise will create an incorrect reading. Medical conditions or having no electrical signal in the hands are other factors that may affect pulse readings as well.

These are limitations of hand pulse technology and even the most expensive systems (which can cost upwards of $3,000) used in hospitals have the same problems. The difference is that a patient in a hospital is not running on a treadmill. Hand pulse technology works well on stationary exercise machines like bikes and even elliptical cross trainers but are not perfect on a treadmill. We offer treadmills with a wireless heart rate receiver which may be a more accurate option.

To test if your hand pulse sensors are working up to specification, hold them while standing on the side step rails, not walking, and see if the reading is more in line with what you would expect. This will eliminate the movement and static electricity factors. If your hands are dry, then wet them slightly (saliva works as a great conductor if this doesn't bother you).

For more information, please contact our Lifespan Fitness Technical Support Department
www.lifespanfitness.com.au
support@lifespanfitness.com.au