Delta 1.1 Treadmill

USER MANUAL

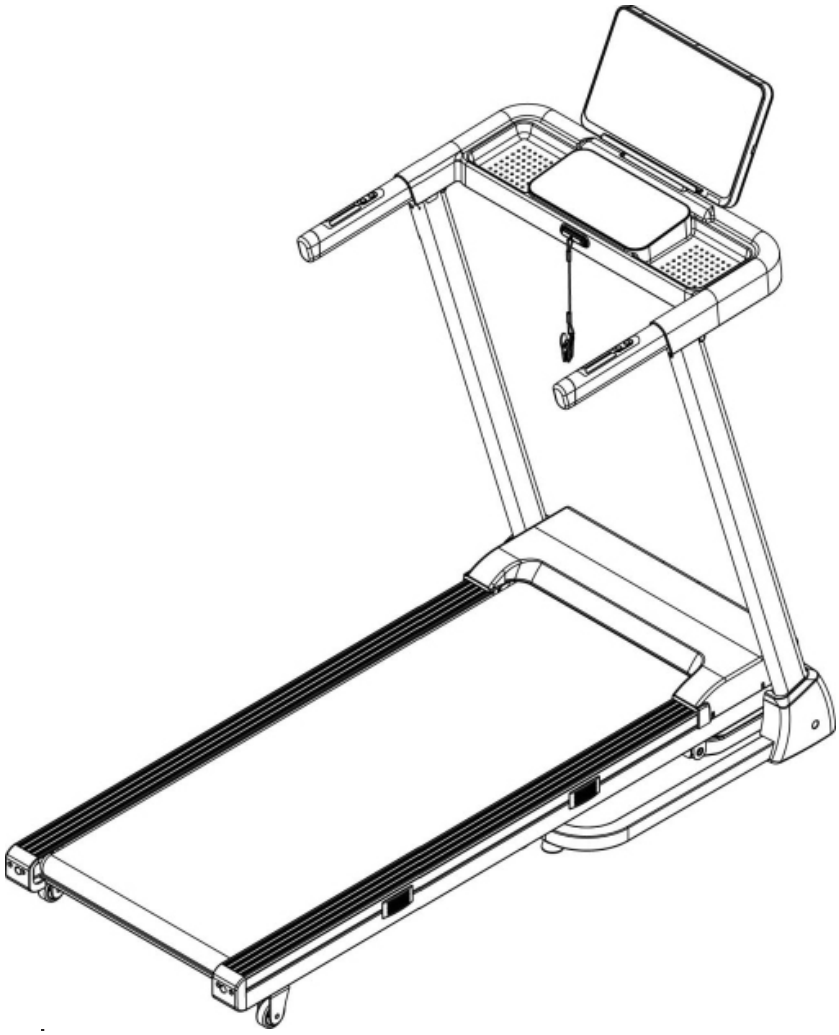

Find the Digital Manual Online

Product may vary slightly from the item pictured due to model upgrades.

Read all instructions carefully before using this product. Retain this owner's manual for future reference.

NOTE:

This manual should not be used to guide your purchasing decision. Your product, and the contents inside its carton, may vary from what is listed in this manual. This manual may also be subject to updates or changes. Updated manuals are available through our website at www.lifespanfitness.com.au

TABLE OF CONTENTS

I. Important Safety Instructions 03

II. Important Electrical Information 05

III. Important Operating Instructions 06

IV. Assembly Instructions 07

VI. Folding and Unfolding 11

VII. Operation Guide 12

VIII. Maintenance Guide 17

IX. Exploded Diagram 19

X. Parts List 20

XI. Exercise Guide 22

XII. Warranty 24

XIII. Hand Pulse Technology..... 25

I. IMPORTANT SAFETY INSTRUCTIONS

⚠ WARNING: Read all instructions before using this treadmill.

It is important your treadmill receives regular maintenance to prolong its useful life. Failing to regularly maintain your treadmill may void your warranty.

⚠ DANGER

To reduce the risk of electric shock disconnect your treadmill from the electrical outlet prior to cleaning and/or service work.

DO NOT USE AN EXTENSION CORD:

DO NOT ATTEMPT TO DISABLE THE GROUNDED PLUG BY USING IMPROPER ADAPTERS OR IN ANY WAY MODIFY THE CORD SET.

1) Install the treadmill on a flat level surface with access to correct voltage and frequency, grounded outlet.

2) Do not operate treadmill on deeply padded, plush or shag carpet. Damage to both carpet and treadmill may result.

3) Do not block the rear of the treadmill. Provide a minimum of 1 meter clearance between the rear of the treadmill and any fixed object.

4) Place your unit on a solid, level surface when in use.

5) Never allow children on or near the treadmill.

6) When running, make sure the plastic clip is fastened on your clothing. It is for your safety, should you fall or move too far back on the treadmill.

7) Keep hands away from all moving parts.

8) Never operate the treadmill if it has a damaged cord or plug.

9) Keep the cord away from heated surfaces.

10) Do not operate where aerosol spray products are being used or where oxygen is being administered. Sparks from the motor may ignite a highly flammable environment.

11) Never drop or insert any object into any openings.

12) The treadmill is intended for in-home use only and not suitable for long time running.

13) To disconnect, turn all controls to the off position, remove the safety key, and then remove the plug from the outlet.

14) The pulse sensors are not medical devices. Various factors, including the user's movement, may affect the accuracy of heart rate readings. The pulse sensors are intended only as exercise aids in determining heart rate trends in general.

15) Use handrails provided; they are for your safety.

16) Wear proper shoes. High heels, dress shoes, sandals or bare feet are not suitable for use on your treadmill. Quality athletic shoes are recommended to avoid leg fatigue.

17) Allowed temperature: 5 to 40 degrees.

! Remove the safety key after use to prevent unauthorized treadmill operation.

II. IMPORTANT ELECTRICAL INFORMATION

⚠ WARNING!

1) **NEVER** use a ground fault circuit interrupt (GFCI) wall outlet with this treadmill. Route the power cord away from any moving part of the treadmill including the elevation mechanism and transport wheels.

2) **NEVER** operate treadmill on Generator or UPS power supply.

3) **NEVER** remove any cover without first disconnecting AC power.

4) **NEVER** expose this treadmill to rain or moisture. This treadmill is not designed for use outdoors, near a pool, or in any other high humidity environment.

⚠ WARNING!

This treadmill requires a right power source to properly operate. For your safety, as well as the safety of others, please verify that the power source is correct before plugging the equipment. Any incorrect power source could cause significant damage to the equipment and or user.

GROUNDING METHODS

This product must be grounded. Grounding provides the least resistance for electrical current and will reduce the risk of electric shock. The plug must be plugged into an appropriate outlet that is properly installed and grounded in accordance with all local codes and ordinances. Ensure that the product is connected to an outlet which contains the same configuration as the plug. Do not use an adaptor for this product.

This product is for use on a nominal circuit and has a grounding plug that looks like the plug illustrated in sketch A. Make sure that the product is connected to an outlet having the same configuration as the plug. No adapter should be used with this product.

⚠ WARNING!

1. NEVER use a ground fault circuit interrupt (GFCI) wall outlet with this treadmill. Route the power cord away from any moving part of the treadmill including the elevation mechanism and transport wheels.

2. NEVER operate the treadmill using a generator or UPS power supply.

3. NEVER remove any cover without first disconnecting power.

4. NEVER expose the treadmill to rain or moisture. This treadmill is not designed for use outdoors, near pools or in any other high humidity environment.

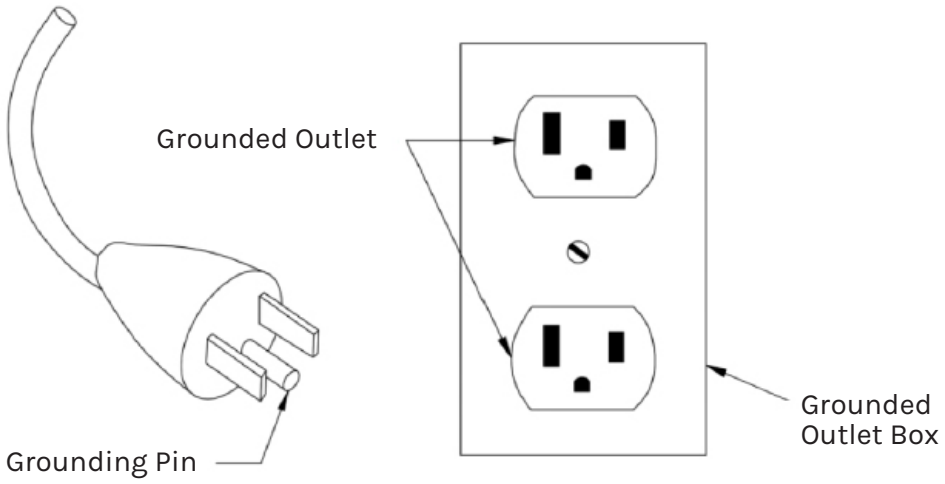

III. IMPORTANT OPERATING INSTRUCTIONS

1) Insert the power plug into the socket directly.

2) The constant running time is less than 2 hours. Be sure to read the entire manual before operating your machine.

3) Understand that changes in speed and incline do not occur immediately. Set your desired speed on the computer console and release the adjustment key. The computer will obey the command gradually.

4) Use caution while participating in other activities while walking on your treadmill; such as watching television, reading, etc. These distractions may cause you to lose balance or stray from walking in the Centre of the belt; which may result in serious injury.

5) In order to prevent losing balance and suffering unexpected injury, NEVER mount or dismount the treadmill while the belt is moving. This unit starts with a very low speed. Stand on the side rails and wait for the belt to start moving before stepping on the belt.

6) Always hold on to handrail while making control changes.

7) A safety key is provided with this machine. Remove the safety key will stop the walking belt immediately; the treadmill will shut off automatically. Insert the safety key will reset the display.

8) Do not use excessive pressure on console control keys. They are precision set to function properly with little finger pressure.

9) This appliance is not intended for use by persons (including children) with reduced physical, sensory or mental capabilities, or lack of experience and knowledge, unless they have been given supervision or instruction concerning use of the appliance by a person responsible for their safety, Children should be supervised to ensure that they do not play with the appliance.

10) Please consult your doctor at first before running, if you have one of the following diseases:

a. Cardiopathy, hypertension, sugar diabetes, respiratory disease, smoking, and other chronic diseases, complication disease.

b. If you are over 35 years old and heavier than common weight.

c. Women in pregnant or in breasting period.

11) Please stop exercising immediately and consult your doctor when you feel giddy, surfeit, thorax ache or other symptoms.

12) Please drink adequate water after taking exercises on our treadmill for more than 20 minutes.

WARNING: Now here we suggest that you should consult with your physician or health professional before starting your workout, especially for the age up to 35 old or once-health problem people. We take no responsible for any troubles or hurts if you don't following our specification. Treadmill will be carefully assembled and covered the motor shield, then connect to the power.

IV. ASSEMBLY INSTRUCTIONS

The following figure shows the scatter diagram of the parts installed in the whole machine table. Open the packaging box, and you can remove the following parts from the box.

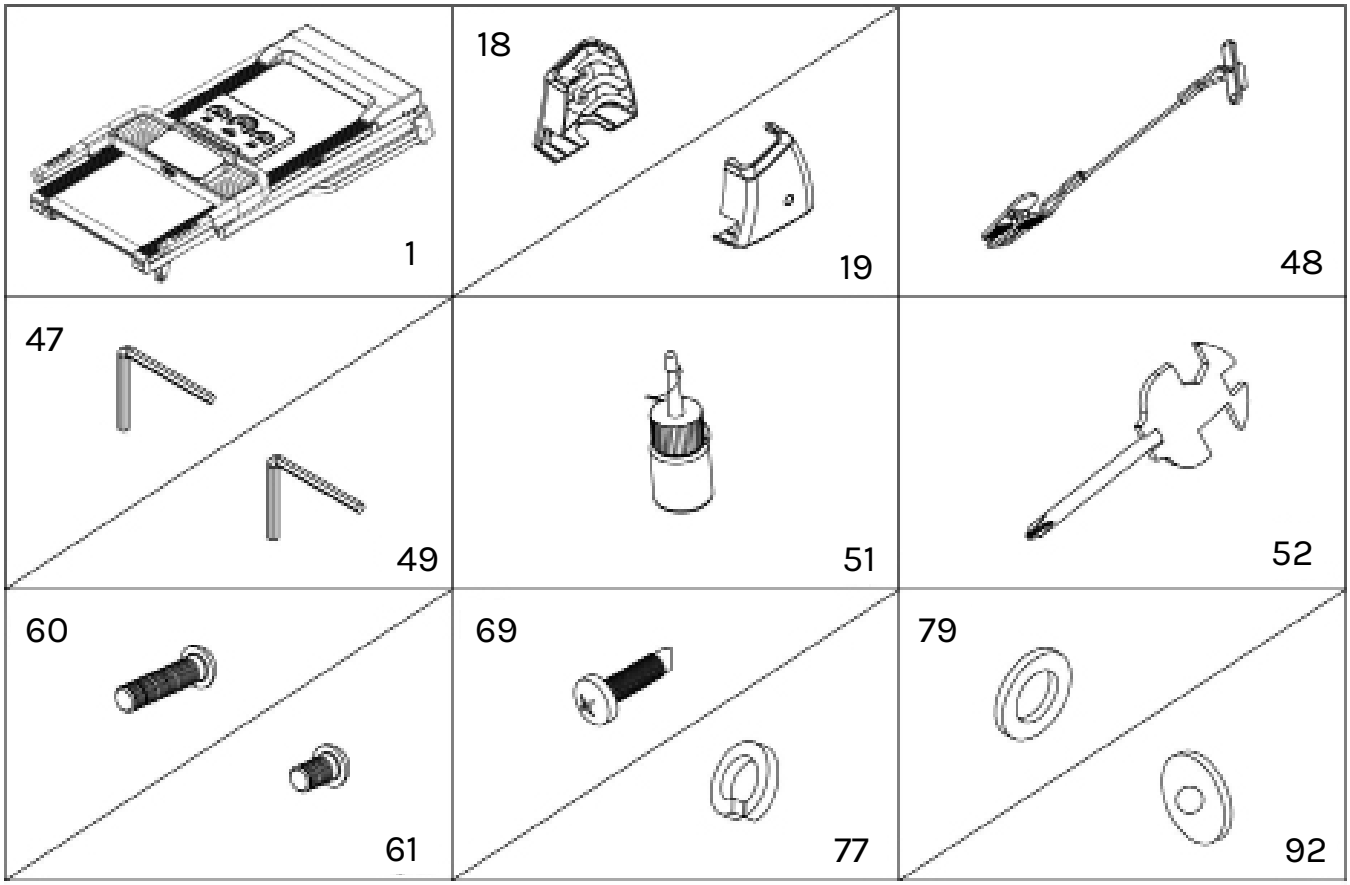

PARTS LIST

Part No.	Description	Specs	Qty.
1	Main frame assembly		1
18	Left base cover		1
19	Right base cover		1
47	5 # Allen wrench	5mm	1
48	Safety lock		1
49	6 # Allen wrench	6mm	1
51	Silicon oil		1

Part No.	Description	Specs	Qty.
52	With cross wrench	S = 13, 14, 15	1
60	Hex socket flat round head screw	M8 * 45	2
61	Hex socket flat round head screw	M8 * 16	4
69	Cross grooves pan head self-tapping and self-drilling screw with pad	ST4.2 * 19	2
77	Standard spring washer	8	6
79	Flat Washer Class C	8	2
92	Curved gasket	8	4

Installation Tools:

5 # Allen key 5mm 1pcs. With cross wrench S = 13, 14, 15 1pcs.

6 # Allen key 6mm 1pcs.

Note: Do not plug in the power supply until the installation is completed.

V. ASSEMBLY INSTRUCTIONS

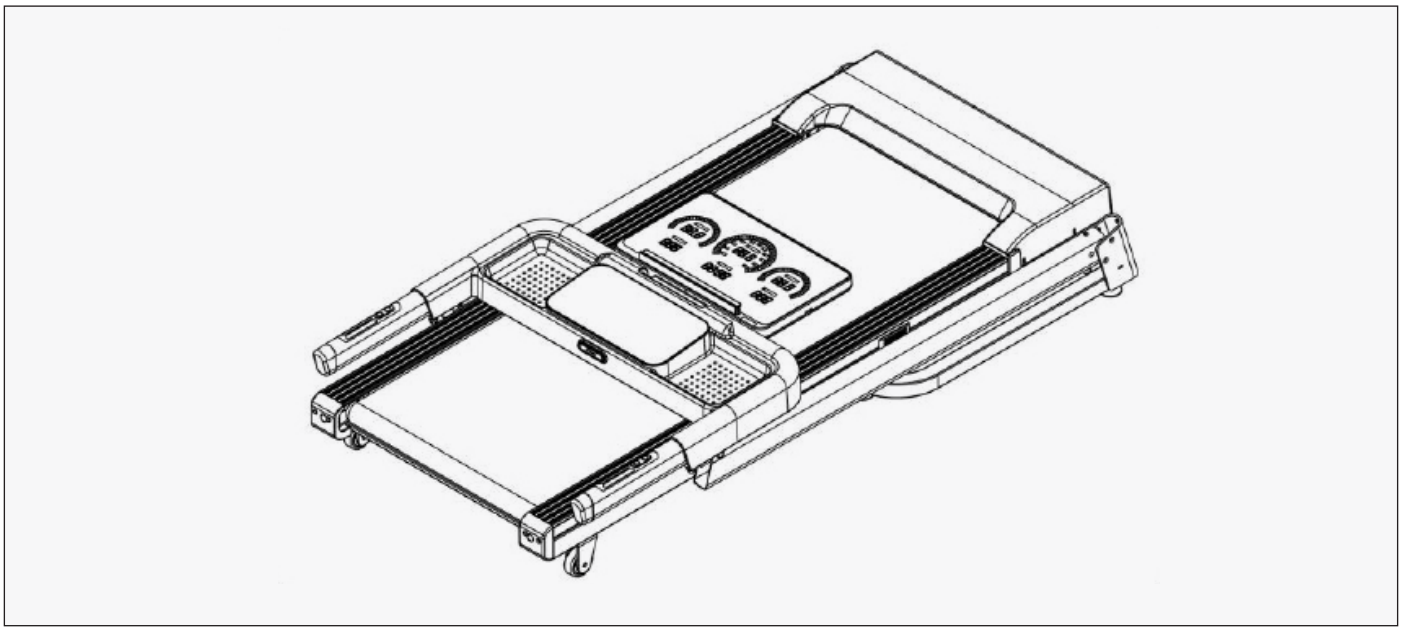

STEP 1

Open the packaging box, remove the materials listed above, and lay the main components flat on the ground.

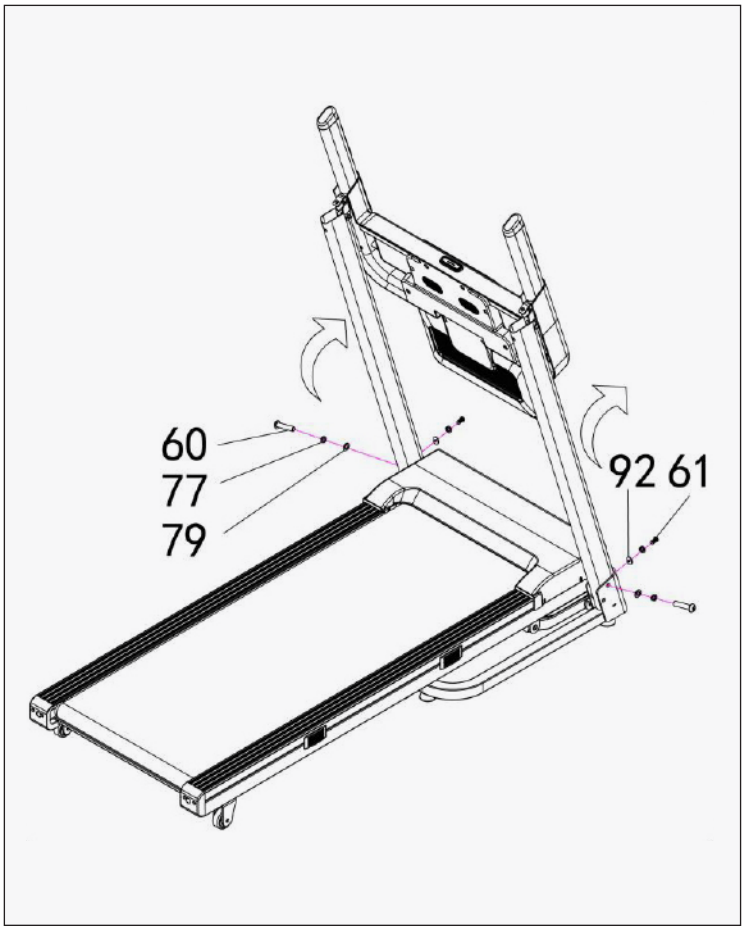

Caution: Hold the column securely with one hand during installation to prevent it from falling and causing injury. Be careful not to squash any cables.

STEP 2

1. As shown in the image on the left, first lift the column into an upright position.

2. Then, use the 5# Allen wrench (47), M8*45 Allen flat round head screws (60), standard spring washers (77), and flat washers Grade C (79) to secure the column to the base.

3. After that, use the M8*16 socket hexagon flat round head screws (61), standard spring washers (77), and arc washers (92) to further secure the connection.

4. Repeat the same steps for both the left and right sides.

Caution: When folding the console, ensure the internal wires are not pinched and verify that all wire connections are secure. While tightening the screws, support the electronic console with your hand to prevent it from falling.

STEP 3

1. As shown in the image on the left, first fold the electronic console backward.

2. Then, using the 5# Allen wrench (47), secure it to the left and right columns with M8*16 Allen flat round head screws (61), standard spring washers (77), and arc gaskets (92).

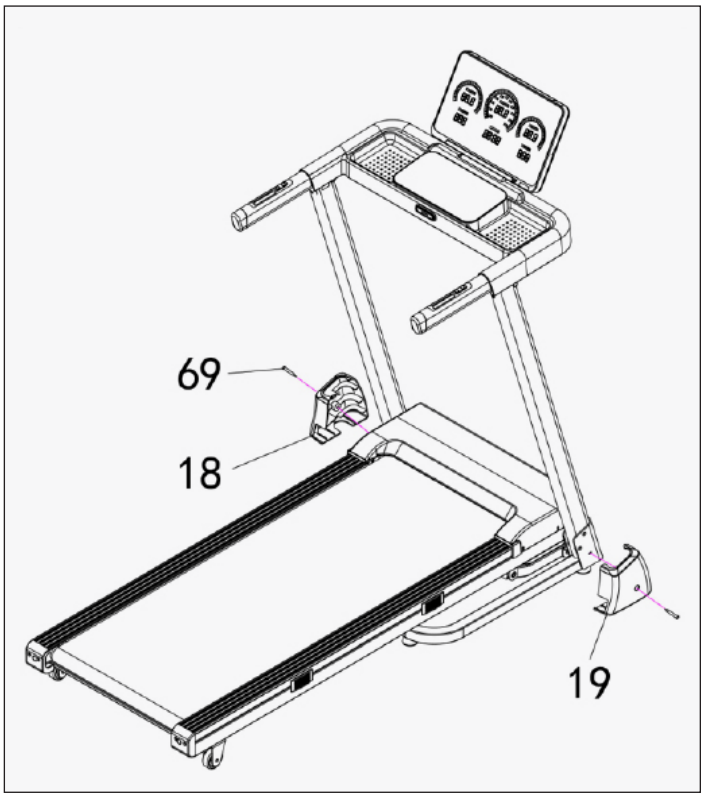

STEP 4

1. As shown in the image on the left, use the cross wrench (52) to attach the left and right base covers (18, 19) to the base. Secure them with ST4.2*19 cross groove pan head self-tapping and self-drilling screws (69).

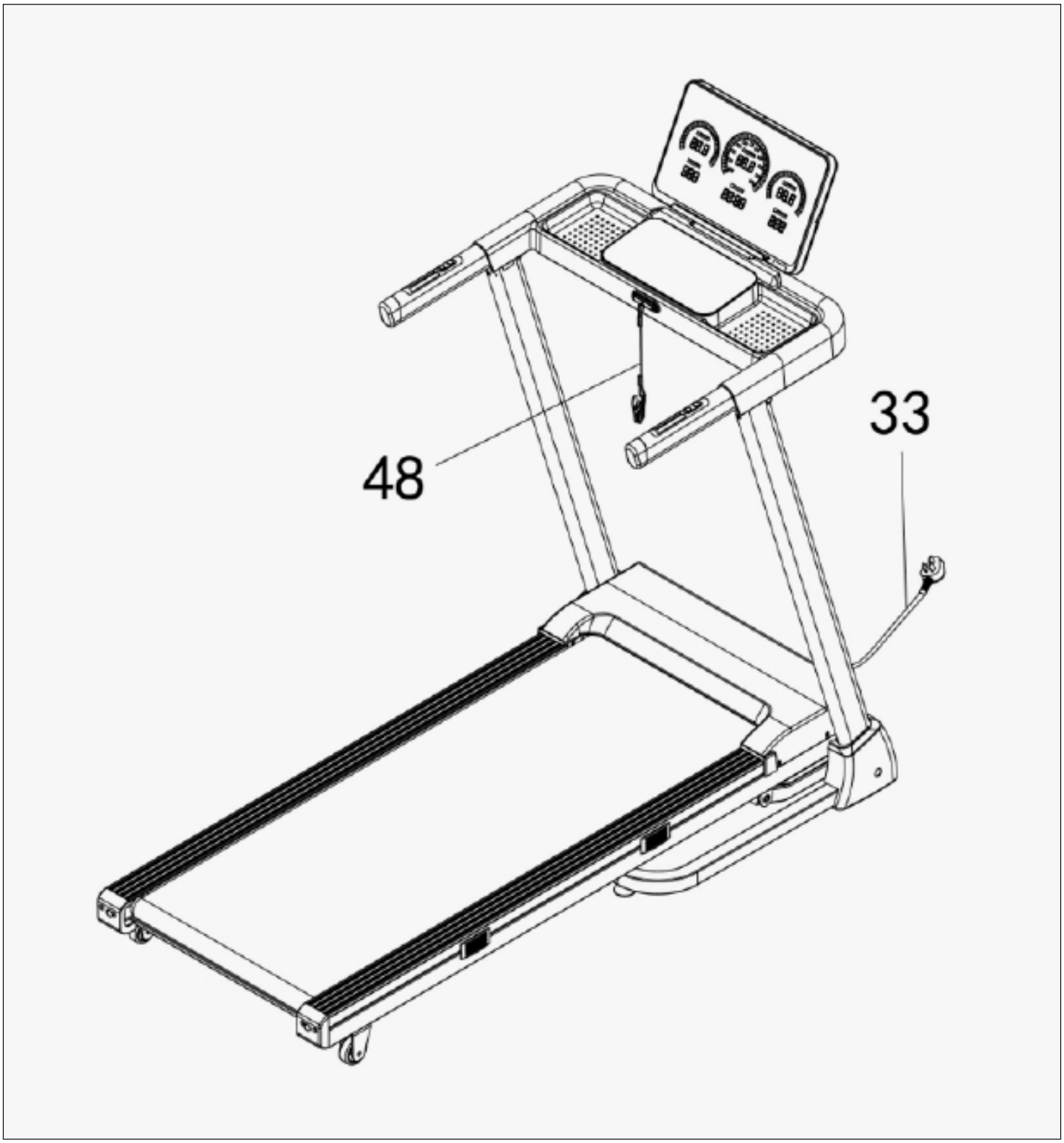

STEP 5

1. Attach the safety key (48) to the console. Then, connect the power cord (33) to the wall power outlet.

Do not use a power board or plug with a high-powered electrical equipment.

VI. FOLDING AND UNFOLDING

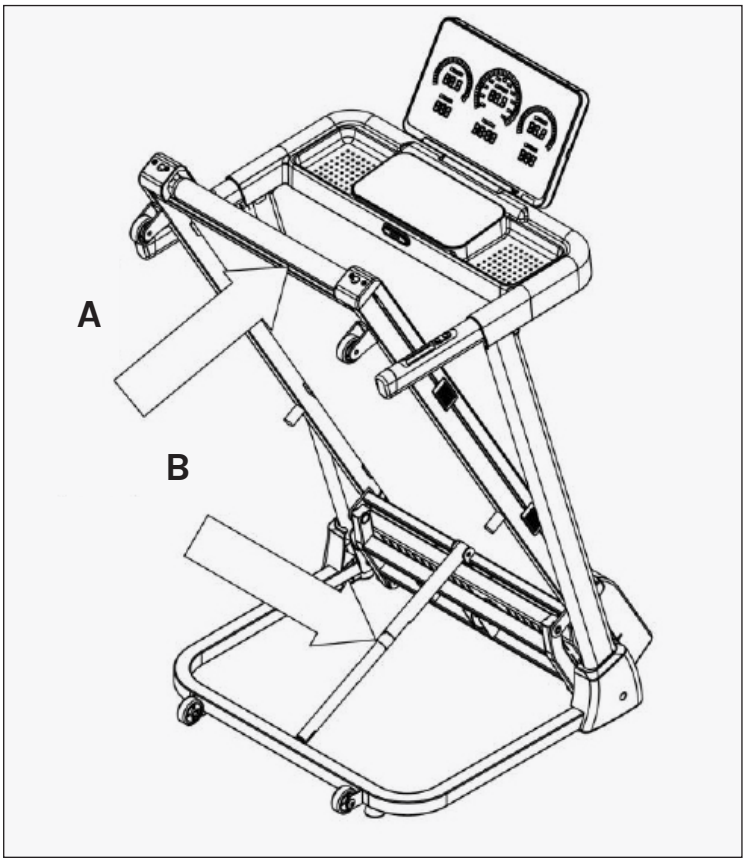

FOLDING INSTRUCTION

1. Hold the machine in position A with both hands and push it up slightly, until you hear the sound of the air pressure rod sleeve against the air pressure rod B.

Note: The wire rope assembly needs to be unplugged when folding.

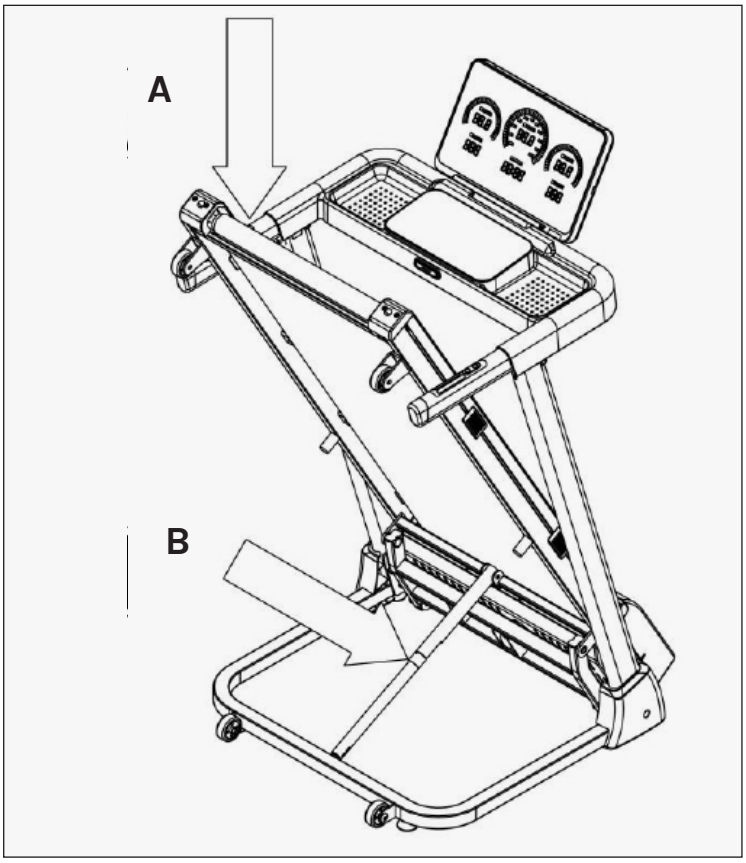

UNFOLDING INSTRUCTION

1. Hold position A with both hands, then with your feet push down on the section marked B to release the hydraulic.

Pull the deck gently and the deck will slowly lower on its own.

Keep children and pets away from the folding bar to prevent accidental unlocking.

VII. OPERATION GUIDE

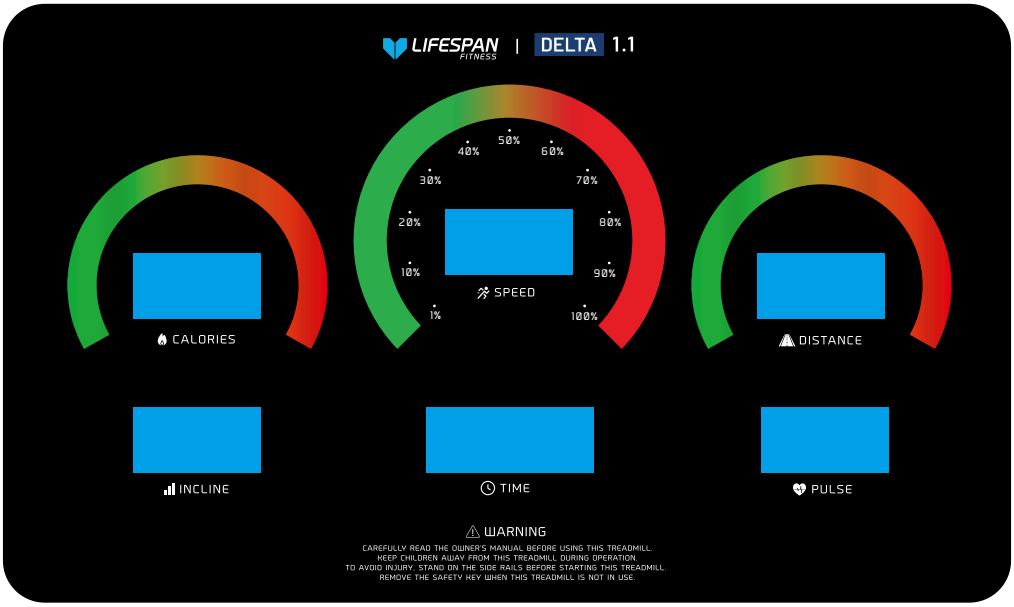

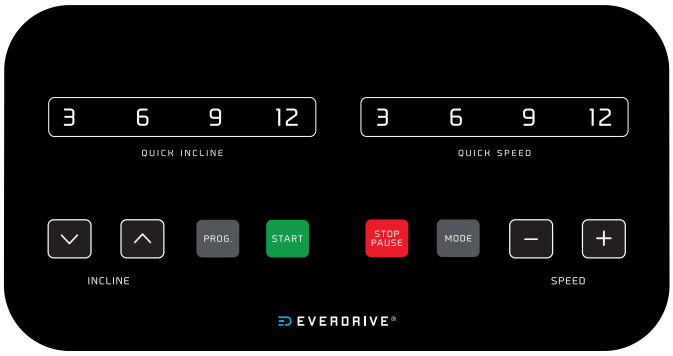

1. WINDOW DESCRIPTION:

1. Calories Window: Displays the number of calories burned during exercise.
2. Incline Window: Displays the current incline level.
3. Time Window: Shows the duration of the workout.
4. Distance Window: Displays the distance covered.
5. Speed Window: Shows the current speed. During startup, a 3-second countdown is displayed: 3, 2, 1.
6. Heart Rate Window: Displays your heart rate when using the hand pulse sensors.

2. KEY FUNCTIONS

2.1 PROG. Button

1. Used to select workout programs.
2. Selection cycle: P01–P15 FAT Manual Mode.

2.2 MODE Button

1. Used to select modes and settings.
2. Selection cycle during standby: Manual Mode → Time Countdown → Distance Countdown → Calorie Countdown.
3. In FAT measurement mode, use this button to set parameters in the following order:

Name → Age → Height Weight.

2.3 START Button

1. Press to start the treadmill.

2. After pressing, the treadmill will start at the lowest speed (or the program's default speed) following a 3-second countdown.

2.4 STOP Button

1. Press to pause the treadmill gradually.

2. All data will be retained during the pause.

3. Press START during pause to resume from the last settings (speed and incline will reset to their lowest values for safety).

4. Press STOP again during pause to return to standby mode.

2.5 SPEED ▲ / ▼ Buttons

1. Adjust speed during exercise.

2. Can also be used to set parameters when in standby mode.

2.6 Speed Shortcut Buttons (3, 6, 9, 12):

Instantly set the speed to 3, 6, 9, or 12 km/h.

2.7 INCLINE ▲ / ▼ Buttons

1. Adjust incline level during exercise.

2. Can also be used to set incline parameters in standby mode.

2.8 Incline Shortcut Buttons (3, 6, 9, 12):

Instantly adjust incline to 3, 6, 9, or 12 levels.

2.9 Right Armrest Buttons

Speed increase/decrease shortcut.

2.10 Left Armrest Buttons

Start/Stop shortcut.

Additional Notes:

- A confirmation beep will sound when any button is pressed successfully.
- A long beep will sound if adjustments exceed the machine's limits.
- No sound will occur when a button press is invalid.

3. MAIN FUNCTIONS

After turning on the power, all display windows will light up for 2 seconds, then the treadmill will enter standby mode.

3.1 Quick Start (Manual Mode)

- Attach the safety key.
- Press the **START** button. After a 3-second countdown, the treadmill will begin operating at the lowest speed.
- Use the SPEED ▲ / ▼ buttons to adjust the speed as needed.
- Use the INCLINE ▲ / ▼ buttons to adjust the incline level.
- To stop the treadmill, press the **STOP** button or remove the safety key to immediately stop operation.

3.2 Countdown Modes

- Press the MODE button to cycle through the available countdown options:
Time Countdown → Distance Countdown → Calorie Countdown.
- The corresponding window will display the default value, which will blink to indicate it can be adjusted.
- Use the SPEED ▲ / ▼ and INCLINE ▲ / ▼ buttons to set your desired target value.
- Press the START button. After the 3-second countdown, the treadmill will start at the lowest speed.
- During your workout, use the SPEED ▲ / ▼ buttons to adjust the speed and the INCLINE ▲ / ▼ buttons to change the incline.
- Once the countdown reaches zero, the treadmill will gradually slow down and come to a stop.
- You can also stop the treadmill at any time by pressing the STOP button or removing the safety key.

During Operation:
- You can manually adjust the SPEED and INCLINE levels at any time using the ▲ / ▼ buttons or the armrest controls.
- However, when the treadmill transitions to the next segment, it will automatically reset to the preset speed and incline for that segment.
- To stop the workout at any time, press the STOP button or remove the safety key.

End of Program
- When the program finishes, the corresponding window will flash, and a prompt tone will sound 15 times.
- After the alert, all workout data will reset to 0, and the treadmill will return to standby mode.

4. HEART RATE MEASUREMENT

- To measure your heart rate, place both hands on the steel sensors located on the left and right armrests.
- After approximately **5 seconds**, your heart rate will appear in the **PULSE** window.
- For the most accurate reading, stand still on the treadmill (without moving) and hold the sensors for at least **30 seconds.**
- **Note:** Heart rate data is for reference only and should not be used for medical purposes.

5. SLEEP (HIBERNATION) FUNCTION

- If there is no operation for more than 10 minutes while the treadmill is stopped, the system will automatically turn off all displays and enter sleep mode.
- Press any button to wake the treadmill from sleep mode.

6. SAFETY LOCK FUNCTION

- If the safety lock is disconnected at any time, the treadmill will immediately stop, and all workout data will reset to 0.
- All display windows will show "---".
- The safety lock must be properly attached for normal treadmill operation.

7. MOTION PARAMETER DISPLAY AND SETTING RANGES

Parameter	Display Range	Manual Mode Default	Program Default	Setting Range
Speed	0.8 – 12 KM/H	—	—	0.8 – 12 KM/H
Incline	0% – 15%	0%	—	0% – 15%
Time	0:00 – 99:59 (min:sec)	30:00	30:00	5:00 – 99:00
Distance	0.00 KM – 99.9 KM	1.00 KM	—	0.5 KM – 99.9 KM
Calories	0 Kcal – 999 Kcal	50 Kcal	—	10 Kcal – 990 Kcal

8. BLUETOOTH DUAL-MODE FUNCTION

- Scan the QR code on the treadmill to download the compatible mobile app.
- Once installed, connect your device to the treadmill via Bluetooth.
- The app allows you to synchronize workout data and control treadmill functions (speed/incline, start and stop).

9. 15 BUILT-IN PROGRAM DATA SHEETS 20 SEGMENTS

PROGRAM	TIME	1	2	3	4	5	6	7	8	9	10	11	12	13	14	15	16	17	18	19	20
P01	INCLINE	1	1	2	2	2	3	3	3	2	2	1	2	2	1	1	3	3	2	2	2
P02	INCLINE	1	2	2	2	2	3	3	2	2	2	2	2	3	3	3	4	4	3	2	2
P03	SPEED	2	4	4	6	6	4	7	7	7	4	7	7	4	4	4	2	4	5	3	2
	INCLINE	2	3	3	2	2	3	3	3	2	2	2	2	4	4	4	6	6	3	2	2
P04	INCLINE	2	3	3	2	2	3	3	3	2	2	2	2	4	4	4	6	6	3	2	2
P05	INCLINE	3	3	3	4	4	5	5	5	4	4	4	4	5	5	3	3	3	2	2	2
P06	INCLINE	3	5	5	5	4	4	4	3	3	3	3	4	4	4	3	3	3	4	3	2
P07	INCLINE	4	4	4	4	3	3	6	6	6	7	7	8	8	9	9	6	6	5	4	4
P08	INCLINE	4	5	5	5	6	6	6	7	8	9	9	9	10	10	10	12	12	8	6	3
P09	SPEED	2	4	4	7	7	4	7	8	4	8	9	9	4	4	4	5	6	3	3	2
	INCLINE	5	5	5	6	6	6	4	4	6	6	5	5	8	8	9	9	9	7	4	2
P10	INCLINE	5	6	6	6	7	5	8	8	4	4	4	5	5	8	8	10	10	8	6	3
P11	INCLINE	4	5	3	2	6	6	2	2	2	2	2	4	5	6	3	2	5	5	2	0
P12	SPEED	3	4	9	9	5	9	5	8	5	9	7	5	5	7	9	9	5	7	6	3
	INCLINE	1	2	3	2	3	5	5	0	0	2	3	5	7	3	3	5	6	5	3	3
P13	INCLINE	3	3	5	6	5	3	3	7	5	3	2	0	0	5	5	3	2	3	2	1
P14	INCLINE	4	4	4	4	3	3	6	6	6	7	7	8	8	9	9	6	6	5	4	4
P15	INCLINE	3	3	3	4	4	5	5	5	4	4	4	4	5	5	3	3	3	2	2	2

11. ERROR CODES AND TROUBLESHOOTING TABLE

Error Code	Reason	Suggestion Solution	
E01	Poor communication between console and controller	- Disrupted communication between console and controller. - Loose or damaged communication cables. - Faulty communication circuits.	- Check and secure all connections between console and controller. - Inspect and replace damaged communication cables. - Replace faulty console or controller if needed.
E02	Burst protection (Overvoltage)	- Power supply voltage is too low (below 50% of normal voltage). - Controller damage (burnt components). - Loose motor wires.	- Ensure power supply matches voltage specifications. - Replace controller if there's a burning smell. - Check and reconnect motor wires if loose.
E03	No speed sensor signal detected	- Sensor plug is loose or disconnected. - Magnetic sensor is damaged or defective.	- Securely reconnect the sensor plug. - Inspect and replace the magnetic sensor if necessary.
E05	Overcurrent protection	- System overload or treadmill parts stuck. - Motor unable to rotate due to excessive load. - Voltage inconsistency or low supply voltage.	- Check treadmill for blockages and reduce load. - Restart the treadmill. - Inspect motor for unusual noise or smell and replace if faulty. - Verify correct voltage use.
E06	Controller self-test error	- Internal controller fault.	- Inspect the controller. - Replace the controller if self-test errors persist.
E07	Parameter missing	- Missing or corrupted settings in controller.	- Reset system parameters if possible. - Replace controller if parameters can't be restored.
E08	EEPROM corrupted	- EEPROM memory failure.	- Replace the controller if EEPROM is corrupted.
No Code (Motor won't run)	Motor fails to start after pressing **START**	- Motor control circuit abnormal. - Lower control fuse is damaged. - Loose motor wire. - Burned-out IGBT on lower controller.	- Check all motor control circuit connections. - Inspect and replace the lower control fuse. - Reconnect loose motor wires. - Test and replace the IGBT or controller.

VIII. MAINTENANCE GUIDE

1. Cleaning Guidelines

Proper cleaning helps extend the life of your electric treadmill.

A. Regular Dust Removal

o Clean dust regularly from the treadmill's surface and components.
o Pay special attention to sweeping the exposed areas on both sides of the running belt. This helps prevent debris buildup underneath the belt.

B. Clean Footwear

o Always wear clean sneakers while using the treadmill to prevent foreign objects from damaging the running board and belt.

C. Cleaning the Running Belt

o Wipe the surface of the running belt with a damp cloth and mild soap.
o Avoid splashing water onto electrical components or underneath the running belt.

D. Motor Cleaning

o Unplug the power supply before opening the motor protective cover.
o Clean inside the motor cover at least once per year by vacuuming out dust and debris.

2. Lubrication Maintenance

This electric treadmill is pre-lubricated, but regular lubrication is essential for optimal performance and longevity.

Why Lubricate?

Friction between the running board and running belt affects the treadmill's performance and lifespan. Regular lubrication reduces wear and ensures smooth operation.

Lubrication Schedule

User Type	Usage	Lubrication Frequency
Lightweight Users	Less than 3 hours per week	Once a year
Middleweight Users	3 – 5 hours per week	Every 6 months
Heavyweight Users	More than 5 hours per week	Every 3 months

Important Notes:

- Inspect the running board regularly. If you notice damage, contact our customer service centre immediately.

- Use special lubricating oil designed for treadmills. You can purchase it from your local dis-tributor or contact us directly.

- Any additional repairs should be performed by qualified professionals.

3. Additional Maintenance Tips

1. Rest Periods

o To prolong your treadmill's life, turn off the power after 1.5 hours of continuous use.

o Allow the treadmill to rest for **10 minutes** before using it again.

2. Running Belt Tension

o If the belt is **too loose**, it may slip during use.
o If the belt is **too tight**, it can strain the motor and increase wear on the drum and belt.
o Correct belt tension allows you to lift both sides of the belt about **50 – 75 mm** from the running board by hand.

Running Belt Adjustment Instructions

1. If the Running Belt Shifts to the Right
Turn off the treadmill by unplugging the power switch and removing the safety lock.
Locate the adjustment bolt on the right rear end of the treadmill.
Rotate the right adjustment bolt clockwise by 1/4 turn.
Plug the power switch back in, reattach the safety lock, and restart the treadmill.
Run the treadmill and observe the belt alignment.
Repeat the steps if needed until the running belt is centred.
Refer to Figure A for illustration.

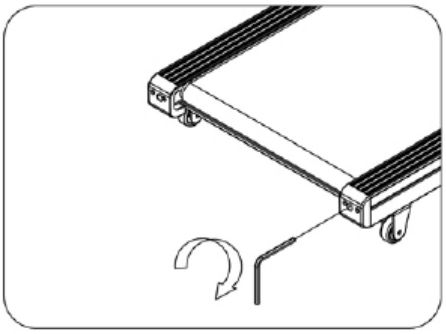

A

2. If the Running Belt Shifts to the Left
Turn off the treadmill by unplugging the power switch and removing the safety lock.
Locate the adjustment bolt on the left rear end of the treadmill.
Rotate the left adjustment bolt clockwise by 1/4 turn.
Plug the power switch back in, reattach the safety lock, and restart the treadmill.
Run the treadmill and observe the belt alignment.
Repeat the steps if needed until the running belt is centred.
Refer to Figure B for illustration.

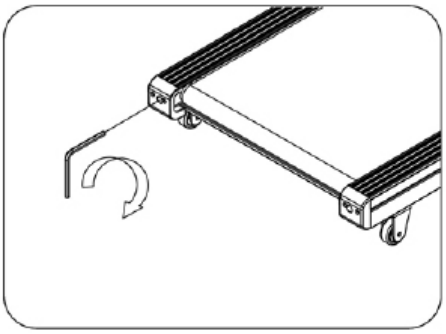

B

3. If the Running Belt is Loose After Adjustment or Prolonged Use
Turn off the treadmill by unplugging the power switch and removing the safety lock.
Rotate both the left and right adjustment bolts clockwise by 1/4 turn simultaneously.
Plug the power switch back in, reattach the safety lock, and restart the treadmill.
Run the treadmill and stand on the running belt to check the tightness.
Repeat the steps, if necessary, until the running belt is moderately tight.
Refer to Figure C for illustration.

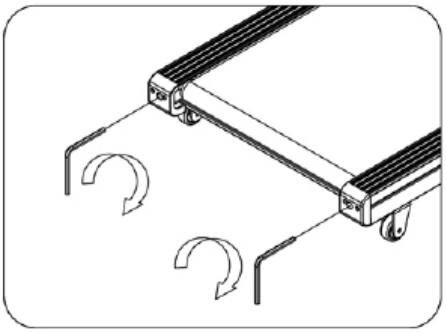

C

Important Notes
Always unplug the power switch and remove the safety lock before making any adjustments.
A properly adjusted running belt should run centred and have the correct tension—you should be able to lift both edges about 50 – 75 mm off the running board by hand.

IX. EXPLODED DIAGRAM

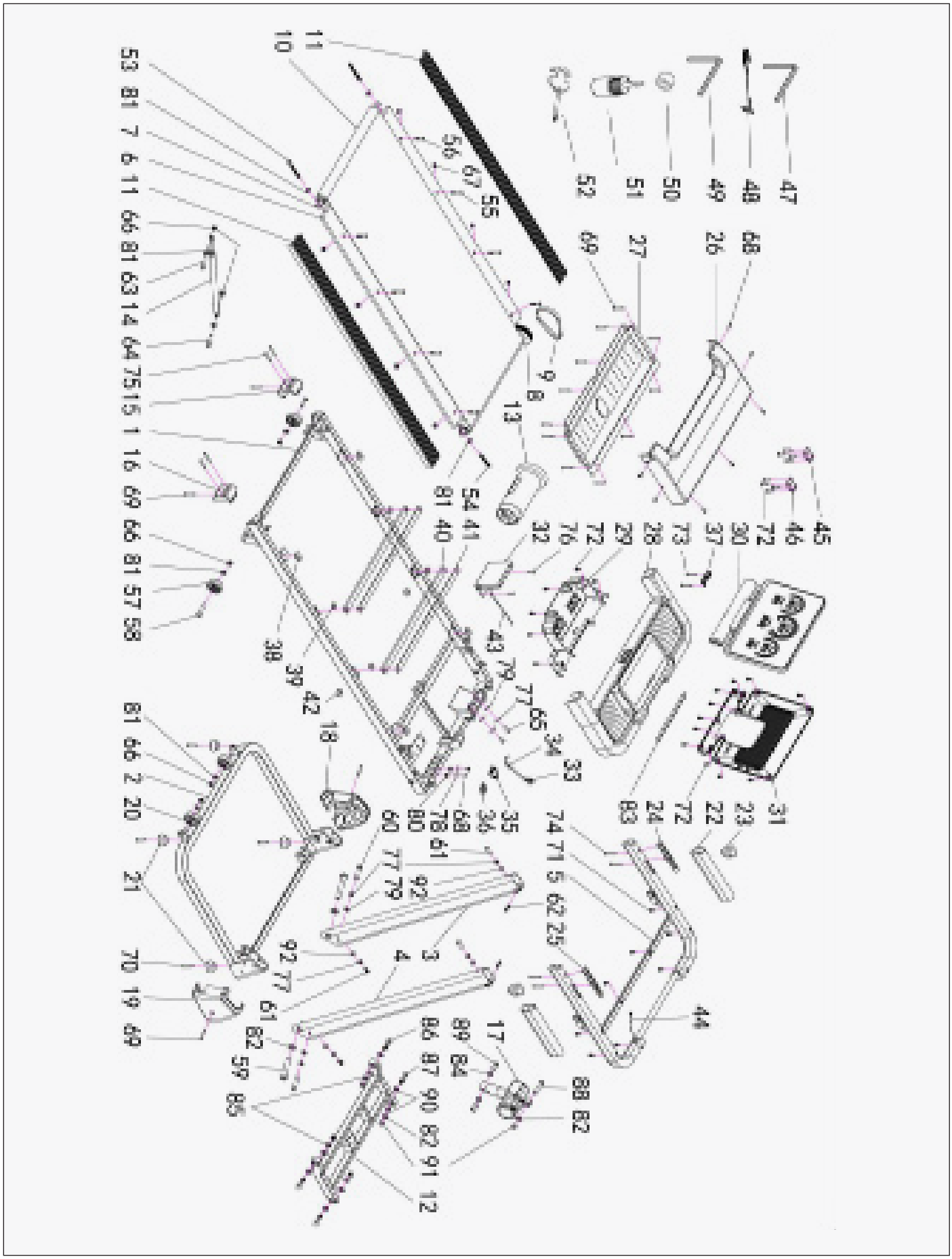

X. COMPLETE PARTS LIST

No.	Name	Specification	Qty.
1	Main frame assembly		1
2	Base assembly		1
3	Left column assembly		1
4	Right column assembly		1
5	Electronic watch frame assembly		1
6	Running board		1
7	Rear drum		1
8	Front drum		1
9	Multi-wedge belt		1
10	Running belt		1
11	Edge strip		2
12	Lifting frame assembly		1
13	DC motor		1
14	Pneumatic bar		1
15	Left rear corner guard		1
16	Right rear corner guard		1
17	Lift motor		1
18	Left base cover		1
19	Right base cover		1
20	Carrying wheel		2
21	Foot pad		4
22	Sponge sheath		2
23	Waist round tube inner tube		2
24	Left pulse iron tablet		1
25	Right pulse iron tablet		1
26	Motor upper cover		1
27	Motor lower cover		1
28	Electronic watch upper cover		1
29	Electronic watch lower cover		1
30	Panel upper cover		1
31	Panel lower cover		1

No.	Name	Specification	Qty.
49	Allen wrench	6#	1
50	Magnetic ring		1
51	Silicon oil		1
52	With cross handle	S = 13, 14, 15	1
53	Bolt	M8 * 65	2
54	Bolt	M8 * 45	1
55	Bolt	M6 * 40	4
56	Bolt	M6 * 30	4
57	Roller wheel		2
58	Bolt	M8 * 40	2
59	Bolt	M10 * 45	2
60	Bolt	M8 * 45	2
61	Bolt	M8 * 16	4
62	Bolt	M6 * 20	2
63	Bolt	M8 * 25	1
64	Bolt	M8 * 42	1
65	Bolt	M8 * 14	2
66	Bolt	6	8
67	Bolt	8	6
68	Bolt	M5 * 8	9
69	Bolt	4.2*19	15
70	Bolt	4.2*25	4
71	Bolt	4.2*30	8
72	Bolt	4.2*12	27
73	Bolt	ST2.9 * 8	2
74	Bolt	ST4.2 * 45	4
75	Bolt	M5 * 20	4
76	Bolt	4.2*12	2

32	Lower controller		1
33	Power cord		1
34	Power cord buckle		1
35	Overload protector		1
36	Power switch		1
37	Safety lock seat		1
38	Rubber mat		4
39	Nylon isolation pad		4
40	Running board reinforce-ment tube		2
41	Reinforcing rod cushion		4
42	Buffer nut column		2
43	Lower segment line		1
44	Upper segment line		1
45	Left tile pressure plate		1
46	Right tile pressure plate		1
47	Allen wrench	5#	1
48	Safety lock		1

77	Standard spring washer	8	8
78	Standard spring washer	5	2
79	Flat Washer Class C	8	4
80	Internal serrated locking washer	5	2
81	Internal serrated locking washer	8	9
82	Internal serrated locking washer	10	5
83	IP Rack		1
84	Standard spring washer	10	2
85	Flat washer	10	2
86	Bolt	M10 * 40	2
87	Bolt	M10 * 45	2
88	Bolt	M10 * 42	1
89	Bolt	M10 * 12	2
90	Spacer sleeve		4
91	Bolt		5
92	Curved gasket	8	4

Note: If the color and structure of the images in this manual differ slightly from the actual product, please consider the real product as the standard. The company retains the right to enhance the product, and no advance notice will be provided at such times.

XI. EXERCISE GUIDE

PLEASE NOTE:

Before beginning any exercise program, consult your physician. This is important especially if you are over the age of 45 or individuals with pre-existing health problems.

The pulse sensors are not medical devices. Various factors, including the user's movement, may affect the accuracy of heart rate readings. The pulse sensors are intended only as an exercise aid in determining heart rate trends in general.

Exercising is great way to control your weight, improving your fitness and reduce the effect of aging and stress. The key to success is to make exercise a regular and enjoyable part of your everyday life.

The condition of your heart and lungs and how efficient they are in delivering oxygen via your blood to your muscles is an important factor to your fitness. Your muscles use this oxygen to provide enough energy for daily activity. This is called aerobic activity. When you are fit, your heart will not have to work so hard. It will pump a lot fewer times per minute, reducing the wear and tear of your heart.

So as you can see, the fitter you are, the healthier and greater you will feel.

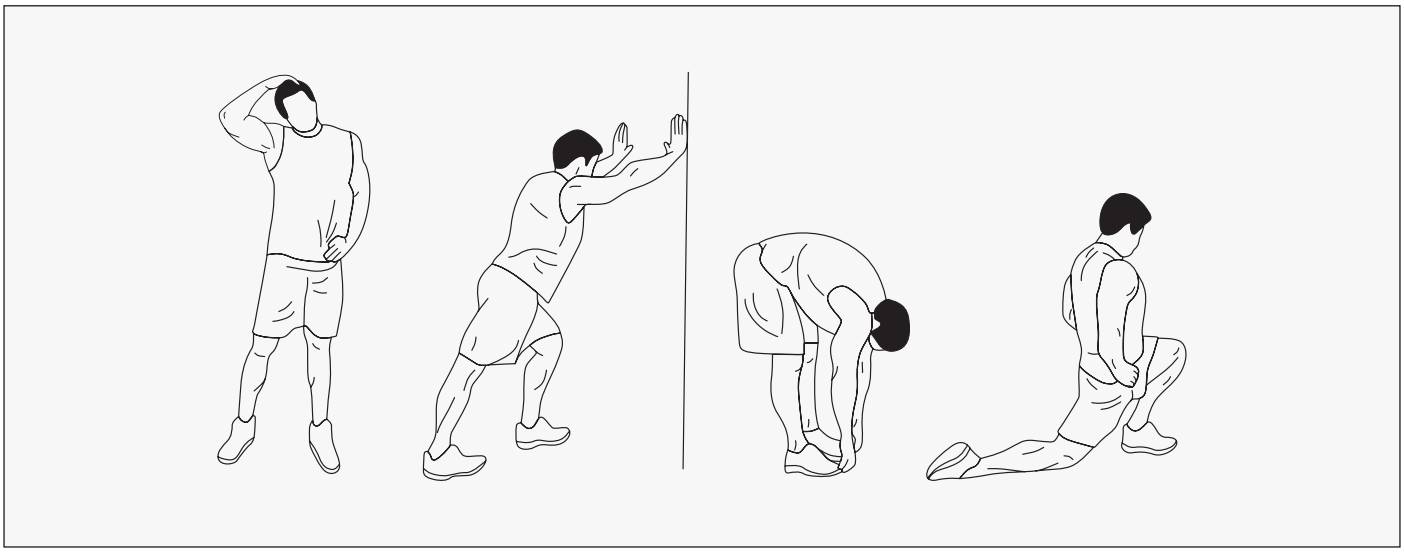

WARM UP

Start each workout with 5 to 10 minutes of stretching and some light exercises. A proper warm-up increases your body temperature, heart rate and circulation in preparation for exercise. Ease into your exercise.

After warming up, increase the intensity to your desired exercise program. Be sure to maintain your intensity for maximum performance. Breathe regularly and deeply as you exercise.

COOL DOWN

Finish each workout with a light jog or walk for at least 1 minute. Then complete 5 to 10 minutes of stretching to cool down. This will increase the flexibility of your muscles and will help prevent post-exercise problems.

WORKOUT GUIDELINES

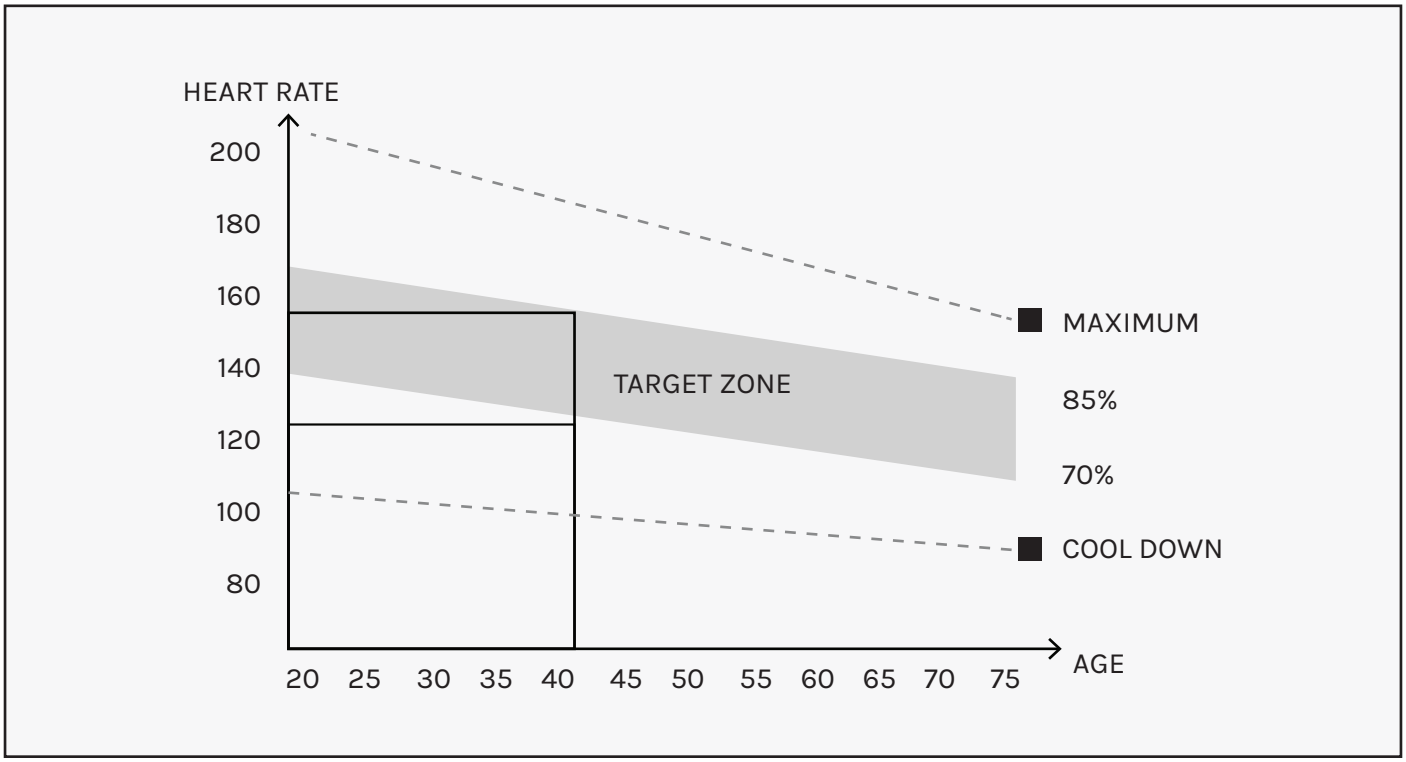

This is how your pulse should behave during general fitness exercise. Remember to warm up and cool down for a few minutes.

The most important factor here is the amount of effort you put in. The harder and longer you work, the more calories you will burn.

XII. WARRANTY

AUSTRALIAN CONSUMER LAW

Many of our products come with a guarantee or warranty from the manufacturer. In addition, they come with guarantees that cannot be excluded under the Australian Consumer Law. You are entitled to a replacement or refund for a major failure and compensation for any other reasonably foreseeable loss or damage.

You are entitled to have the goods repaired or replaced if the goods fail to be of acceptable quality and the failure does not amount to a major failure. Full details of your consumer rights may be found at **www.consumerlaw.gov.au**.

Please visit our website to view our full warranty terms and conditions:
http://www.lifespanfitness.com.au/warranty-repairs

WARRANTY AND SUPPORT

Any claim against this warranty must be made through your original place of purchase.
Proof of purchase is required before a warranty claim may be processed.

If you have purchased this product from the Official Lifespan Fitness website, please visit
https://lifespanfitness.com.au/warranty-form

For support outside of warranty, if you wish to purchase replacement parts or request a repair or service, please visit h**ttps://lifespanfitness.com.au/warranty-form** and fill in our Repair/Service Request Form or Parts Purchase Form.

Scan this QR code with your device to go to **lifespanfitness.com.au/warranty-form**

XIII. HAND PULSE TECHNOLOGY

This product comes equipped with hand pulse sensors which are used to pick up tiny EKG/ECG signals that run through the body when your heart beats. These electrical EKG/ECG signals are very small and must be amplified 1000 times to make the signal viable for the computer to display your pulse.

To ensure proper operation:

- The user must maintain good, consistent contact on all four sensors.
- The users skin cannot be too dry or too wet.

Other factors that could affect the reading:

- Change of grip on the sensors (during slow pace walking and up to running).
- Tightening of hand muscles will produce small electrical signal.
- Static electricity charges from the air or from walking on the treadmill.

EKG/ECG Sensors may filter through actual EKG/ECG signals and "Noise" factors that may affect the reading. This will cause the pulse reading to be delayed and will take longer to update the display as the heart rate changes. Too much noise will create an incorrect reading. Medical conditions or having no electrical signal in the hands are other factors that may also affect pulse readings.

These are limitations of hand pulse technology and even the most expensive systems (which can cost upwards of $3,000) used in hospitals have the same problems. The difference is that a patient in a hospital is not running on a treadmill. Hand pulse technologies work well on stationary exercise machines like bikes and even elliptical cross trainers but are not perfect on a treadmill. We offer treadmills with a wireless heart rate receiver which may be the more accurate option.

To test if your hand pulse sensors are working up to specification, hold them while standing on the sidestep rails, not walking, and see if the reading is more in line with what you would expect. This will eliminate the movement and static electricity factors. If your hands are dry, then wet them slightly (saliva works as a great conductor if this doesn’t bother you).

SECURITY SUPPORT INFORMTAION

REPORTING

To report a cyber security issue, please email **support@gflgroup.com.au** with product details and a description of the issue.

We will acknowledge receipt and provide updates as it is investigated.

DEVICE SUPPORT PERIOD

This product will receive security updates for a minimum of 12 months from the date of purchase.

LIFESPAN FITNESS

WWW.LIFESPANFITNESS.COM.AU