Pursuit Max Treadmill

USER MANUAL

Product may vary slightly from the item pictured due to model upgrades.

Read all instructions carefully before using this product.
Retain this owner's manual for future reference.

NOTE:
This manual should not be used to guide your purchasing decision. Your product, and the contents inside its carton, may vary from what is listed in this manual. This manual may also be subject to updates or changes. Updated manuals are available through our website at www.lifespanfitness.com.au

TABLE OF CONTENTS

I. Important Safety Instructions 03

II. Important Electrical Information 05

III. Important Operating Instructions 06

IV. Assembly Hardware 07

V. Assembly Instructions 08

VI. Folding and Unfolding 11

VII. Operation Guide 12

VIII. Exercise Guide 17

IX. Maintenance Instructions 19

X. Exploded Diagram 23

XI. Parts List 24

XII. Warranty 27

I. IMPORTANT SAFETY INSTRUCTIONS

⚠ WARNING: Read all instructions before using this treadmill.

It is important your treadmill receives regular maintenance to prolong its useful life. Failing to regularly maintain your treadmill may void your warranty.

⚠ DANGER

To reduce the risk of electric shock disconnect your treadmill from the electrical outlet prior to cleaning and/or service work.

DO NOT USE AN EXTENSION CORD:

DO NOT ATTEMPT TO DISABLE THE GROUNDED PLUG BY USING IMPROPER ADAPTERS OR IN ANY WAY MODIFY THE CORD SET.

- Install the treadmill on a flat level surface with access to a 220-240 volt (50/60Hz), grounded outlet.
- Do not operate treadmill on deeply padded, plush or shag carpet. Damage to both carpet and treadmill may result.
- Do not block the rear of the treadmill. Provide a minimum of 1 metre clearance between the rear of the treadmill and any fixed object.
- Place your unit on a solid, level surface when in use.
- When running, make sure the plastic clip is fastened on your clothing. It is for your safety, should you fall or move too far back on the treadmill.
- Keep hands away from all moving parts.
- Never operate the treadmill if it has a damaged power cord or plug. When damaged, these must be replaced by the manufacturer, its service agent or similarly qualified persons in order to avoid a hazard.
- Keep the cord away from heated surfaces.
- Do not operate where aerosol spray products are being used or where oxygen is being administered. Sparks from the motor may ignite a highly gaseous environment.
- Never drop or insert any object into any openings.

- The treadmill is intended for in-home use only and is not suitable for commercial environments.
- To disconnect, turn all controls to the off position, remove the safety key, and then remove the plug from the outlet.
- The pulse sensors are not medical devices. Various factors, including the user's movement, may affect the accuracy of heart rate readings. The pulse sensors are intended only as exercise aids in determining heart rate trends in general.
- Use the handrails provided; they are for your safety.
- Wear proper shoes. High heels, dress shoes, sandals or bare feet are not suitable for use on your treadmill. Quality athletic shoes are recommended to avoid leg fatigue.
- Before undertaking any type of exercise program, it is recommended that you consult a doctor.
- Injuries to health may result from incorrect or excessive training.
- This appliance is not intended for use by persons (including children) with reduced physical, sensory or mental capabilities, or lack of experience and knowledge, unless they have been given supervision or instruction concerning use of the appliance by a person responsible for their safety.
- **WARNING:** Heart rate monitoring systems may be inaccurate. If you feel faint stop exercising immediately.
- Children should not be allowed on or around the equipment, even when not in use.
- Children should be supervised to ensure that they do not play with this machine.
- Loose-fitting clothing or jewellery that could become an entanglement hazard should not be worn.
- Training shoes should be worn when using the equipment.
- Equipment must be used on a level and stable surface.
- All fixings should be checked before the equipment is used.
- All literature relating to the use of the equipment should be retained for future reference.
- Recommended operating temperature: 5-40°C.

! Remove the safety key after use to prevent unauthorized treadmill operation.

II. IMPORTANT ELECTRICAL INFORMATION

⚠ WARNING!

- Route the power cord away from any moving part of the treadmill including the elevation mechanism and transport wheels.
- **NEVER** remove any cover without first disconnecting AC power.
- **NEVER** expose this treadmill to rain or moisture. This treadmill is not designed for use outdoors, near a pool, or in any other high humidity environment.
- This is a high-power item; please do not share the same outlet with other high power machines such as, fridges, air conditioning etc. Please choose an outlet exclusively for the machine and make sure the fuse is 10A.

GROUNDING METHODS

This product must be grounded. Grounding provides the least resistance for electrical current and will reduce the risk of electric shock. The plug must be plugged into an appropriate outlet that is properly installed and grounded in accordance with all local codes and ordinances. Ensure that the product is connected to an outlet which contains the same configuration as the plug. Do not use an adaptor for this product.

This product is for use on a nominal circuit and has a grounding plug that looks like the plug illustrated in sketch A. Make sure that the product is connected to an outlet having the same configuration as the plug. No adapter should be used with this product.

⚠ WARNING!

1. NEVER use a ground fault circuit interrupt (GFCI) wall outlet with this treadmill. Route the power cord away from any moving part of the treadmill including the elevation mechanism and transport wheels.
2. NEVER operate the treadmill using a generator or UPS power supply.
3. NEVER remove any cover without first disconnecting power.
4. NEVER expose the treadmill to rain or moisture. This treadmill is not designed for use outdoors, near pools or in any other high humidity environment.

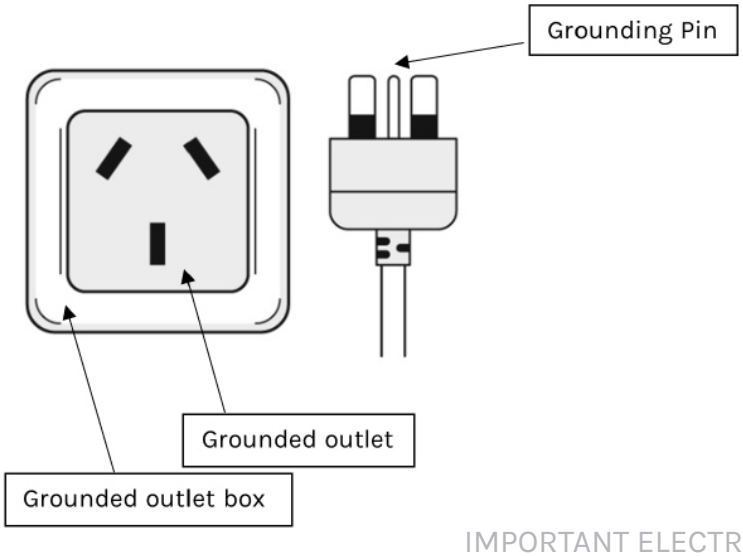

III. IMPORTANT OPERATING INSTRUCTIONS

- Understand that changes in speed and incline do not occur immediately. Set your desired speed on the display console and release the adjustment key. The display will obey the command gradually.

- Use caution while participating in other activities while walking on your treadmill, such as watching television, reading, etc. These distractions may cause you to lose balance or stray from walking in the centre of the belt; which may result in serious injury.

- This unit starts with at a very low speed. It is recommended to stand on the side rails and only step on the treadmill as it is moving on a slow speed. This will prolong the life of your motor and run the belt smoothly.

- Always hold on to handrail while making control changes.

- A safety key is provided with this machine. Remove the safety key will stop the walking belt immediately; the treadmill will shut off automatically. Inserting the safety key will reset the display.

- Do not use excessive pressure on console control keys. They are precision set to function properly with little finger pressure.

- Replace any defective components immediately. The machine must be kept out of use until repaired.

- Belt wear-in period: all treadmills make a certain type of thumping noise due to the belt riding over the rollers, especially new treadmills. This noise will diminish over time, although may not completely go away. The belt will stretch over time, causing it to ride smoother over the rollers.

IV. ASSEMBLY HARDWARE

The following figure shows the scatter diagram of the parts installed in the whole machine table. Open the packaging box, and you can remove the following parts from the box.

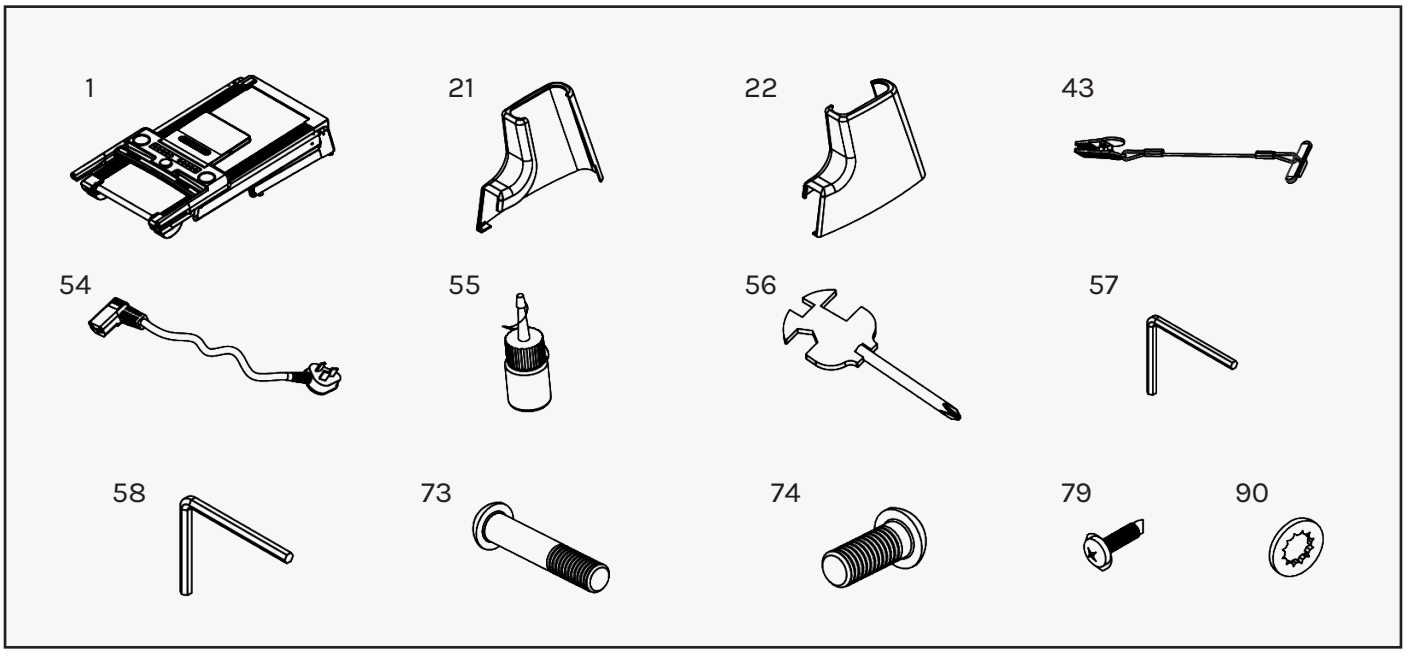

PARTS LIST

Key No.	Description	Specs	Qty.
1	Main Frame Assembly		1
21	Left Bottom Side Cover		1
22	Right Bottom Side Cover		1
43	Security Keylock		1
54	Power Line		1
55	Oil Bottle		1
56	Wrench w/ Screwdriver	S = 13, 14, 15	1
57	5# Hexagon Wrench	5mm	1

Key No.	Description	Specs	Qty.
58	6# Hexagon Wrench	5mm	1
73	Inner Hexagonal Flat Round Head Screw	M8*42	2
74	Inner Hexagonal Flat Round Head Screw	M8*16	4
79	Cross Groove Disc Head with Cushion Self-attack Drill Screw	ST4.2*19	2
61	Internal Serrated Lock Washer	8	6

ASSEMBLY TOOLS:

5# Hexagon wrench 5mm 1pcs.
Wrench w/Screwdriver = 13, 14, 15 1pcs.

⚠ NOTE:

Do not connect power before completing assembly.

V. ASSEMBLY INSTRUCTIONS

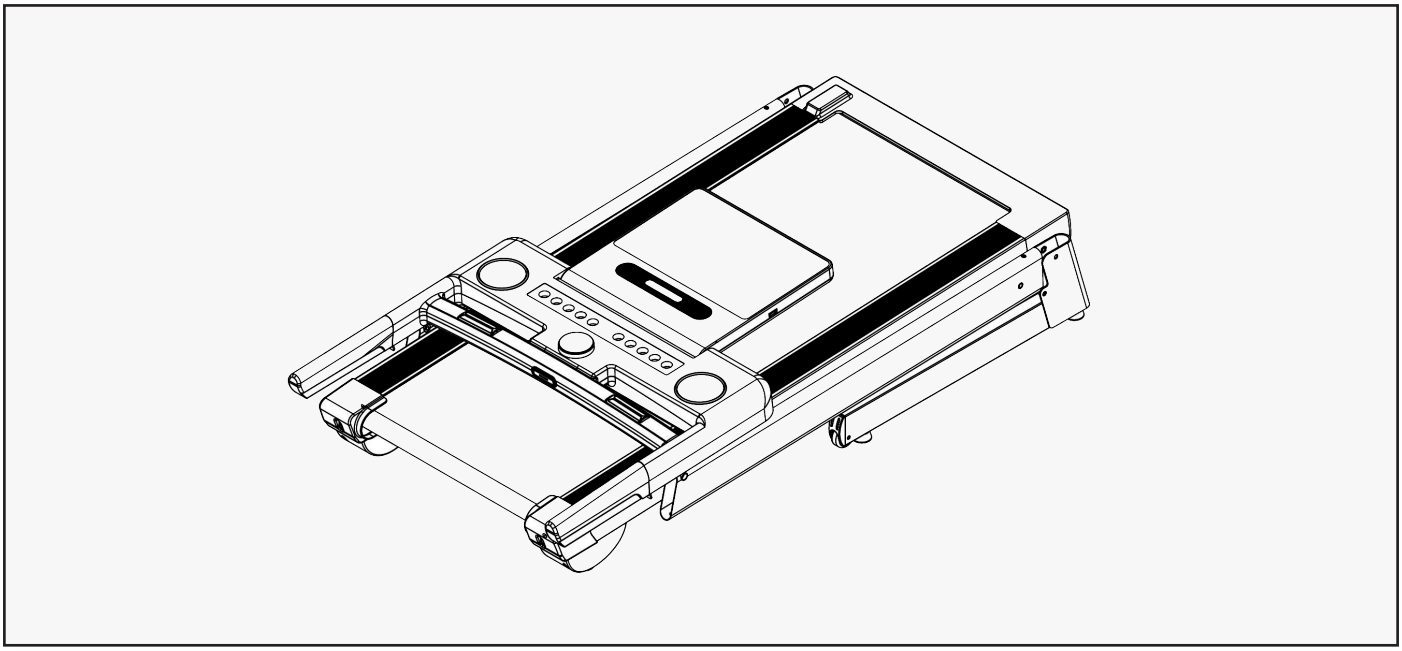

STEP 1

1. Open the carton and remove the above parts from the box.

2. Place the main frame onto level ground.

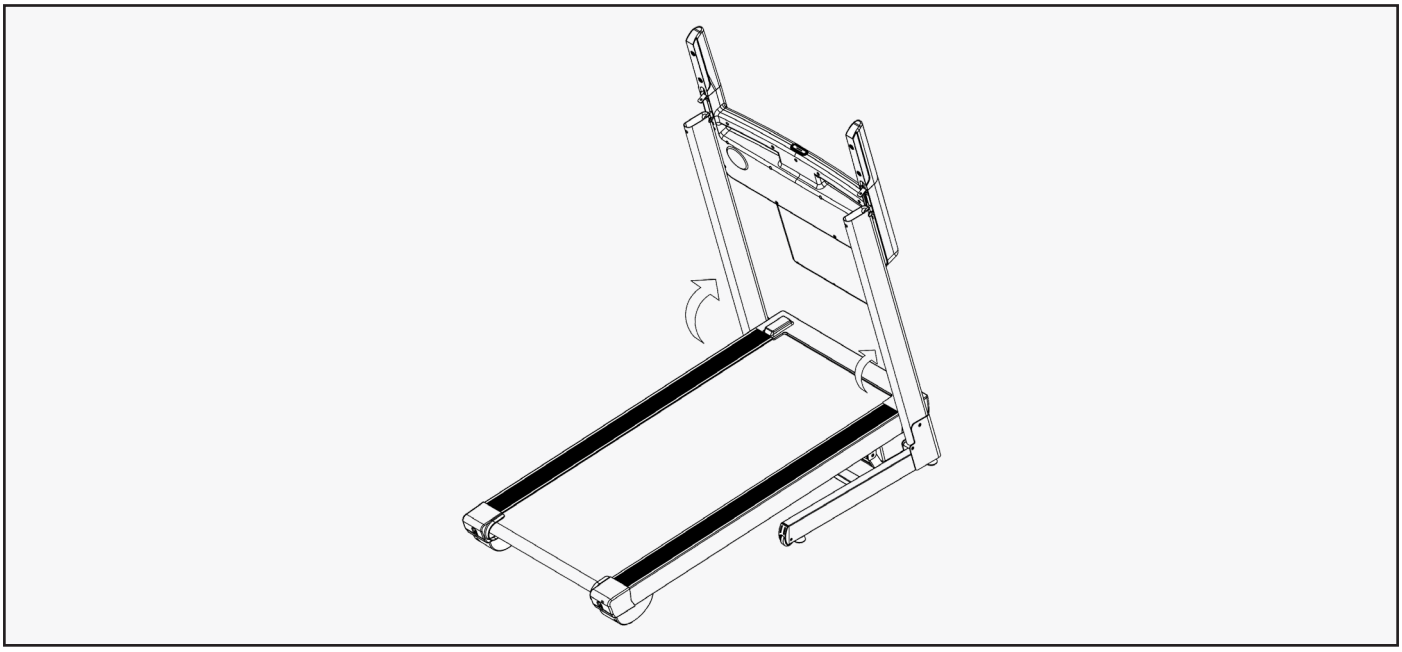

STEP 2

1. Raise the display and the upright columns up, as shown in image.

! **NOTE:** Support the upright with your hands to prevent it falling and causing injury.

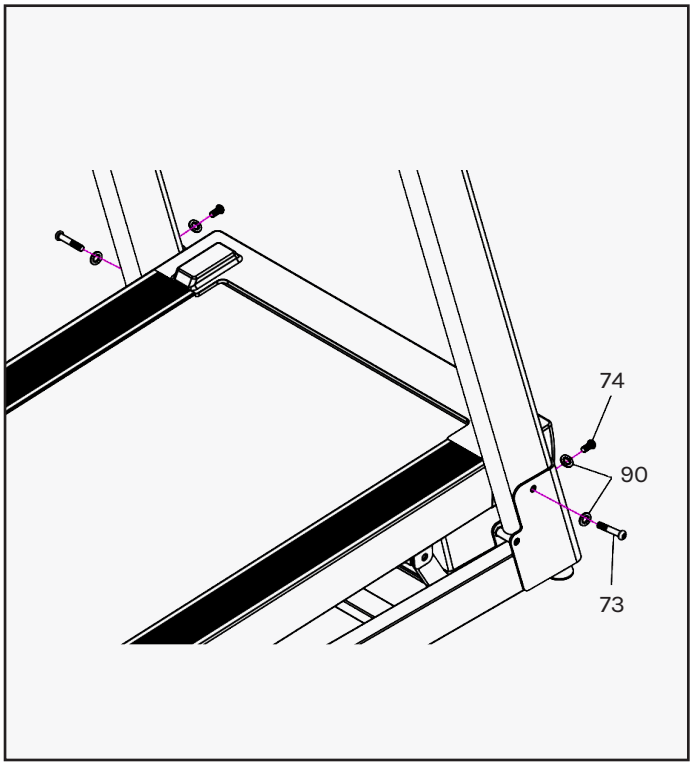

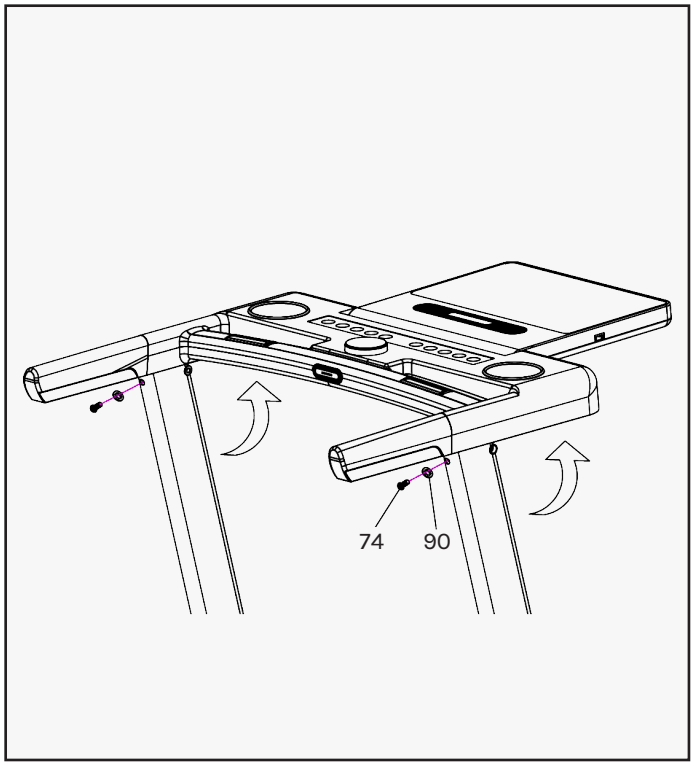

STEP 3

1. Use 5# hexagon wrench to secure M8*42 hexagon round head screw (73) and internal sawtooth lock gasket (90) on the upright column to the main frame base.

2. Use 5# hexagon wrench to secure M8*16 hexagon round head screw (74) and inner sawtooth lock washer (90) on the upright column to the main frame base.

3. Repeat the installation step on the other side.

NOTE:

Support the upright with your hands to prevent it falling and causing injury.

STEP 4

1. Carefully raise the display into the position as pictured.

2. Do not damage the display wire when doing so.

3. Using a 5# inner hexagon wrench, secure M8*16 hexagon round head screw (74) and inner sawtooth lock washer (90) on the upright column and display.

4. Repeat the same steps on the other side.

NOTE:

When un-folding, do not press the cable line inside the column and check whether the wire is well connected. Lock the screw by hand first to avoid the column and the display from falling down.

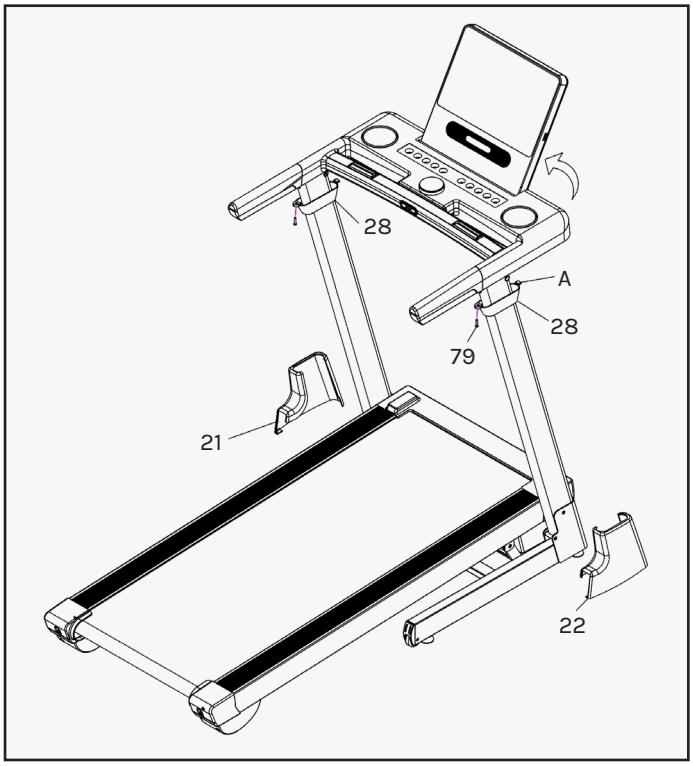

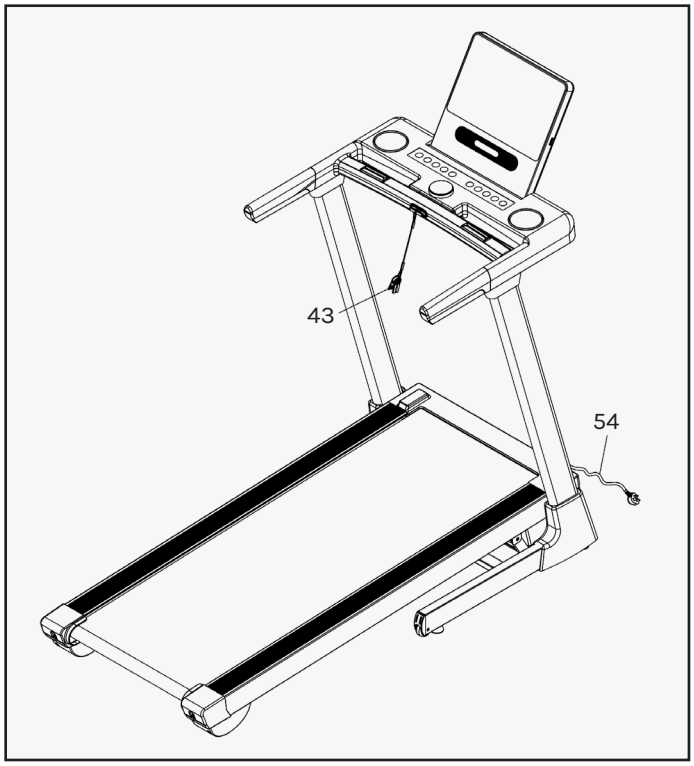

STEP 5

1. First secure the armrest cover (28) into the display and lock with drill screw (79) with the cross wrench.

2. Repeat the step on the other side.

3. Push the left and right base cover (21/22) from the top to the column base.

4. Check all the bolts are fully tightened.

STEP 6

1. Place the safety lock (43) onto the display safety key slot.

2. Then plug power cord (54) to a main power point and you can now use the treadmill.

VI. FOLDING AND UNFOLDING

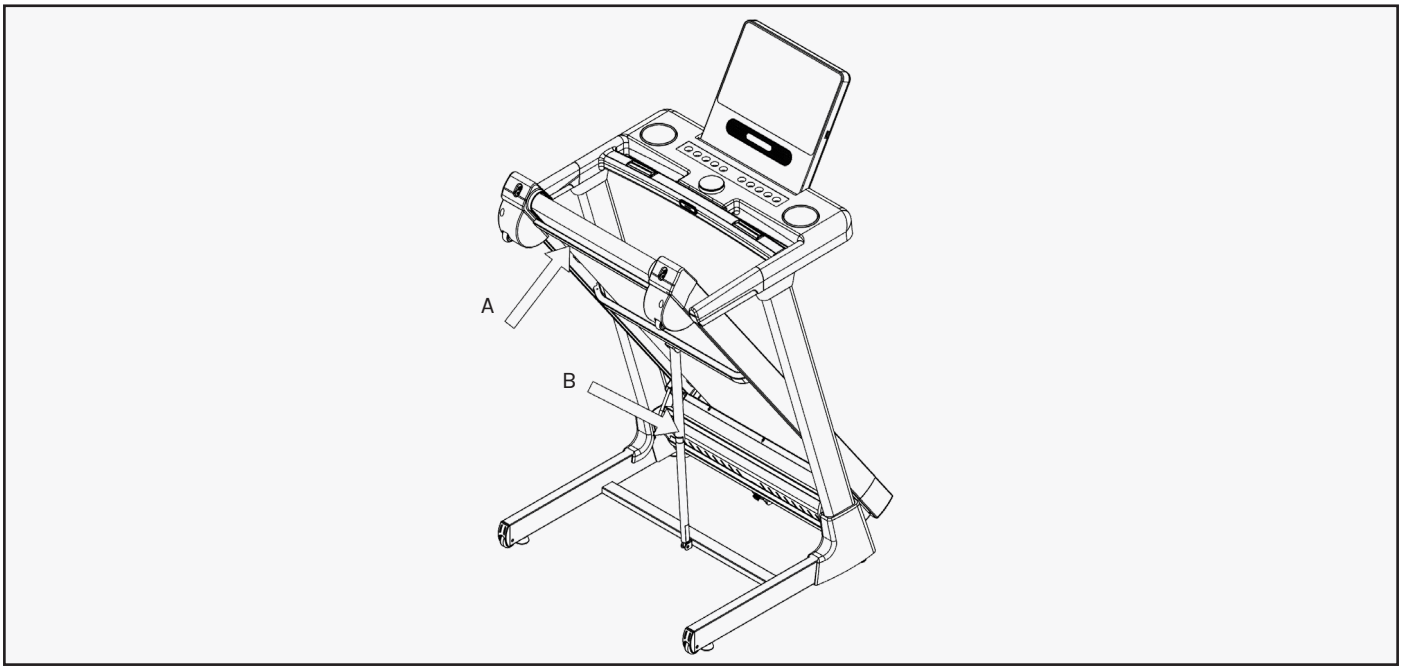

FOLDING

Place your hand on position (A), then pull up the base frame until you hear the click sound emitted when the air pressure bar (B) is locked into the round tube.

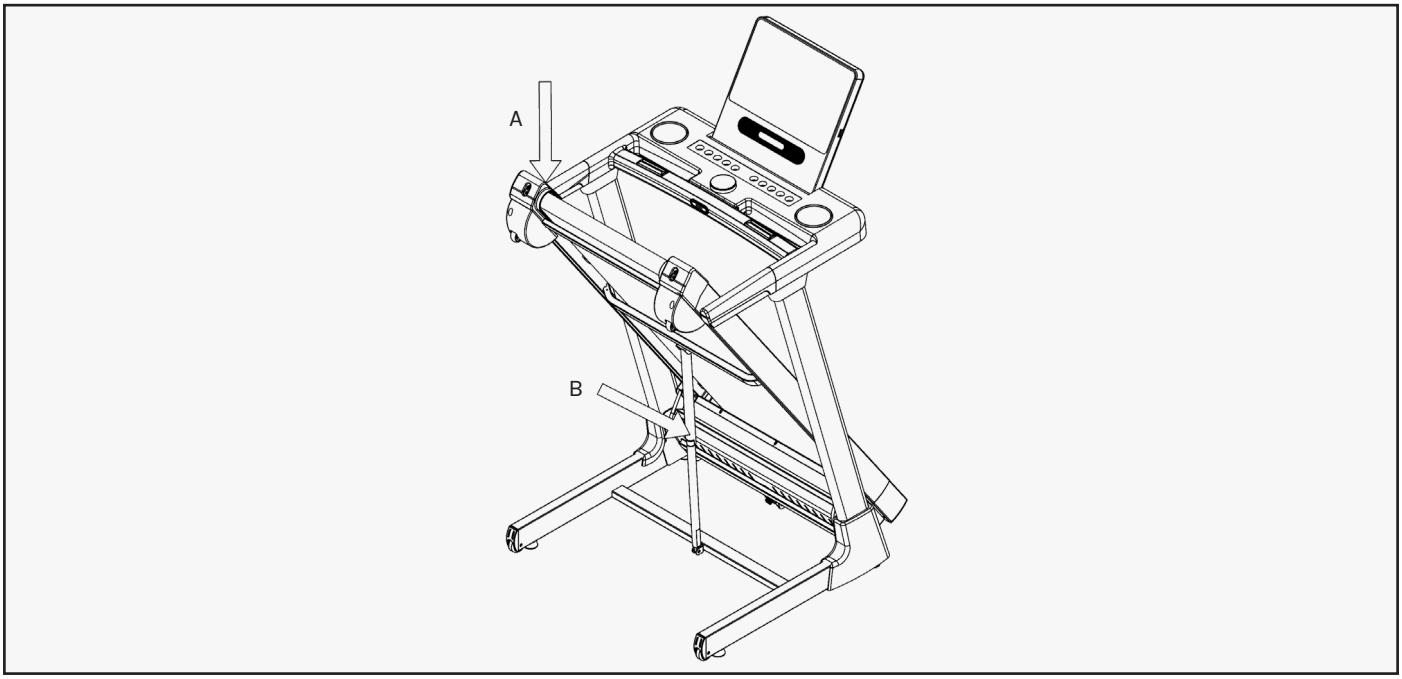

UNFOLDING

Whilst supporting position (A) with our hand, gently push position (B), the marked area on the air pressure bar, with your foot. The base frame will descend automatically. (Please keep people and pets away from the machine during descent).

VII. OPERATION GUIDE

DISPLAY

1. **Incline/Calorie Window**: Displays moving calories or incline level. The corresponding element is displayed when the corresponding icon is illuminated.

2. **Time Window**: Displays exercise time.

3. **Speed Window**: Show the motion speed.

4. **Pulse/Distance Window**: Display the running distance or pulse reading. The corresponding element is displayed when the corresponding icon is illuminated.

5. **Dot Matrix Window**: Show the track.

6. **Loop Number Window**: Display lap number.

BUTTON FUNCTION

1. **"PROG." Button**: Use this button to choose the program. The selection order is manual mode, P01-99, and FAT.

2. **MODE Button**: Use this button as selection (enter) key.
   a. During standby mode, use MODE to choose between countdown mode, from TIME countdown, DISTANCE countdown and CALORIE.
   b. Use the Mode to navigate through parameter selection for "Sex", "Age", "Height" and "Weight".

3. **START Button**: Press Start to turn on display and start machine.

4. **STOP Button**: Press this key during exercise and the treadmill slowly stops and enter into pause mode. Your counts and settings will remain on pause mode. You can press start again to resume work out. If you press the stop button again in Pause mode, the readings will be cleared to 0:00.

5. **SPEED▲,▼**: Increase or decrease speed when exercising. Sets parameters when stopped.

6. **SPEED (8)**: Quick speed adjustment key.

7. **INCLINE ▲,▼**: Increase or decrease incline levels when exercising. Sets parameters when stopped.
8. **INCLINE (8)**: Quick incline adjustment key.

9. **SHUTTLE KNOB**: Synchronize the data of display. Short press to start/pause, long press to stop, clockwise rotation speed increases, counterclockwise rotation speed decreases.
   - When any button is pressed effectively, there will be a prompt tone, and when the button is used for parameter adjustment, there will be a long tone prompt. There will be no prompt tone when the button is pressed ineffectively.

MAIN FUNCTIONS

On startup, all windows will light up for 2 seconds, and then enter the standby state.

1. **Quick Start (Manual Mode)**: Put the safety key on the display and press the start button. After the 3 seconds countdown, the treadmill will start moving at the lowest speed. Adjust the speed by pressing the SPEED ▲, ▼ button to adjust the speed. Press INCLINE ▲, ▼ button to adjust the incline of the deck. To stop, press the stop button and it will pause the work-out. Press stop to clear settings back to 0:00.

2. **Countdown Mode**: Press the MODE button to cycle options: timer countdown, distance countdown, calories countdown. The default value corresponds to the window and flashing display. At this point, the SPEED buttons serve as plus and minus functions to adjust to the desired value for timer, distance or calories countdown. When settings are set, press the START, you can change speed/incline with SPEED/INCLINE buttons once again. When the countdown reaches 0, the machine will stop. You can also directly press the STOP button or disconnect the safety key to stop.

3. **Program Mode**: Press the "PROGRAM" button and select any one of the built-in programs. "Time" will flash when you navigate through the programs. You can change the exercise time using SPEED▲, ▼ (INCLINE ▲, ▼) buttons.

   The built-in programs are divided into 20 segments with a running time of set time/20. Press the START to run the program after adjusting your time. Again, there will be a 3 second countdown, the machine will adjust the speed/incline to the first segment of the program. It will navigate through all the segments and change speed/incline automatically.

   Once the program segment is finished the treadmill will slowly stop. During operation, you can adjust SPEED▲, ▼, INCLINE ▲, ▼ but it will automatically adjust to the program default value in the next segment. You can also directly press the "STOP" button to stop running the program.

   - The corresponding window at the end of the mode and the program motion flashes with the 15-sound prompts, after which all the data clear 0 goes into the standby state.

HEART RATE

When holding the hand pulse with two hands, the pulse window will show your heart rate after 5 seconds. To increase accuracy, please check heart rate after holding your hands on the sensors for more than 30 seconds when the machine stops. Please turn to the final page of document for more information about our pulse sensors.

(!) The heart rate data is for reference purpose only and should not be used for medical purposes. Please turn to the end of this document for further detail.

BODY FAT TEST FUNCTION

1. In the standby state, press "PROGRAM" until the window shows "FAT".

2. Press the "MODE" button to input data into parameters "SEX/AGE/HEIGHT/WEIGHT". The corresponding window displays "-1-", "-2-", "-3-" and "-4-". For each parameter category selected, press SPEED▲, ▼ to adjust the parameter value.

3. When adjusting all the parameters, press the MODE key again. The corresponding window will display "-5-" and "- - -" respectively, indicating that the pending test state is entered. Hold the hand pulse sensors with both hands and it will show your BMI data after 5 seconds.

Input parameters display and set range

Parameter Category	Windows Default	Set the Scope	emarks
Sex (-1-)	0 (Male)	0—1	0= Male and 1= Female
Age (-2-)	25 Years old	10-99 Years old	
Height (-3-)	170cm	100—240cm	
Body Weight (-4-)	70kg	20—16kg	

Body Fat Index control

Body Fat Index (BMI)	Result
<19	Under Weight
19--26	Normal Weight
27--30	Overweight
>30	Obese

SLEEP FUNCTION

The treadmill automatically enters sleep mode after 10 minutes of inactivity. Press any key on the display to wake the treadmill.

SAFETY KEY FUNCTION

Any time the safety lock is disconnected, the treadmill will stop running, and all data is cleared to 0. All windows will display "- - -". Safety key must be placed back into the safety key slot to start the machine.

Data Display and Setting Range

	Range	Default Mode	The default value of program	Set the scope
Speed	1-16km	--------	--------	1-16km
Incline	15	--------	--------	0—15
Time	0:00—99:59	30:00	30:00	5:00—99:00
Distance	0.00km—99.9km	1.00km	--------	0.5km—99.9km
Calories	0Kcl—999Kcl	50Kcl	--------	10Kcl—990Kcl

AUDIO FUNCTION

1. MP3 function, input the external sound source through the MP3 line through the treadmill power amplifier from the loudspeaker.

2. Bluetooth music function, search for the Bluetooth name FS-xxxxxx-A (where xxxxxx is the Bluetooth serial number) through the mobile phone. After the successful matching connection, the mobile phone music is played from the speaker after the treadmill power amplifier.

15 Built-in Data Sheets for 20 paragraphs

PROGRAM	TIME	To set time/20 time = running time of each time period																			
		1	2	3	4	5	6	7	8	9	10	11	12	13	14	15	16	17	18	19	20
P01	SPEED	2	3	3	4	5	3	4	5	5	3	4	5	4	4	4	2	3	3	5	3
	INCLINE	1	1	2	2	2	3	3	3	2	2	1	2	2	1	1	3	3	2	2	2
P02	SPEED	2	4	4	5	6	4	6	6	6	4	5	6	4	4	4	2	2	5	4	2
	INCLINE	1	2	2	2	2	3	3	2	2	2	2	2	3	3	3	4	4	3	2	2
P03	SPEED	2	4	4	6	6	4	7	7	7	4	7	7	4	4	4	2	4	5	3	2
	INCLINE	2	3	3	2	2	3	3	3	2	2	2	2	4	4	4	6	6	3	2	2
P04	SPEED	3	5	5	6	7	7	5	7	7	8	8	5	9	5	5	6	6	4	4	3
	INCLINE	2	3	3	2	2	3	3	3	2	2	2	2	4	4	4	6	6	3	2	2
P05	SPEED	2	4	4	5	6	7	7	5	6	7	8	8	5	4	3	3	6	5	4	2
	INCLINE	3	3	3	4	4	5	5	5	4	4	4	4	5	5	3	3	3	2	2	2
P06	SPEED	2	4	4	4	5	6	8	8	6	7	8	8	6	4	4	2	5	4	3	2
	INCLINE	3	5	5	5	4	4	4	3	3	3	3	4	4	4	3	3	3	4	3	2
P07	SPEED	2	3	3	3	4	5	3	4	5	3	4	5	3	3	3	6	6	5	3	3
	INCLINE	4	4	4	4	3	3	6	6	6	7	7	8	8	9	9	6	6	5	4	4
P08	SPEED	2	3	3	6	7	7	4	6	7	4	6	7	4	4	4	2	3	4	4	2
	INCLINE	4	5	5	5	6	6	6	7	8	9	9	9	10	10	10	12	12	8	6	3
P09	SPEED	2	4	4	7	7	4	7	8	4	8	9	9	4	4	4	5	6	3	3	2
	INCLINE	5	5	5	6	6	6	4	4	6	6	5	5	8	8	9	9	9	7	4	2
P10	SPEED	2	4	5	6	7	5	4	6	8	8	6	6	5	4	4	2	4	4	3	3
	INCLINE	5	6	6	6	7	5	8	8	4	4	4	5	5	8	8	10	10	8	6	3
P11	SPEED	2	5	8	10	7	7	10	10	7	7	10	10	5	5	9	9	5	5	4	3
	INCLINE	4	5	3	2	6	6	2	2	2	2	2	4	5	6	3	2	5	5	2	0
P12	SPEED	3	4	9	9	5	9	5	8	5	9	7	5	5	7	9	9	5	7	6	3
	INCLINE	1	2	3	2	3	5	5	0	0	2	3	5	7	3	3	5	6	5	3	3
P13	SPEED	3	6	7	5	9	9	7	5	5	7	9	5	8	5	9	5	9	9	4	3
	INCLINE	3	3	5	6	5	3	3	7	5	3	2	0	0	5	5	3	2	3	2	1
P14	SPEED	2	2	4	5	6	5	4	3	2	1	2	3	4	5	6	5	4	3	2	1
	INCLINE	4	4	4	4	3	3	6	6	6	7	7	8	8	9	9	6	6	5	4	4
P15	SPEED	2	4	6	8	6	6	4	4	2	2	2	4	6	8	6	6	4	4	2	2
	INCLINE	3	3	3	4	4	5	5	5	4	4	4	4	5	5	3	3	3	2	2	2

VIII. EXERCISE GUIDE

PLEASE NOTE:

Before beginning any exercise program, consult your physician. This is important especially if you are over the age of 45 or individuals with pre-existing health problems.

The pulse sensors are not medical devices. Various factors, including the user's movement, may affect the accuracy of heart rate readings. The pulse sensors are intended only as an exercise aid in determining heart rate trends in general.

Exercising is great way to control your weight, improving your fitness and reduce the effect of aging and stress. The key to success is to make exercise a regular and enjoyable part of your everyday life.

The condition of your heart and lungs and how efficient they are in delivering oxygen via your blood to your muscles is an important factor to your fitness. Your muscles use this oxygen to provide enough energy for daily activity. This is called aerobic activity. When you are fit, your heart will not have to work so hard. It will pump a lot fewer times per minute, reducing the wear and tear of your heart.

So as you can see, the fitter you are, the healthier and greater you will feel.

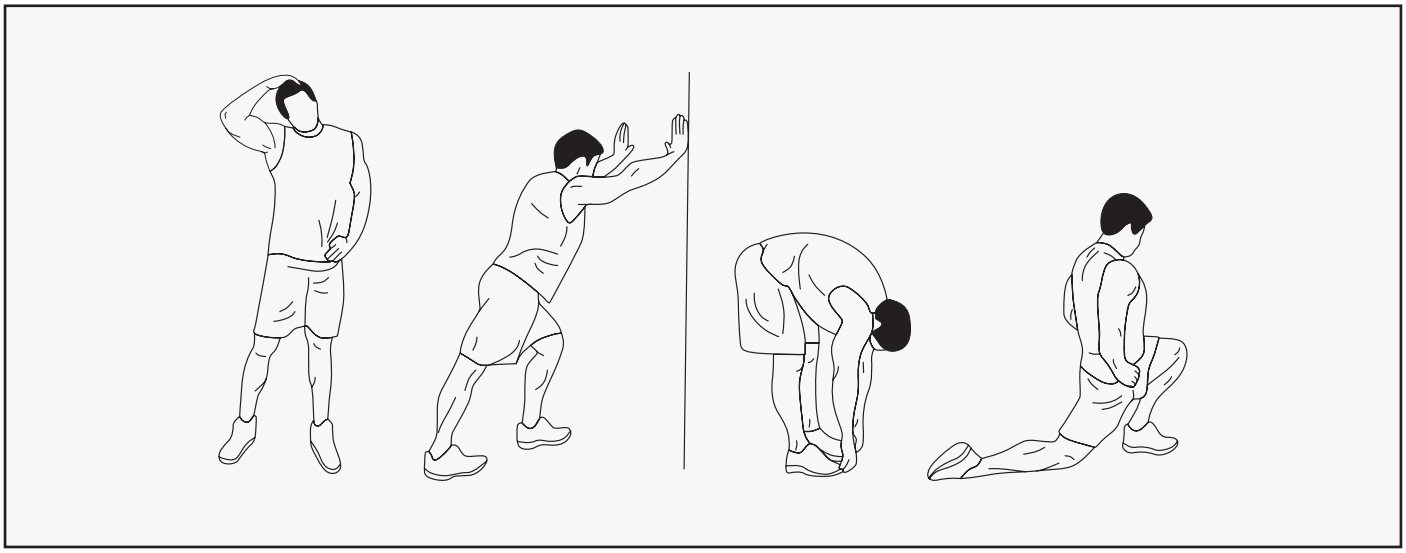

WARM UP

Start each workout with 5 to 10 minutes of stretching and some light exercises. A proper warm-up increases your body temperature, heart rate and circulation in preparation for exercise. Ease into your exercise.

After warming up, increase the intensity to your desired exercise program. Be sure to maintain your intensity for maximum performance. Breathe regularly and deeply as you exercise.

COOL DOWN

Finish each workout with a light jog or walk for at least 1 minute. Then complete 5 to 10 minutes of stretching to cool down. This will increase the flexibility of your muscles and will help prevent post-exercise problems.

WORKOUT GUIDELINES

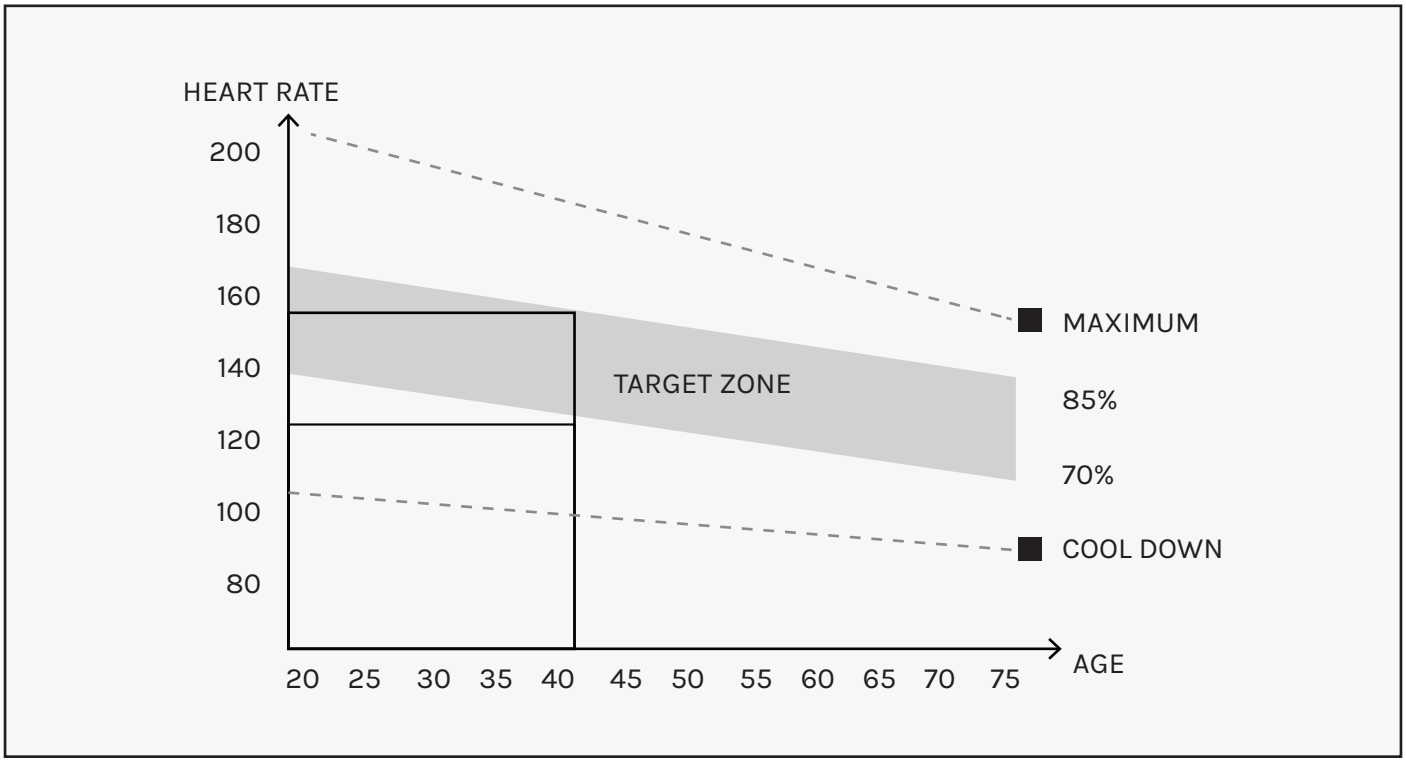

This is how your pulse should behave during general fitness exercise. Remember to warm up and cool down for a few minutes.

The most important factor here is the amount of effort you put in. The harder and longer you work, the more calories you will burn.

IX. MAINTENANCE INSTRUCTIONS

Reasonable cleaning/lubricating should be made to extend the life time of this unit. Performance is maximized when the belt and mat are kept as clean as possible.

⚠ WARNING:

- The mat/deck friction may lay a major role in the function and life of your treadmill and that is why we recommend you constantly lubricate this friction point to prolong the useful life of your treadmill. Failing to do this may void your warranty.
- Unplug power cord before maintenance.
- Stop treadmill before folding.

---

1. GENERAL CLEANING

- Use a soft, damp cloth to wipe the edge of the belt and the area between the belt edge and frame. A mild soap and water solution along with a nylon scrub brush will clean the top of the textured belt. This task should be done once a month. Allow to dry before using.
- On a monthly basis, vacuum underneath your treadmill to prevent dust build up. Once a year, you should remove the black motor shield and vacuum out dirt that may accumulate.

2. GENERAL CARE

- Check parts for wear before use.
- Pay particular attention to the fixing knobs and make sure they are tight.
- Always replace the mat if worn and any other defective parts.
- If in doubt do not use the treadmill and contact us.

! **Take care to protect carpets and floor** in case of leakages. This product is a machine that contains moving parts which have been greased / lubricated and could leak.

3. BELT/DECK/ROLLER LUBRICATION

The mat/deck friction may play a major role in the function and life of your treadmill and that is why we recommend you constantly lubricate this friction point to prolong the useful life of your treadmill. You should apply lubrication after approximately the first 30 hours of operation.

We recommend lubrication of the deck according to the following timetable:

- Light use (less than 3 hours per week) every 6 months.
- Medium use (3-5 hours a week) every 3 months.
- Heavy use (more than 5 hours per week) every 6-8 weeks.

See below procedures for lubricating:

1. Use a soft, dry cloth to wipe the area between the belt and deck.
2. Spread lubricant onto the inside surface of belt and deck evenly (make sure the machine is turned off and power is disconnected).
3. Periodically lubricate the front and rear rollers to keep them at their peak performance. If the treadmill belt/deck/roller is kept reasonably clean it is possible to expect over 1200 hours before relubricating is necessary.

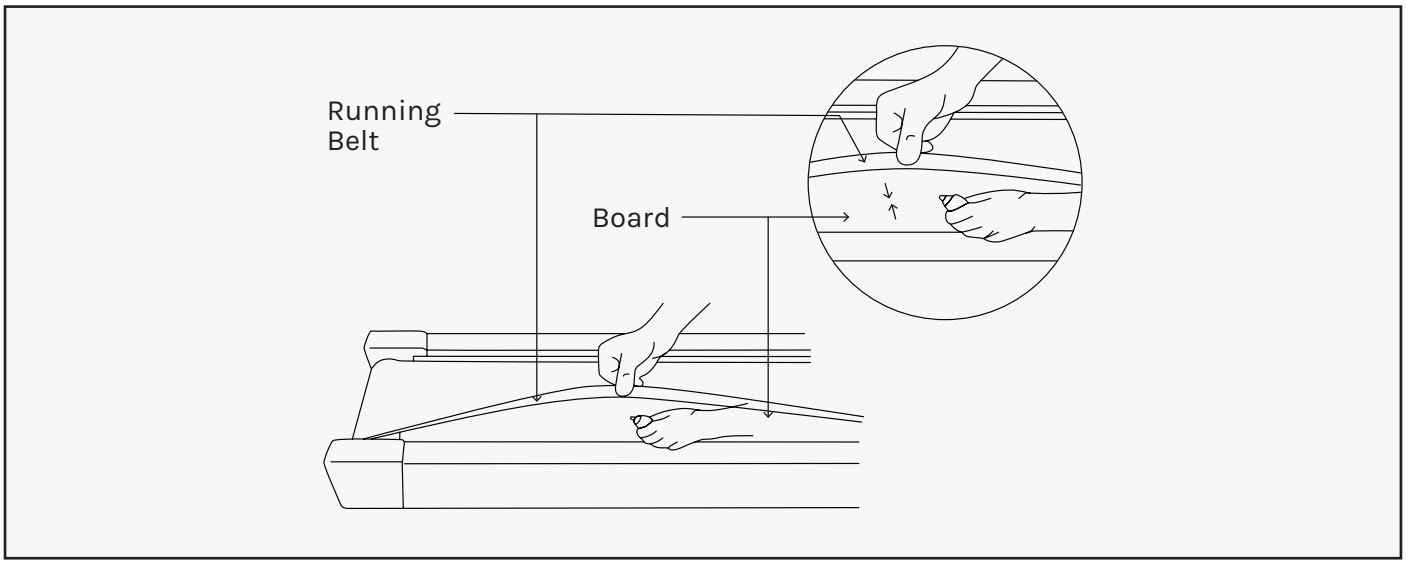

Video Tutorial Available at: **http://youtu.be/cP9NtFHfWlc**
Lifespan Fitness YouTube Channel: **http://www.youtube.com/user/treadmillsvideos**

4. HOW TO CHECK THE RUNNING MAT FOR PROPER LUBRICATION

1. Disconnect the main power supply.
2. Fold the treadmill up into the storage position.
3. Feel the underside surface of the running mat.

If the surface is slick when touched, then no further lubrication is needed.
If the surface is dry to the touch, apply a suitable silicone lubricant.

We recommend that you use a silicone based spray to lubricate your treadmill. This can be purchased directly from us or any hardware store.

Video Tutorial Available at: **http://youtu.be/cP9NtFHfWlc**
Lifespan Fitness YouTube Channel: **http://www.youtube.com/user/treadmillsvideos**

5. ADJUSTING THE RUNNING BELT

Place treadmill on a level surface. Run treadmill at approximately 4km/h, checking the running condition.

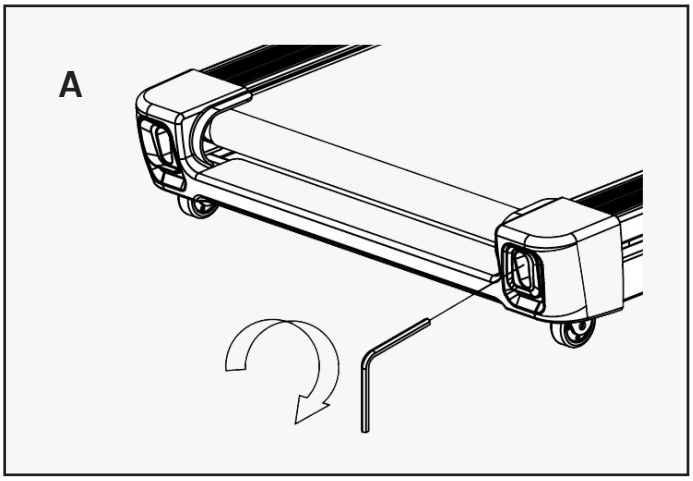

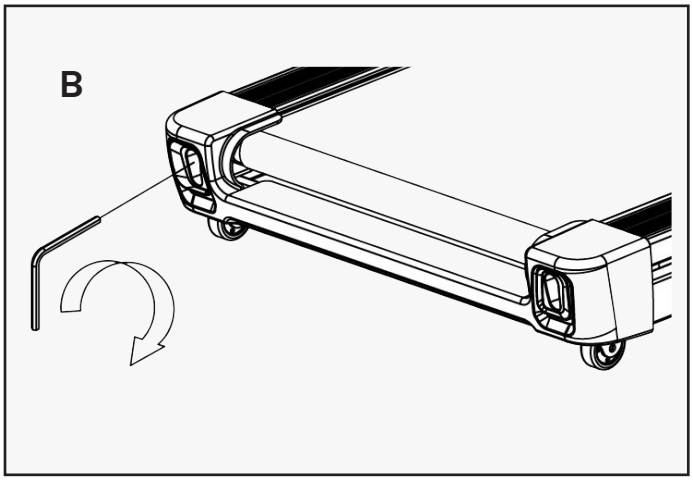

If the belt has drifted to the right: Whilst the treadmill is running at 4km/h, carefully turn the right adjusting bolt 1/4 turn clockwise. Then monitor treadmill until the belt centers. Repeat until the belt correctly centers.

See Picture A

If you have over adjusted the belt and it drifts to the right, carefully turn the right adjusting bolt anticlockwiseuntil the belt centers.

If the belt has drifted to the left: Whilst the treadmill is running at 4km/h, carefully turn the left adjusting bolt 1/4 turn clockwise. Then monitor treadmill until the belt centers. Repeat until the belt correctly centers.

See Picture B

If you have over adjusted it, carefully turn the left adjusting bolt anticlockwiseand until the belt centers.

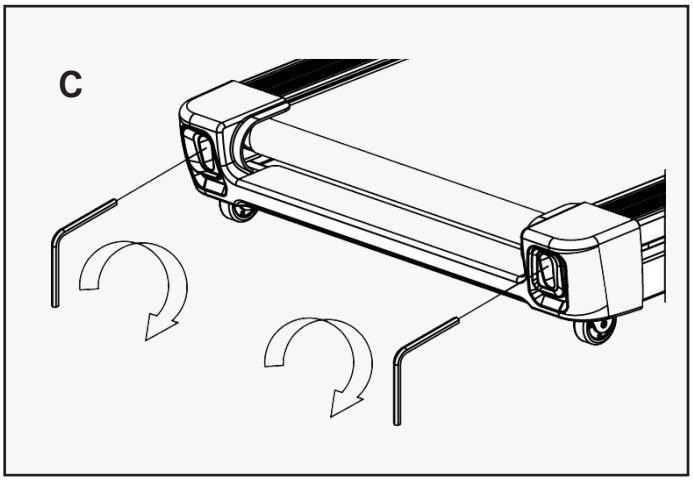

To adjust the tightness of the belt: Turn the treadmill off. Turn both the left and right adjusting bolts 1/4 turn clockwise. Repeat until the belt correctly tightens.

See Picture C

If the belt is over tightened, simply do the opposite to loosen.

NOTE:

When properly tightened,you should be able to peel the very edge of the side of the belt up approximately 2 inches. However, this is a rough reference and not all treadmills are the same. Some treadmills that have longer belts may give different measurements for correct belt tightness.

Simply, if the belt begins to slip during use, this is an indication that the belt still needs tightening.

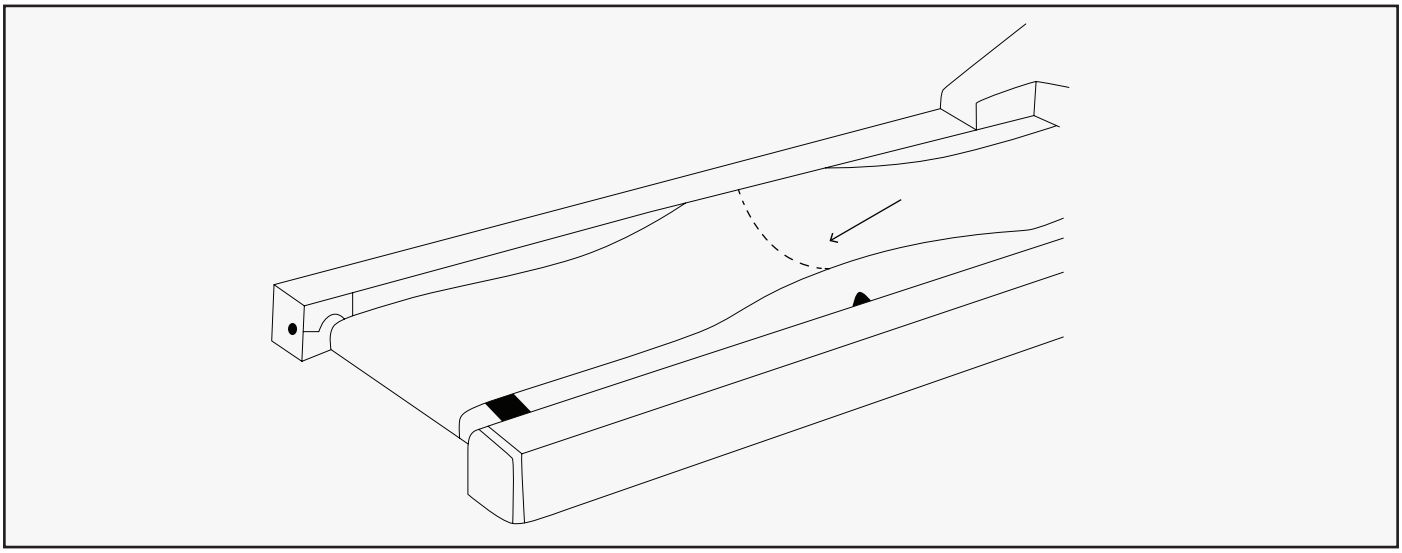

Video Tutorial Available at: **http://youtu.be/vllsamTSvvA**
Lifespan Fitness YouTube Channel: **http://www.youtube.com/user/treadmillsvideos**

X. EXPLODED DIAGRAM

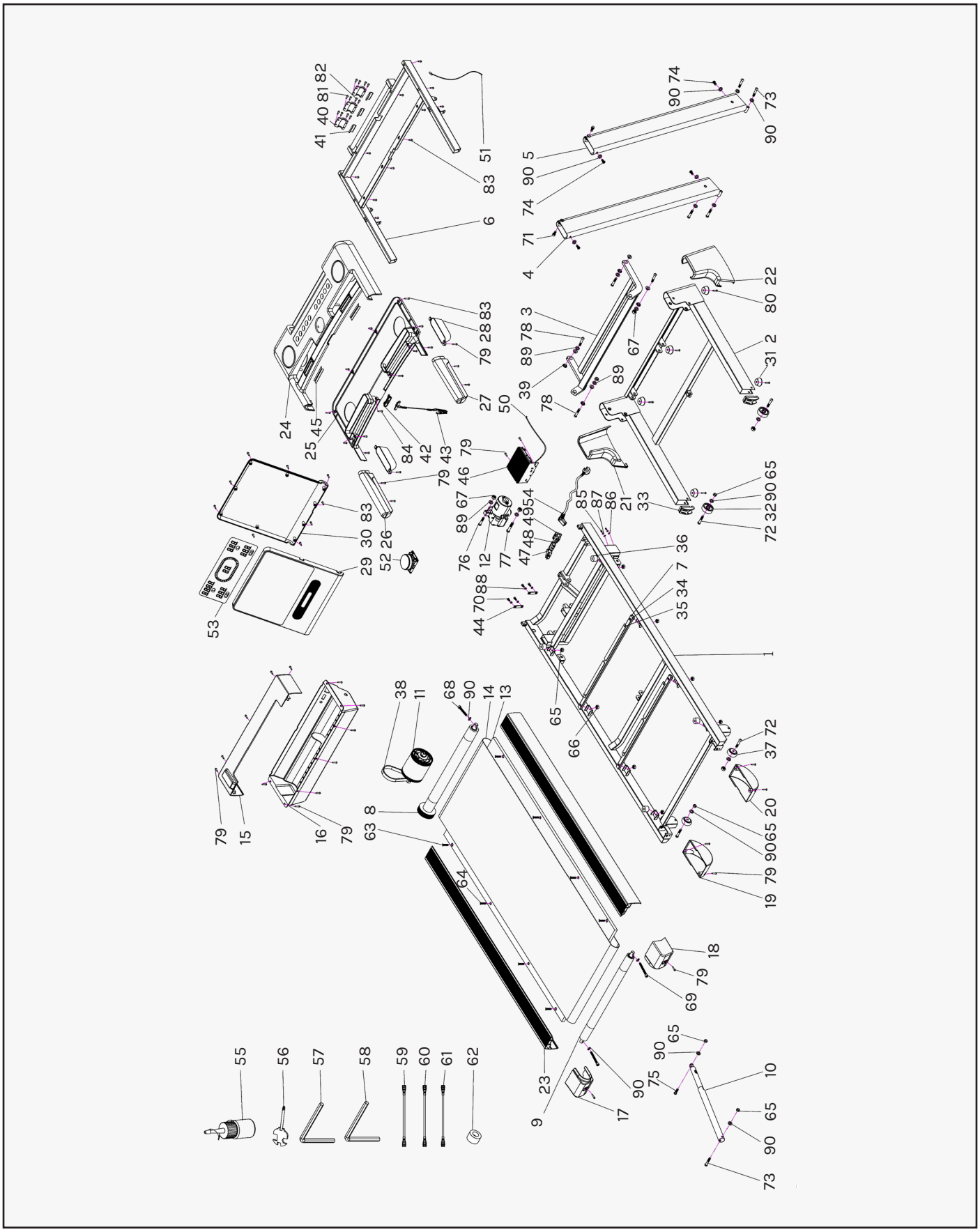

XI. PARTS LIST

Key No.	Description	Specs.	Qty.
1	Main Frame Assembly		1
2	Base Assembly		1
3	Incline Frame Assembly		1
4	Left Upright Assembly		1
5	Right Upright Assembly		1
6	Display Frame Assembly		1
7	Running Board Strengthening Pipe		2
8	Front Roller		1
9	Rear Roller		1
10	Cylinder		1
11	Brushless Motor		1
12	Incline Motor		1
13	Running Board		1
14	Running Belt		1
15	Motor Cover		1
16	Lower Motor Cover		1
17	Left Rear-guard Angle		1
18	Right Rear-guard Angle		1
19	Left Roller Shield		1
20	Right Roller Shield		1
21	Left Base Cover		1
22	Right Base Cover		1
23	Side Rail		2
24	Electronic Table Upper Cover		1
25	Electronic Table Lower Cover		1

Key No.	Description	Qty.
26	Left Foaming Armrest	1
27	Right Foaming Armrest	1
28	Handlebar Cover	2
29	Screen Panel	1
30	Panel Rear Cover	1
31	Foot Pad	5
32	Transportation Wheel	2
33	Roller Cover	2
34	Nylon Isolation Pad	4
35	Strengthen Rod Buffer Pad	4
36	Cushion	4
37	Wheel	2
38	Motor Belt	1
39	Interval Casing	8
40	Shingle Pressing Plate	3
41	Tile	3
42	Safety Lock Base	1
43	Safety Lock Switch	1
44	Motor Fixed Sheet	2
45	Pulse Sensors	4
46	Lower Controller	1
47	Overload Protector	1
48	Mains Switch	1
49	Power Supply Socket	1
50	Cable	1
51	Cable	1
52	Adjustable Unit	1

Key No.	Description	Specs.	Qty.
53	Electronic Meter		1
54	Power Line		1
55	Silicon Oil Bottle		1
56	Wrench w/ Screwdriver		1
57	5 # Hexagon Wrench		1
58	6 # Hexagon Wrench		1
59	AC Single Line		1
60	Blue Single Line		1
61	Brown Single Branch Line		1
62	Magnet Ring		1
63	Internal Hexagonal Head Screw	M8*45	4
64	Internal Hexagonal Head Screw	M6*40	4
65	Type 1 non-metal insert Hexagonal Locking Nut	M8	10
66	Type 1 non-metal insert Hexagonal Locking Nut	M6	4
67	Type 1 non-metal insert Hexagonal Locking Nut	M10	4
68	Inner Hexagonal Cylindrical Screw	M8*40	1
69	Inner Hexagonal Cylindrical Screw	M8*60	2
70	Inner Hexagonal Cylindrical Screw	M6*15	4
71	Inner Hexagonal Cylindrical Screw	M8*25	2
72	Inner Hexagonal Flat Round Head Screw	M8*40	4

Key No.	Description	Specs.	Qty.
73	Inner Hexagonal Flat Round Head Screw	M8*42	5
74	Inner Hexagonal Flat Round Head Screw	M8*16	4
75	Inner Hexagonal Flat Round Head Screw	M8*25	1
76	Inner Hexagonal Flat Round Head Screw	M10*42	1
77	Inner Hexagonal Flat Round Head Screw	M10*55	1
78	Inner Hexagonal Flat Round Head Screw	M10*35	4
79	Cross Groove Disc Head with Padded Self-tapping Drill Screws	4.2 * 15 with Pads	26
80	Cross Groove Disc Head with Padded Self-tapping Drill Screws	4.2 * 25 with Pads	5
81	Cross Slot Disc Head Tapping Screw	4.2*15	6
82	Cross Slot Disc Head Tapping Screw	4.2*20	6
83	Cross Slot Disc Head Tapping Screw	4.2*13	27
84	Cross Head Self-drilling Screw	4.2*19	6
85	Cross Pan Head Screw	M5*8	2
86	Internal Serrated Lock Washer	5	2
87	Standard-type Spring Washer	5	2

Key No.	Description	Specs.	Qty.
88	Standard-type Spring Washer	6	4
89	Internal Serrated Lock Washer	10	6
90	Internal Serrated Lock Washer	8	17

XII. WARRANTY

AUSTRALIAN CONSUMER LAW

Many of our products come with a guarantee or warranty from the manufacturer. In addition, they come with guarantees that cannot be excluded under the Australian Consumer Law. You are entitled to a replacement or refund for a major failure and compensation for any other reasonably foreseeable loss or damage.

You are entitled to have the goods repaired or replaced if the goods fail to be of acceptable quality and the failure does not amount to a major failure. Full details of your consumer rights may be found at **www.consumerlaw.gov.au**.

Please visit our website to view our full warranty terms and conditions:
http://www.lifespanfitness.com.au/warranty-repairs

WARRANTY AND SUPPORT

Any claim against this warranty must be made through your original place of purchase.
Proof of purchase is required before a warranty claim may be processed.

If you have purchased this product from the Official Lifespan Fitness website, please visit
https://lifespanfitness.com.au/warranty-form

For support outside of warranty, if you wish to purchase replacement parts or request a repair or service, please visit h**ttps://lifespanfitness.com.au/warranty-form** and fill in our Repair/Service Request Form or Parts Purchase Form.

Scan this QR code with your device to go to **lifespanfitness.com.au/warranty-form**

LIFESPAN FITNESS

WWW.LIFESPANFITNESS.COM.AU