Reformer 2 Safety Rehabilition Treadmill

USER MANUAL

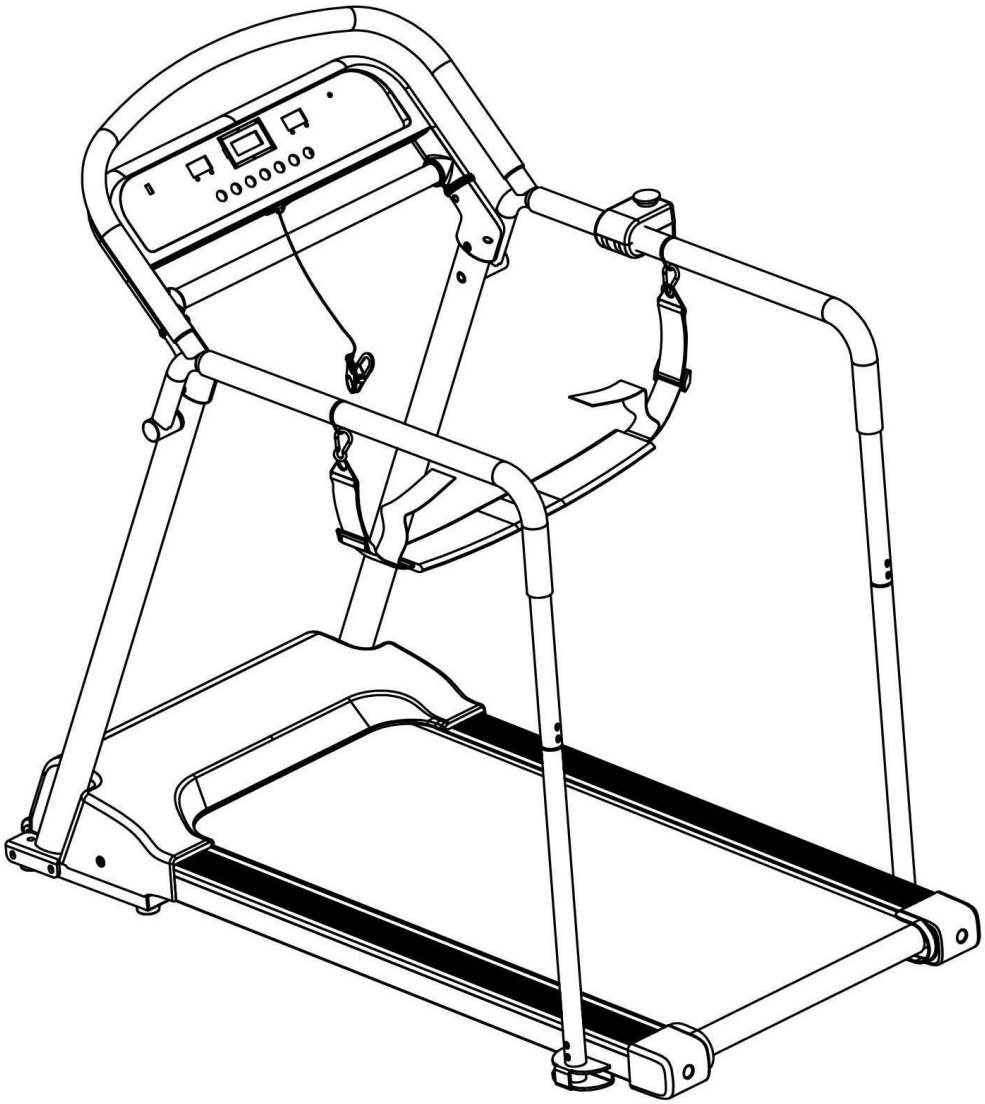

Product may vary slightly from the item pictured due to model upgrades.

Read all instructions carefully before using this product.
Retain this owner's manual for future reference.

NOTE:
This manual may be subject to updates or changes. Up to date manuals are available through our website at www.lifespanfitness.com.au

TABLE OF CONTENTS

I. Important Safety Instructions 03

II. Important Electrical Information 05

III. Important Operating Instructions 06

IV. Assembly Instructions 07

V. Operation Guide 12

VI. Exercise Guide 17

VII. Maintenance Instructions 19

VIII. Replacing Motor Brushes 23

IX. Exploded Diagram 26

X. Parts List 27

XI. Trouble Shooting 29

XII. Warranty 30

XIII. Hand Pulse Technology 31

I. IMPORTANT SAFETY INSTRUCTIONS

⚠ WARNING: Read all instructions before using this treadmill.

It is important your treadmill receives regular maintenance to prolong its lifespan. Failing to regularly maintain your treadmill may void your warranty.

⚠ DANGER

To reduce the risk of electric shock, disconnect your treadmill from the electrical outlet prior to cleaning and/or service work.

DO NOT USE AN EXTENSION CORD:

DO NOT ATTEMPT TO DISABLE THE GROUNDED PLUG BY USING IMPROPER ADAPTERS OR IN ANY WAY MODIFY THE CORD SET.

- Install the treadmill on a flat level surface with access to a 220-240 volt (50/60Hz), grounded outlet.
- Do not operate treadmill on deeply padded, plush or shag carpet. Damage to both carpet and treadmill may result.
- Do not block the rear of the treadmill. Provide a minimum of 1 metre clearance between the rear of the treadmill and any fixed object.
- Place your unit on a solid, level surface when in use.
- When running, make sure the plastic clip is fastened onto your clothing. It is for your safety, should you fall or move too far back on the treadmill.
- Keep hands away from all moving parts.
- Never operate the treadmill if it has a damaged power cord or plug. When damaged, these must be replaced by the manufacturer, service agent or similarly qualified persons in order to avoid a hazard.
- Keep the cord away from heated surfaces.
- Do not operate where aerosol spray products are being used or where oxygen is being administered. Sparks from the motor may ignite a highly gaseous environment.
- Never drop or insert any object into any openings.

- The treadmill is intended for in-home use only and is not suitable for commercial environments.
- To disconnect, turn all controls to the off setting, remove the safety key, and then remove the plug from the outlet.
- The pulse sensors are not medical devices. Various factors, including the user's movement, may affect the accuracy of heart rate readings. The pulse sensors are intended only as exercise aids in determining heart rate trends in general.
- Use the handrails provided; they are for your safety.
- Wear proper shoes. High heels, dress shoes, sandals or bare feet are not suitable for use on your treadmill. Quality athletic shoes are recommended to avoid leg fatigue and injury.
- Before undertaking any type of exercise program, it is recommended that you consult a doctor.
- Health related injuries may result from incorrect or excessive training.
- This appliance is not intended for use by persons (including children) with limited physical, sensory or mental capabilities, or lack of experience and knowledge, unless they have been given supervision or instruction concerning use of the appliance by a person responsible for their safety.
- **WARNING:** Heart rate monitoring systems may be inaccurate. If you feel faint stop exercising immediately.
- Children should not be allowed on or around the equipment, even when not in use.
- Children should be supervised to ensure that they do not play with this machine.
- Loose-fitting clothing or jewellery that could become an entanglement hazard should not be worn.
- Training shoes should be worn when using the equipment.
- Equipment must be used on a level and stable surface.
- All fixings should be checked before the equipment is used.
- All literature relating to the use of the equipment should be retained for future reference.
- Recommended operating temperature: 5-40°C.

(!) Remove the safety key after use to prevent unauthorized treadmill operation.

II. IMPORTANT ELECTRICAL INFORMATION

⚠ WARNING!

1) **NEVER** use a ground fault circuit interrupt (GFCI) wall outlet with this treadmill. Route the power cord away from any moving part of the treadmill including the elevation mechanism and transport wheels.

2) **NEVER** operate treadmill on Generator or UPS power supply.

3) **NEVER** remove any cover without first disconnecting AC power.

4) **NEVER** expose this treadmill to rain or moisture. This treadmill is not designed for use outdoors, near a pool, or in any other high humidity environment.

III. IMPORTANT OPERATING INSTRUCTIONS

1) Insert the power plug into the socket directly.

2) The constant running time is less than 2 hours. Be sure to read the entire manual before operating your machine.

3) Understand that changes in speed and incline do not occur immediately. Set your desired speed on the computer console and release the adjustment key. The computer will obey the command gradually.

4) Use caution while participating in other activities while walking on your treadmill; such as watching television, reading, etc. These distractions may cause you to lose balance or stray from walking in the Centre of the belt; which may result in serious injury.

5) In order to prevent losing balance and suffering unexpected injury, NEVER mount or dismount the treadmill while the belt is moving. This unit starts with a very low speed. Simply standing on the belt during slow acceleration is proper after you have learned to operate this machine.

6) Always hold on to handrail while making control changes.

7) A safety key is provided with this machine. Remove the safety key will stop the walking belt immediately; the treadmill will shut off automatically. Insert the safety key will reset the display.

8) Do not use excessive pressure on console control keys. They are precision set to function properly with little finger pressure.

9) This appliance is not intended for use by persons (including children) with reduced physical, sensory or mental capabilities, or lack of experience and knowledge, unless they have been given supervision or instruction concerning use of the appliance by a person responsible for their safety, Children should be supervised to ensure that they do not play with the appliance.

10) Please consult your doctor at first before running, if you have one of the following diseases:

a. Cardiopathy, hypertension, sugar diabetes, respiratory disease, smoking, and other chronic diseases, complication disease.

b. If you are over 35 years old and heavier than common weight.

c. Women in pregnant or in breasting period.

11) Please stop exercising immediately and consult your doctor when you feel giddy, surfeit, thorax ache or other symptoms.

12) Please drink adequate water after taking exercises on our treadmill for more than 20 minutes.

⚠ WARNING!

Now here we suggest that you should consult with your physician or health professional before starting your workout, especially for the age up to 35 old or once-health problem people. We take no responsible for any troubles or hurts if you don't following our specification. Treadmill will be carefully assembled and covered the motor shield, then connect to the power.

IV. PARTS LIST

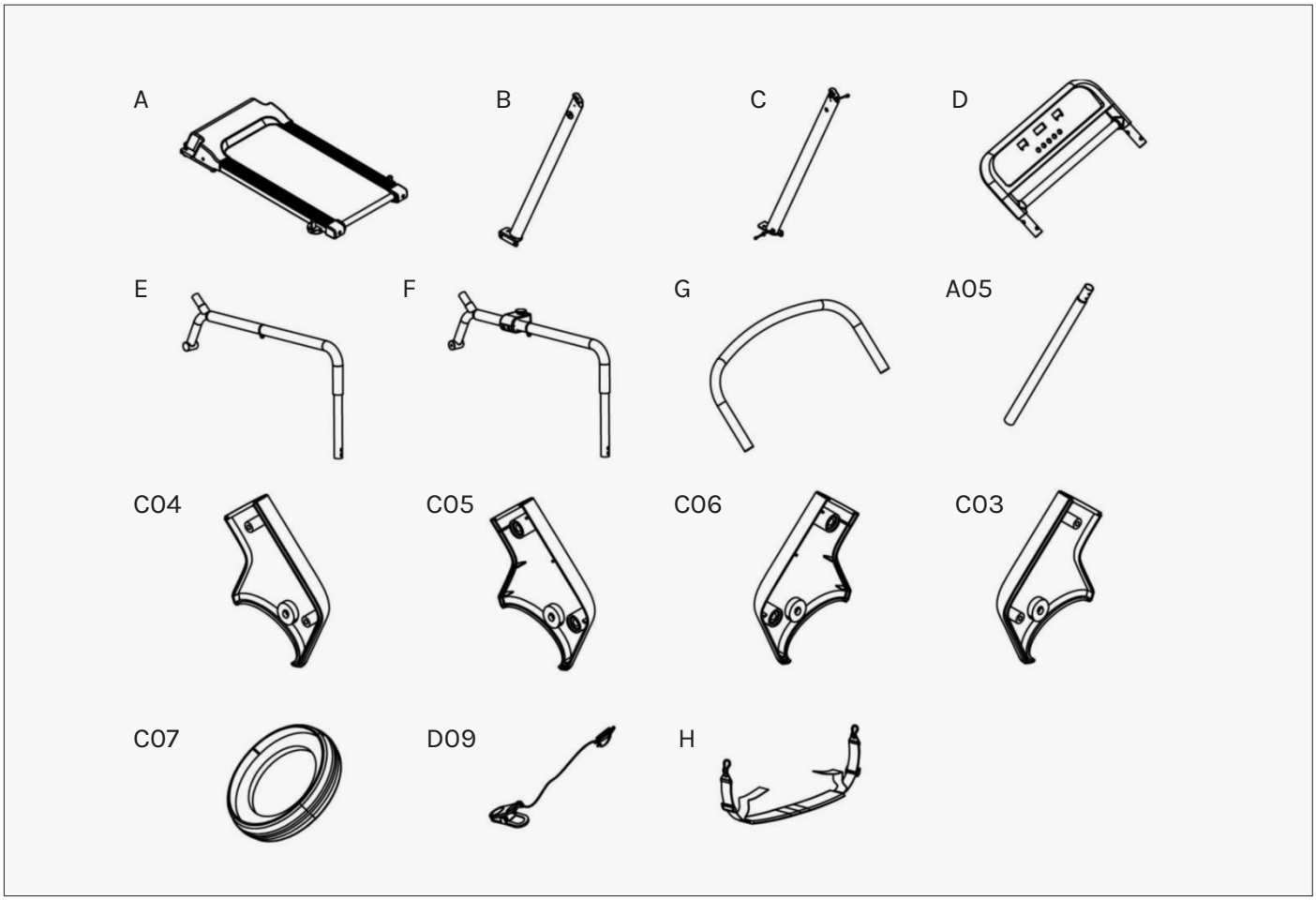

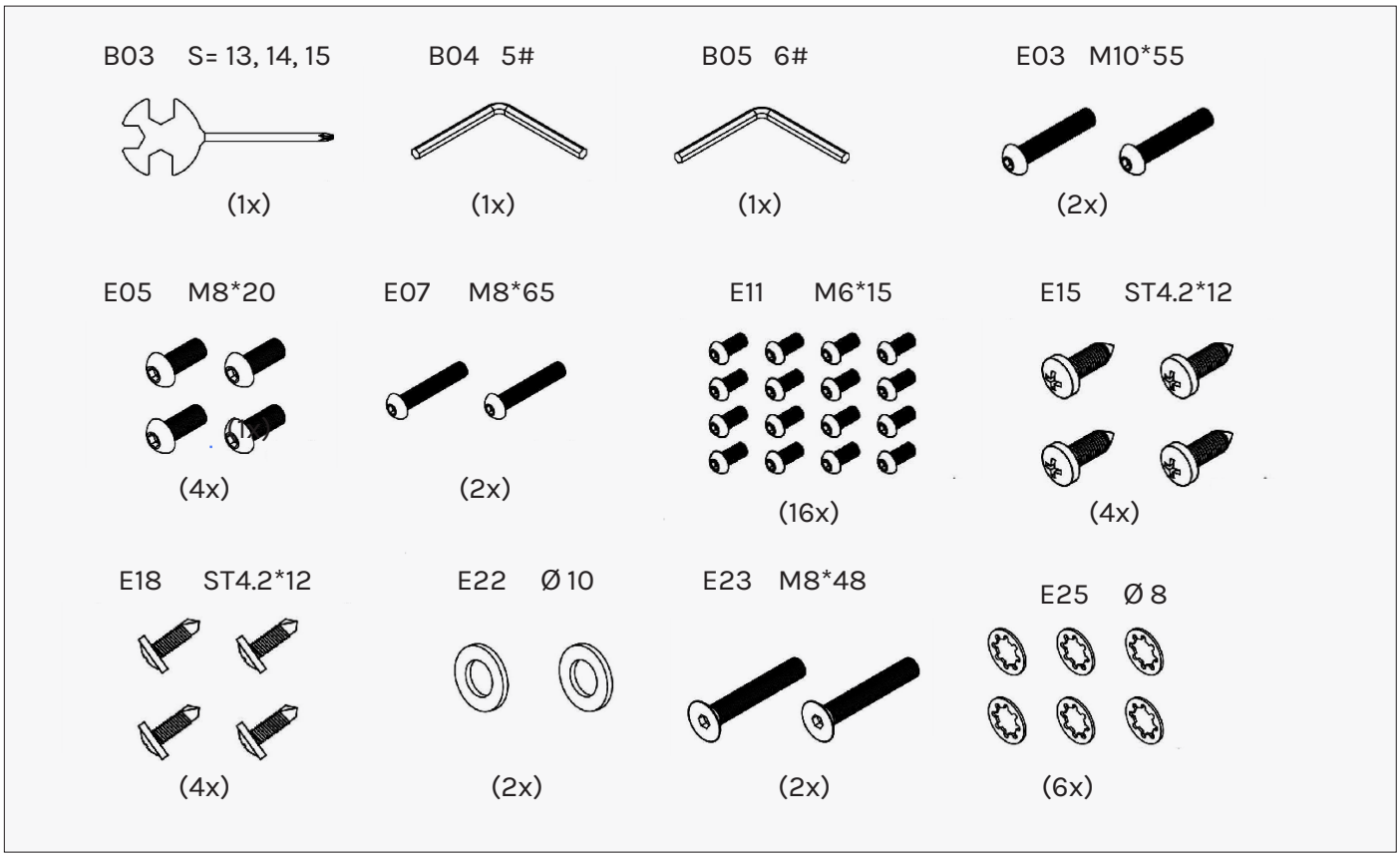

No.	Description	Qty
A	Main frame	1
B	Left upright tube	1
C	Right upright tube	1
D	Console base	1
E	Left handle bar	1
F	Right handle bar	1
G	Front handle bar	1
A05	Support tube	2

No.	Description	Qty
C04	Right upright tube cover	1
C05	Left upright tube inside cover	1
C06	Right upright tube inside cover	1
C03	Left upright tube cover	1
C07	Handle bar decoration ring	2
D09	Safety key	1
H	Protective belt set	1

⚠ WARNING!

Do not connect power before completing assembly

V. ASSEMBLY INSTRUCTIONS

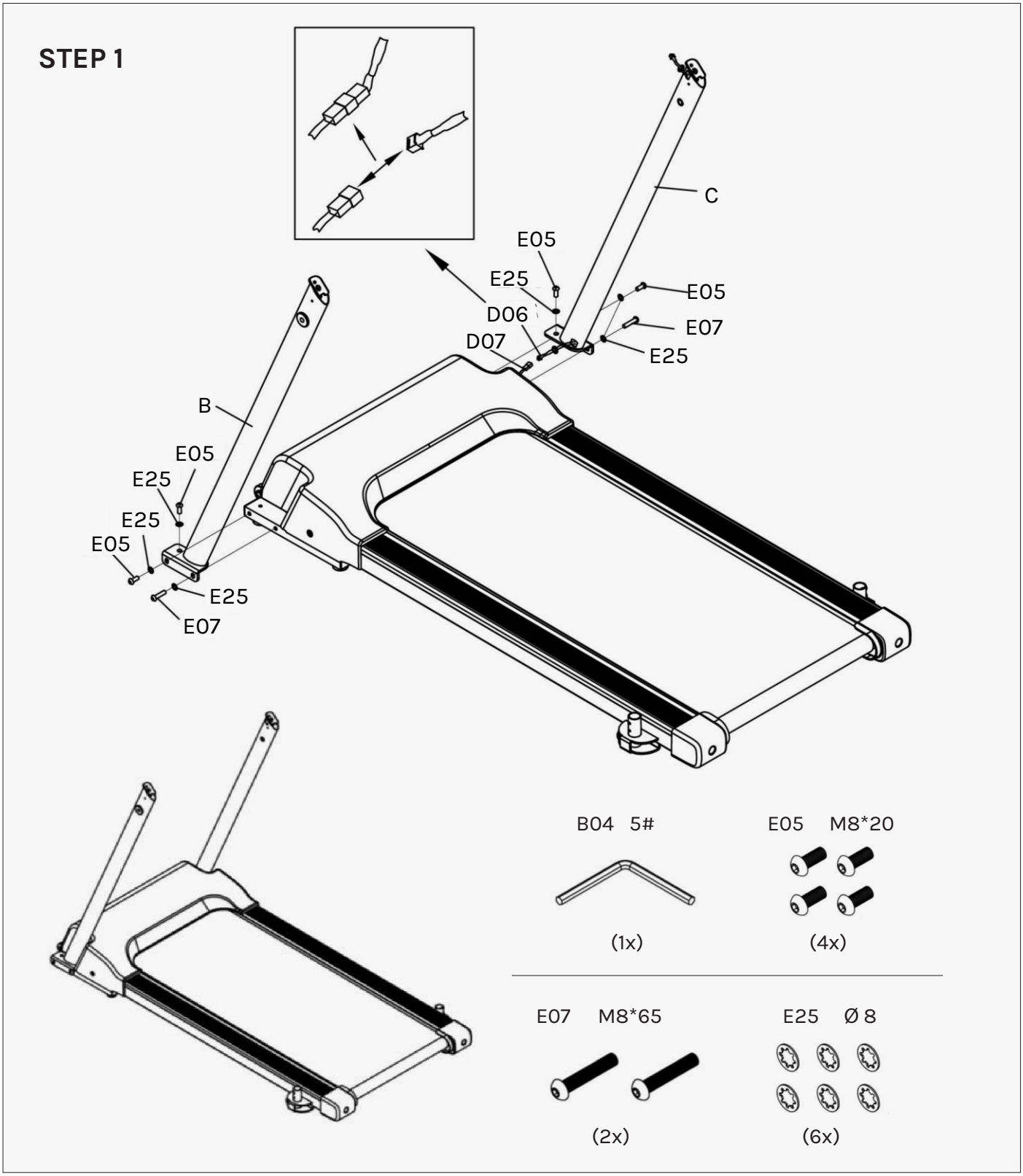

1. Plug in the cables as pictured and install part (B) and (C) onto the Main frame (A) using:
   - E05 M8x20 Bolts
   - E25 Φ8 Washers
   - E07 M8x65 Bolt

NOTE: Be careful not to squish the cables.

STEP 2

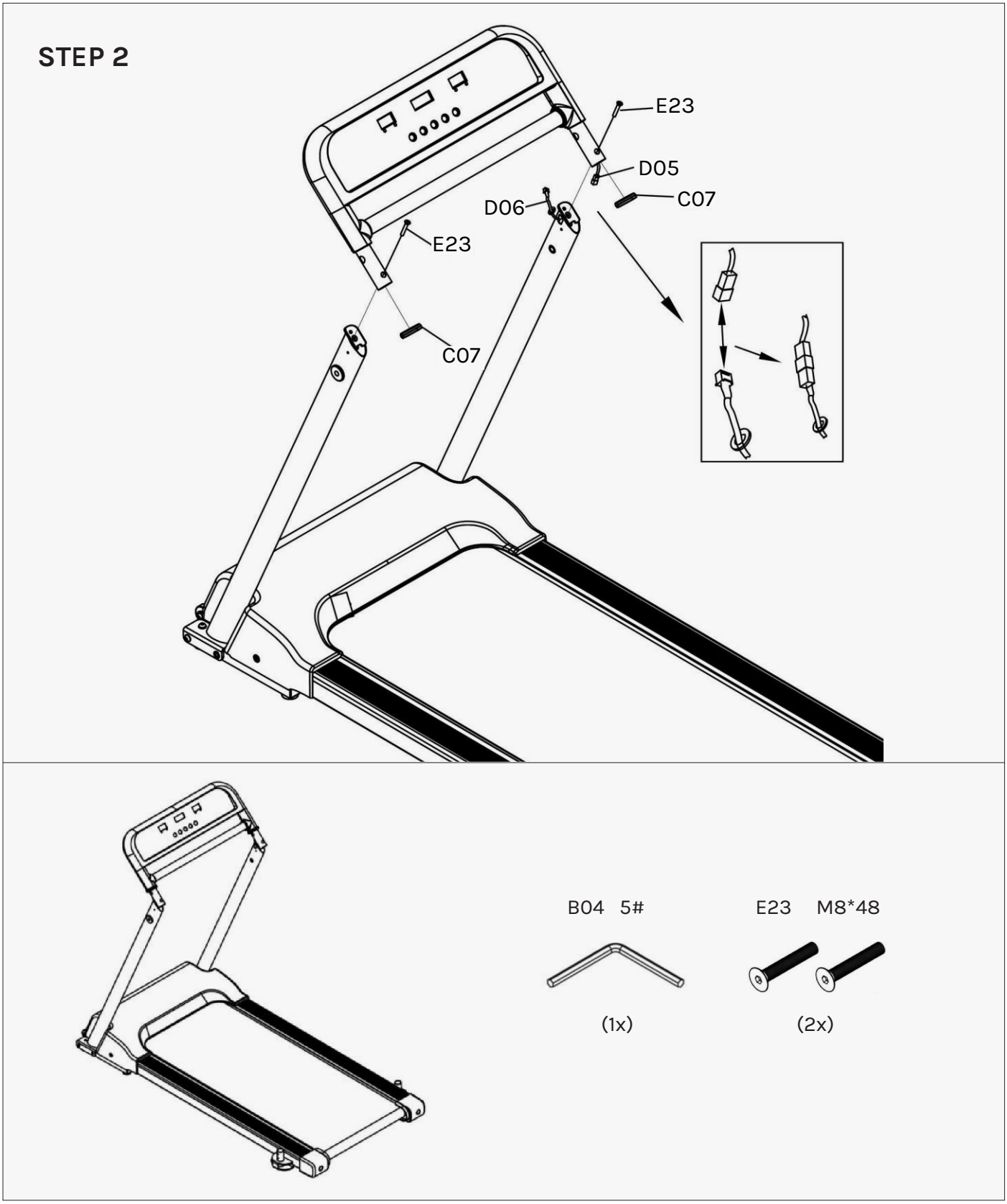

1. Place the (C03) tube cover into the display handle post like pictured.
2. Connect the cables as pictured for the right upright post to the display.
3. Ensure the cables are safely inside the tube and then fix the display onto the uprights using:
   -E23 M8x48 Bolt

STEP 3

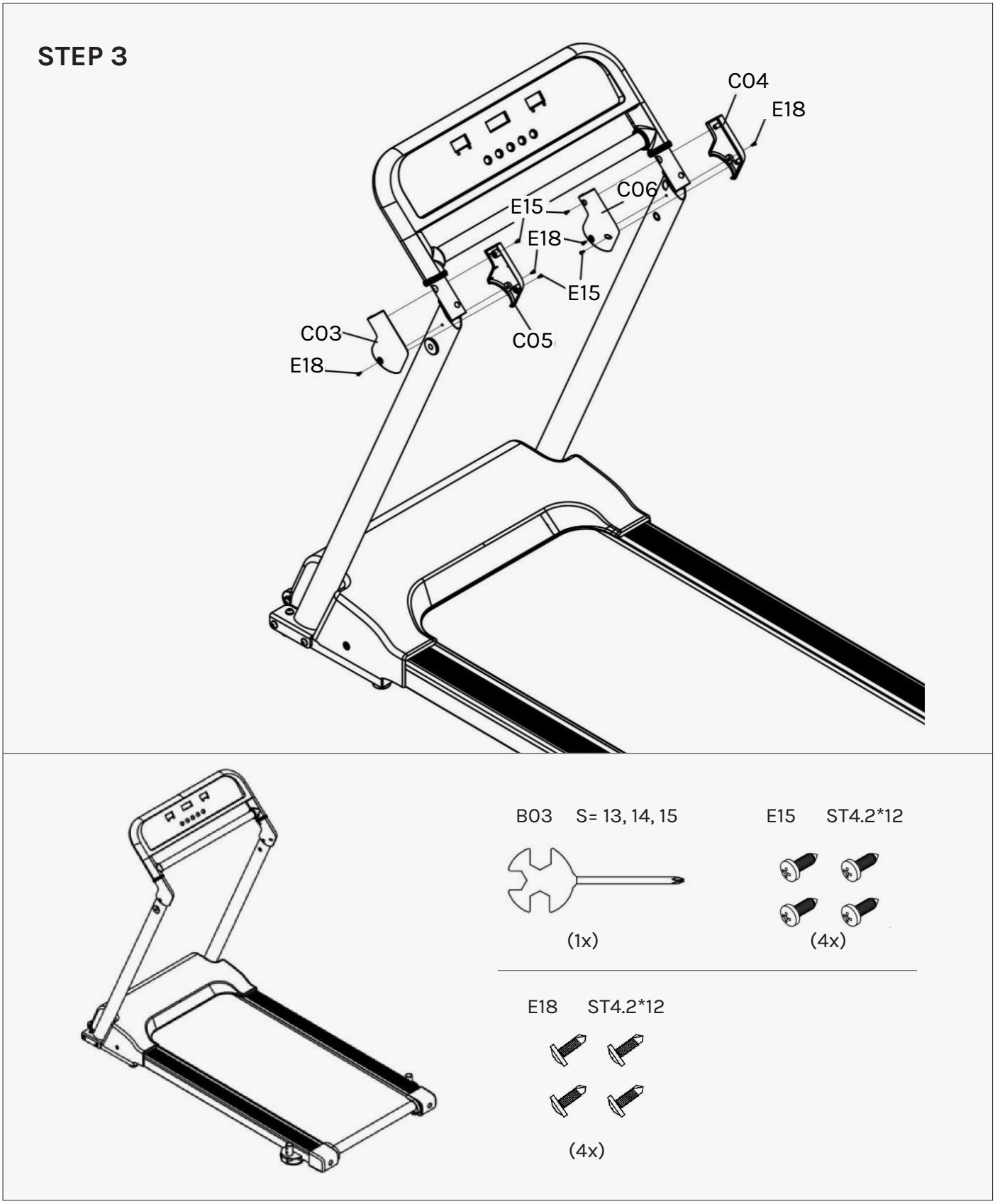

1. Install the (C03) Left upright tube cover, (C05) Left upright tube inside cover, (C06) Right upright tube inside cover and (C04) Right upright tube cover using:

- E18 ST4.2x12 Screws
- E15 ST4.2x12 Screws

STEP 4

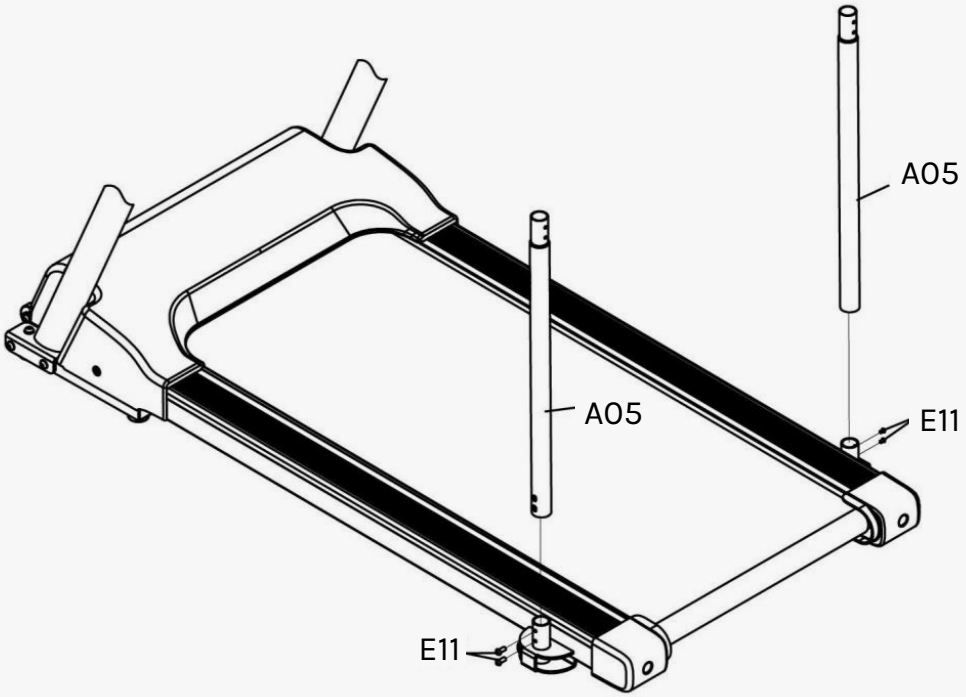

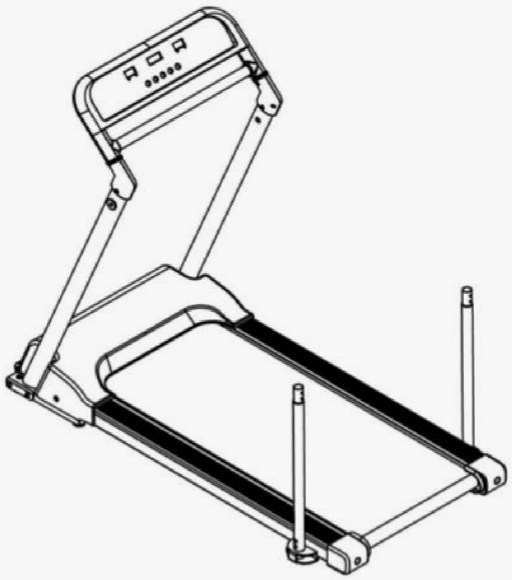

B04 5#

(1x)

E11 M6*15

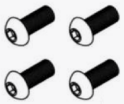

(4x)

1. Connect (A05) support tube onto the main frame using:
   - E11 M6x15 Bolts

STEP 5

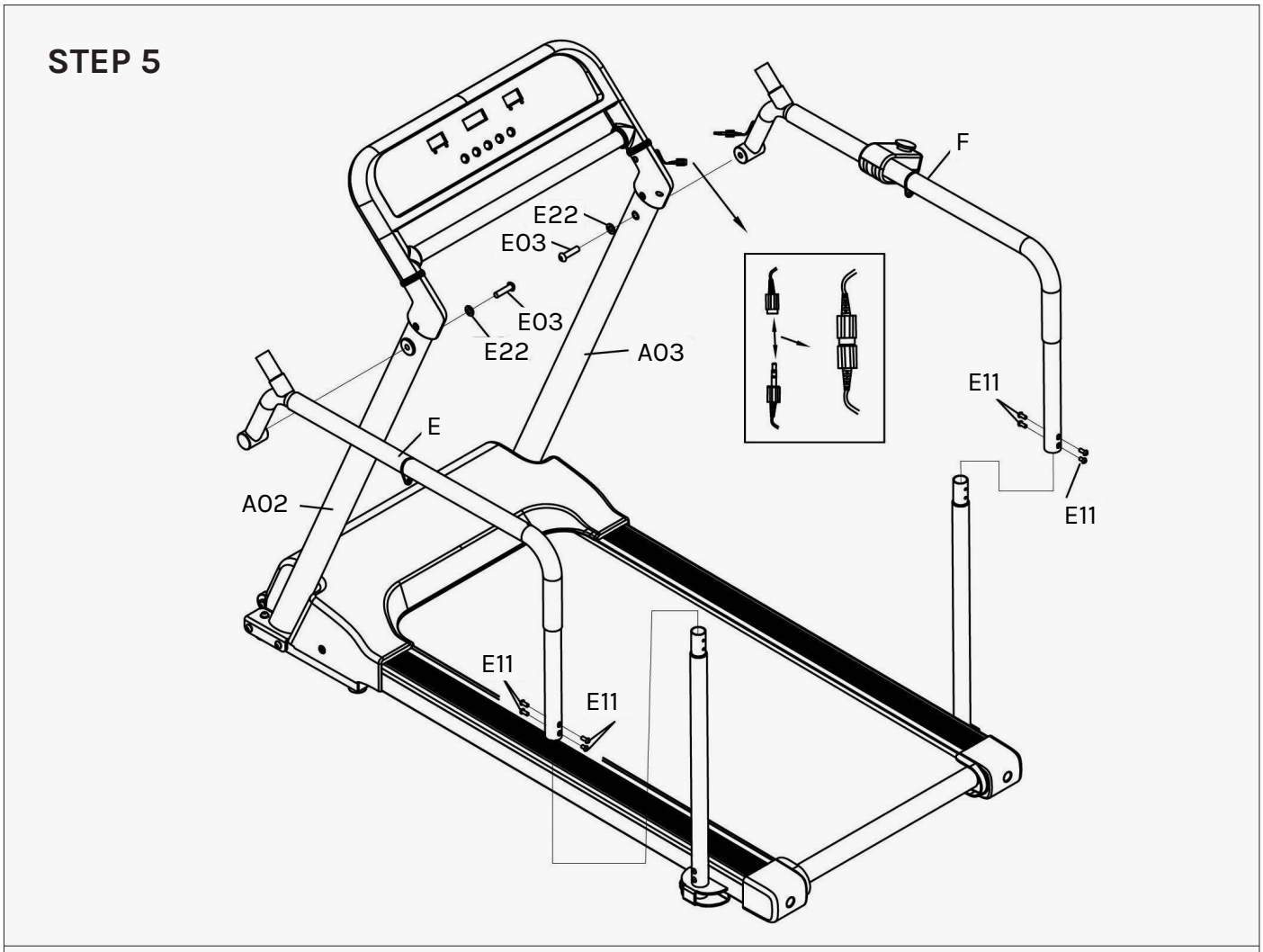

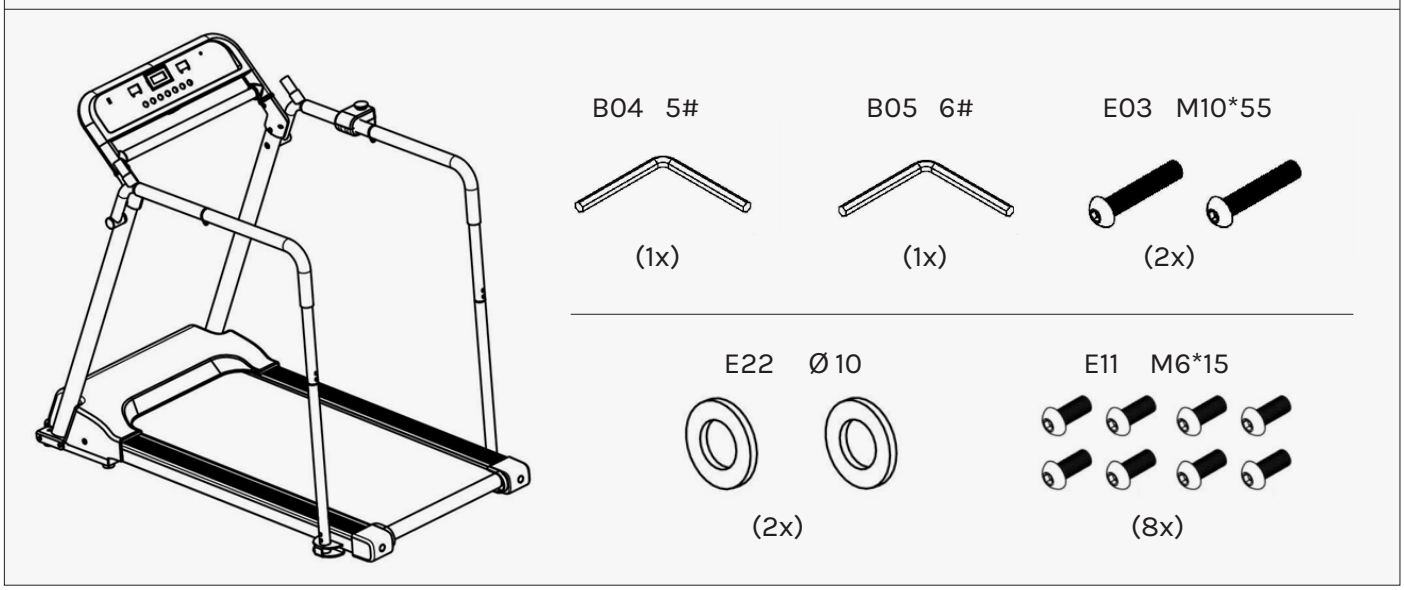

1. Install (E) left handlebar to (A02) support using:
   -E03 M10x55 Bolt - E22 Φ10 Washer
2. Connect (E) left handle bar to (A05) support tube using E11 M6x15 Bolts.
3. Connect the wires on the display to the wire on (F) right handlebar as pictured.
4. Install (F) right handlebar to (A03) support using:
   -E03 M10x55 Bolt - E22 Φ10 Washer
5. Connect (F) right handlebar to (A05) support tube using E11 M6x15 Bolts.

STEP 6

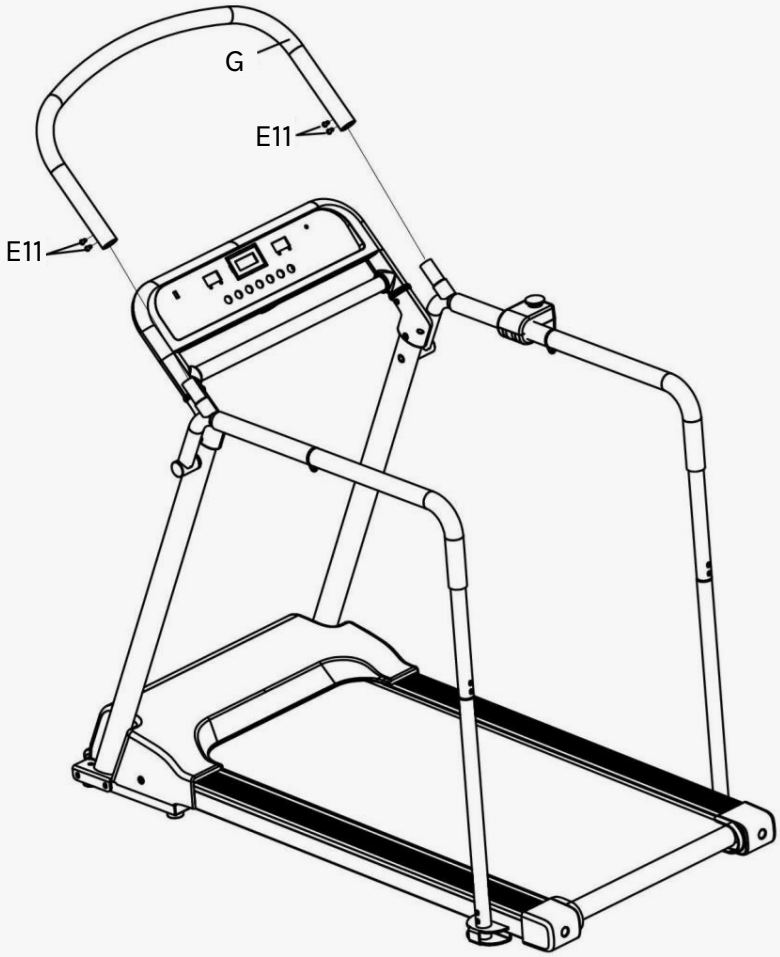

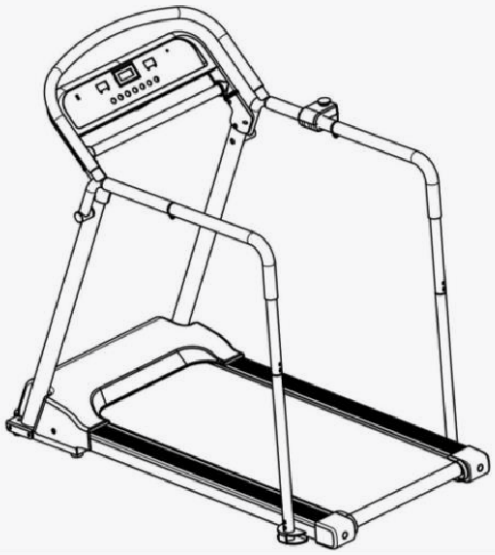

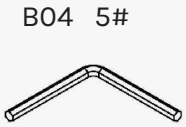

B04 5#

(1x)

E11 M6*15

(4x)

1. Install (G) front handlebar to the post on the front of the left and right handlebars as pictured using E11 M6x15 bolts.

STEP 7

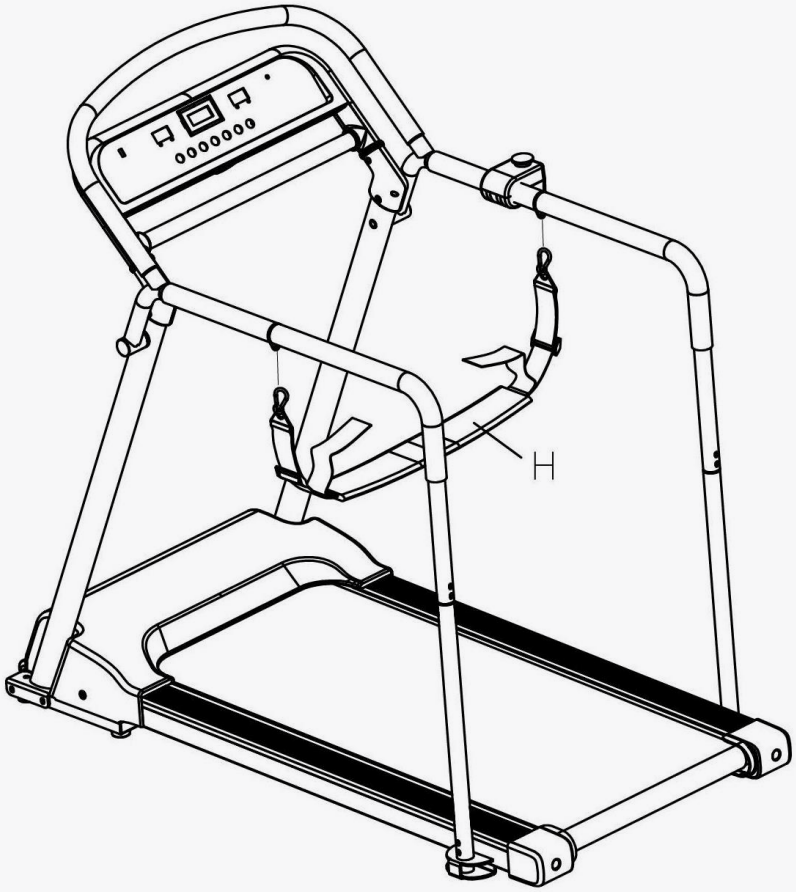

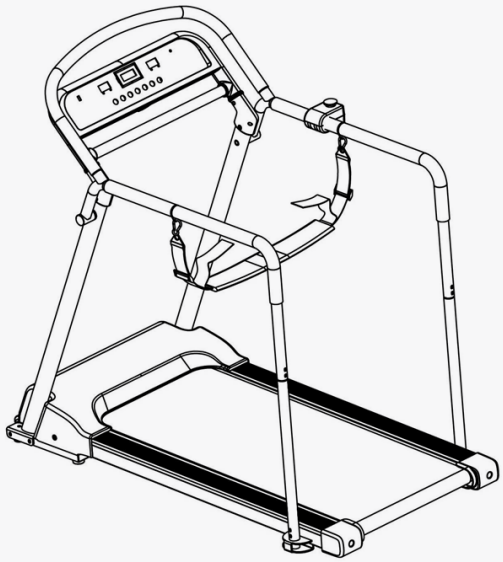

1. Optional: Attach (H) protective belt to the handlebars as pictured.

Treadmill is now assembled and can be turned on for use.

VI. FOLDING INSTRUCTIONS

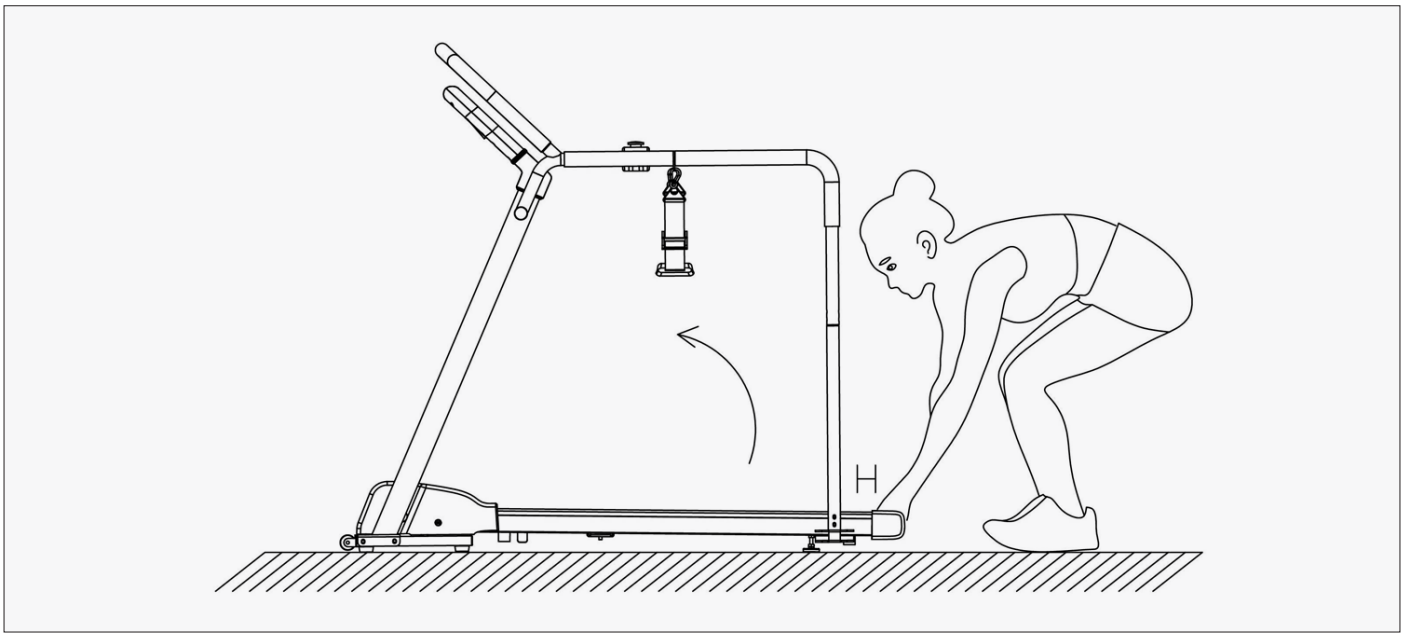

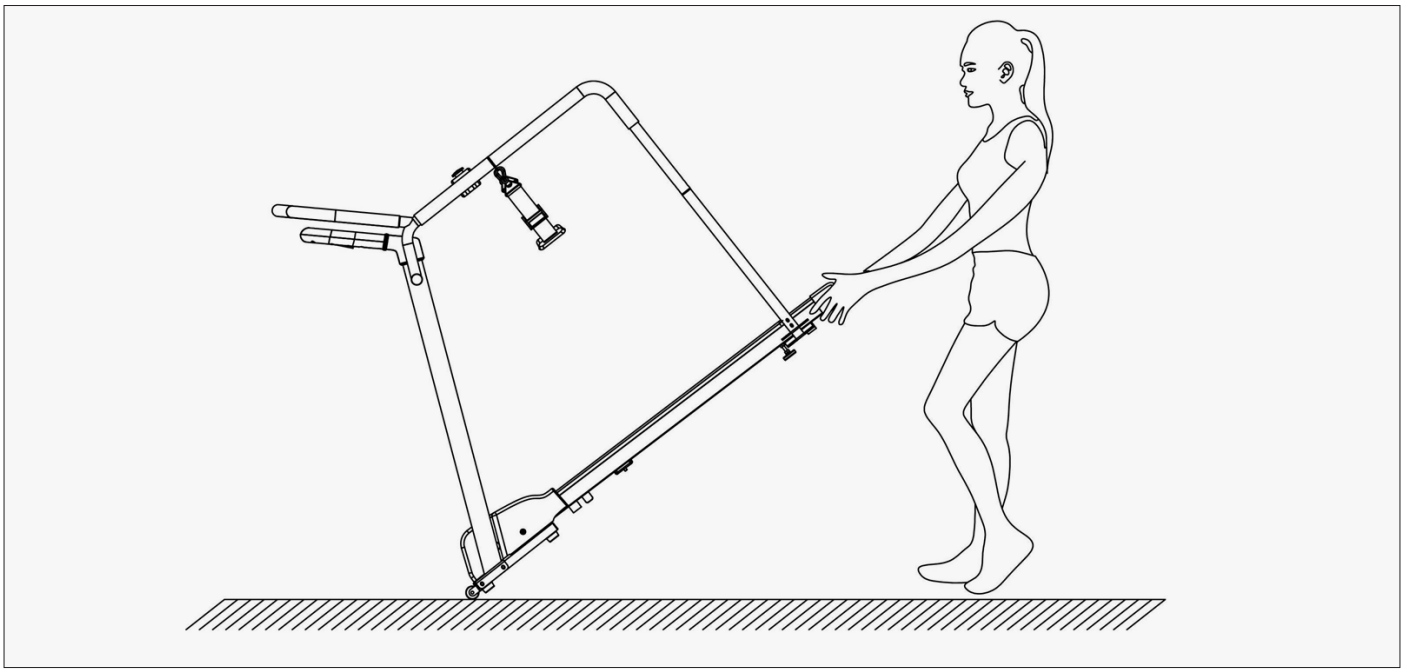

Hold from point H and lift until the treadmill is tilted onto the transportation wheels.
You can now move to your desired spot.

VII. IMPORTANT ELECTRICAL INFORMATION

⚠ WARNING!

This treadmill requires a right power source in order to properly operate. For your safety, as well as the safety of others, please verify that the power source is correct before plugging the equipment. Any incorrect power source could cause significant damage to the equipment and or user

Grounding Methods:

This product must be grounded. Grounding provides the least resistance for electrical current and will reduce the risk of electric shock. The plug must be plugged into an appropriate outlet that is properly installed and grounded in accordance with all local codes and ordinances. Ensure that the product is connected to an outlet which contains the same configuration as the plug. Do not use an adaptor for this product.

This product is for use on a nominal circuit and has a grounding plug that looks like the plug illustrated in sketch A. Make sure that the product is connected to an outlet having the same configuration as the plug. No adapter should be used with this product.

DANGER:

Improper connection of the equipment-grounding conductor can result in risk of electric shock. Check with a certified electrician if you are in doubt as to whether the product is properly grounded. Do not modify the plug provided with the product. If it will not fit the outlet, have a proper outlet installed by an electrician.

⚠ WARNING!

1. NEVER use a ground fault circuit interrupt (GFCI) wall outlet with this treadmill. Route the power cord away from any moving part of the treadmill including the elevation mechanism and transport wheels.

2. NEVER operate the treadmill using a generator or UPS power supply.

3. NEVER remove any cover without first disconnecting power.

4. NEVER expose the treadmill to rain or moisture. This treadmill is not designed for use outdoors, near pools or in any other high humidity environment.

Grounding Methods

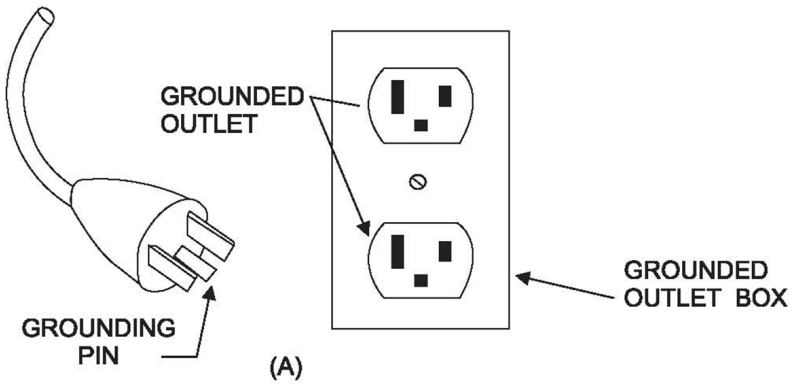

VIII. OPERATION GUIDE

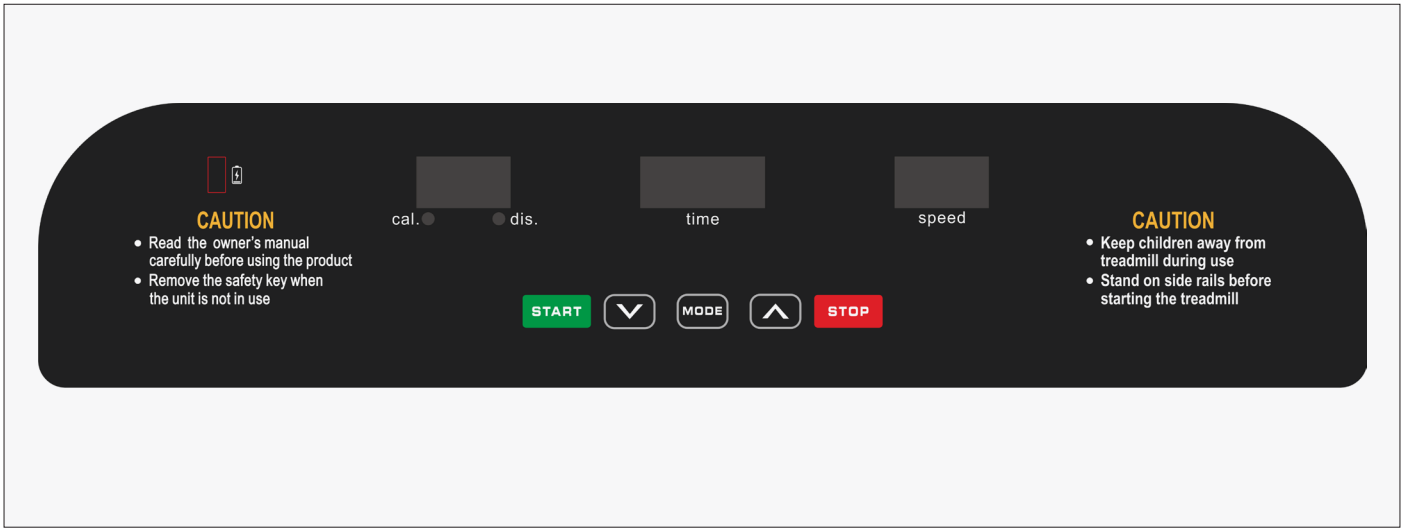

BUTTON FUNCTIONS

1. **START:** Press this button to start the machine.

2. **SPEED -:** Press this button to reduce the speed.

3. **MODE:** Press this button to choose between time, distance, calories workout targets.

5. **SPEED +:** Press this button to increase the speed.

6. **STOP//PAUSE:** Press this button to pause or stop the machine.

COMPUTER FUNCTIONS:

1. **Distance/Calories:**

1.1 Display the calories has consume.

1.2 Display the distance has run.

2. **TIME:** Display the time has run.

3. **SPEED:** Display current speed. Press SPEED+/- to adjust the speed of the machine.

4. **MODE:** Press Mode button to enter TIME, DISTANCE, CALORIES setting.

- From standby mode, press Mode button, the corresponding light of TIME, DISTANCE, CALORIES will come on, select between TIME, DISTANCE, CALORIES.
- Press SPEED+/- set the workout target value.
- Press START button, treadmill will run after 3 seconds.
- Press SPEED+/- to adjust the speed.

LUBRICATION REMIND FUNCTION

This machine has lubrication remind function. After every total running distance of 300km (188miles), your treadmill needs to be maintained with oil. The system will remind with sound for every 10 seconds, and window will show "OIL". This means that your treadmill needs to be lubricated with oil. Please read the user's manual first, and add the oil to the middle part of running board. After you finishing lubrication, please hold on "STOP" button for 3 seconds, and the system warning sound will disappear.

SAFETY LOCK FUNCTION

Under any mode, if you pull away the safety key, the machine will stop. The window will show --- with reminding sound. The machine cannot work until safety key is inserted back.

POWER SAVE FUNCTION

The machine is with energy saving function. Under standby mode, at the state of waiting for operation, if without any operation, the saving on power function will be available after 10 minutes, the display will be closed up. You can press any button to turn on the display.

POWER ON ⏻ AND POWER OFF ○

Switch off the power: You can switch off the power to stop the treadmill, which won't be damaged at any time. If you are not using the treadmill for a while, we recommend to switch off from the power switch to prolong life of the control board.

CAUTION:

1. We recommend that you maintain a slow speed at the beginning of a session and hold on to the handrails until you become comfortable and familiar with the treadmill.

2. Attach the magnet end of the safety pulling rope to the computer and also attach the clip of the safety pulling rope to your clothing.

3. To end your workout safely, press the STOP button or pull out the safety pulling rope, then the treadmill will stop immediately.

IX. MAINTENANCE & CARE

General cleaning will help prolong the life and performance of your treadmill. Keep the unit clean and maintained by dusting the components on a regular basis. Clean both sides of the running belt to prevent dust from accumulating underneath the belt. Keep your running shoes clean so that dirt from your shoes does not wear out the running board and belt. Clean the surface of the running belt with a clean damp cloth.

- To better maintain the treadmill and prolong its life it is suggested that the machine be powered off for 10 minutes every 2 hours and fully powered off whenever not in use.
- A loose Running Belt will result in the runner sliding off when running, while too tight of a Running Belt will result in decrease to the motors performance and also create more friction between the roller and running belts. The most suitable tightness for the belts is pulled out 50-75mm from the Running Board.

CENTERING THE RUNNING BELT:

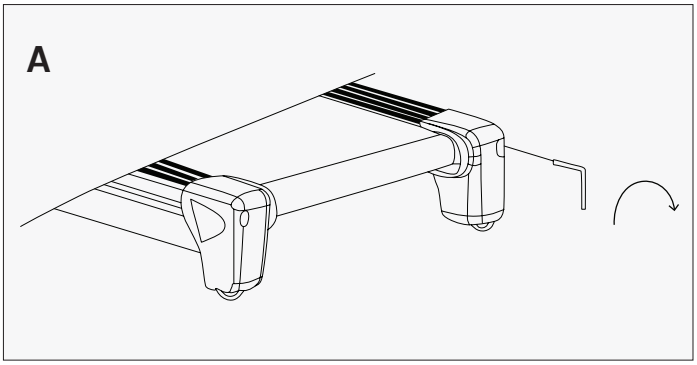

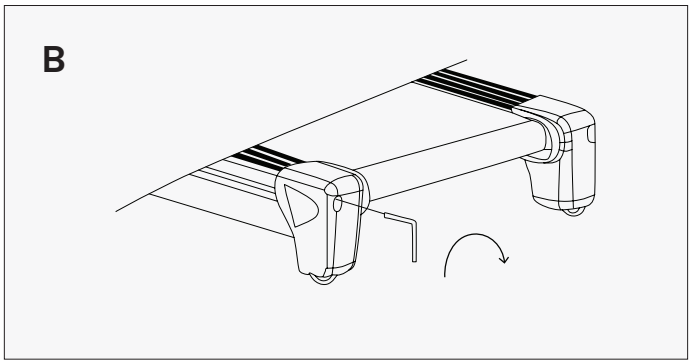

1. If the Running Belt moves to the right, turn the adjusting bolt on the right side ¼ turn clockwise, then turn the left adjustment bolt ¼ turn counter-clockwise. If the belt does not move, repeat this step until it centers. Refer to figure A.

2. If the Running Belt moves to the left, turn the adjusting bolts on the left side ¼ of a turn clockwise, then turn the right adjustment bolt ¼ turn counter-clockwise. If the belt does not move, repeat this step until it centers. Refer to figure B.

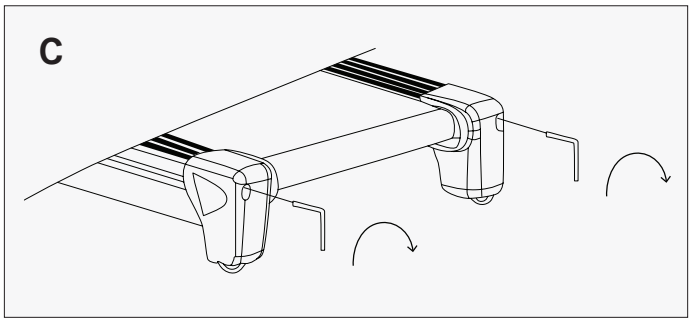

3. Over time the Running Belt will loosen. To tighten the belt, turn the Left & Right-side adjustment bolts one full turn clockwise, check the tension of the belt. Continue this process until belt is at the correct tension. Make sure to adjust both sides equally to ensure correct belt alignment. Refer to figure C.

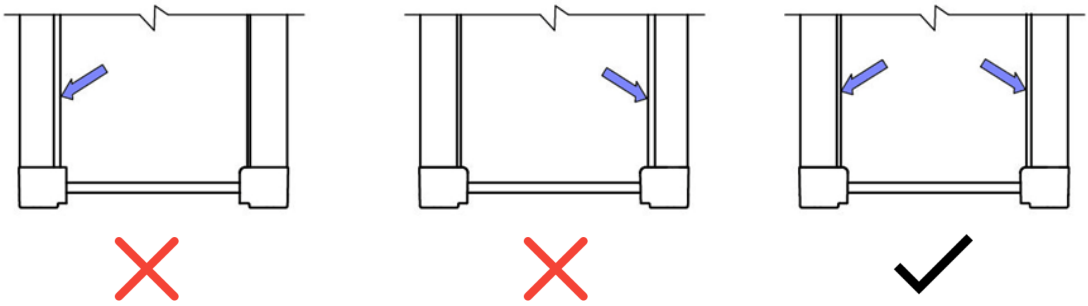

LUBRICATING THE TREADMILL

IMPORTANT NOTE:

You will need to lubricate your treadmill before the first use.

RUNNING BELTS & TREADMILL LUBRICANT:

Lubricating the running board and running belt is essential as the friction between the two affects the life span and function of the treadmill, therefore it is suggested that the running board and belt be inspected regularly.

⚠ WARNING!

Always unplug the treadmill from the electrical outlet before cleaning, lubricating or repairing the unit.

HOW TO LUBRICATE:

1. Raise the belt up on one side and apply lubricant to the running deck. Use a rag to thoroughly wipe the lubricant over the running deck. Repeat this process for the other side.

2. The moving parts should turn freely and quietly. Abnormality of moving parts will affect the safety of the equipment. Inspect and tighten bolts regularly.

3. To better maintain the treadmill and prolong its lifespan, it is suggested that maintenance be done on a regular basis.

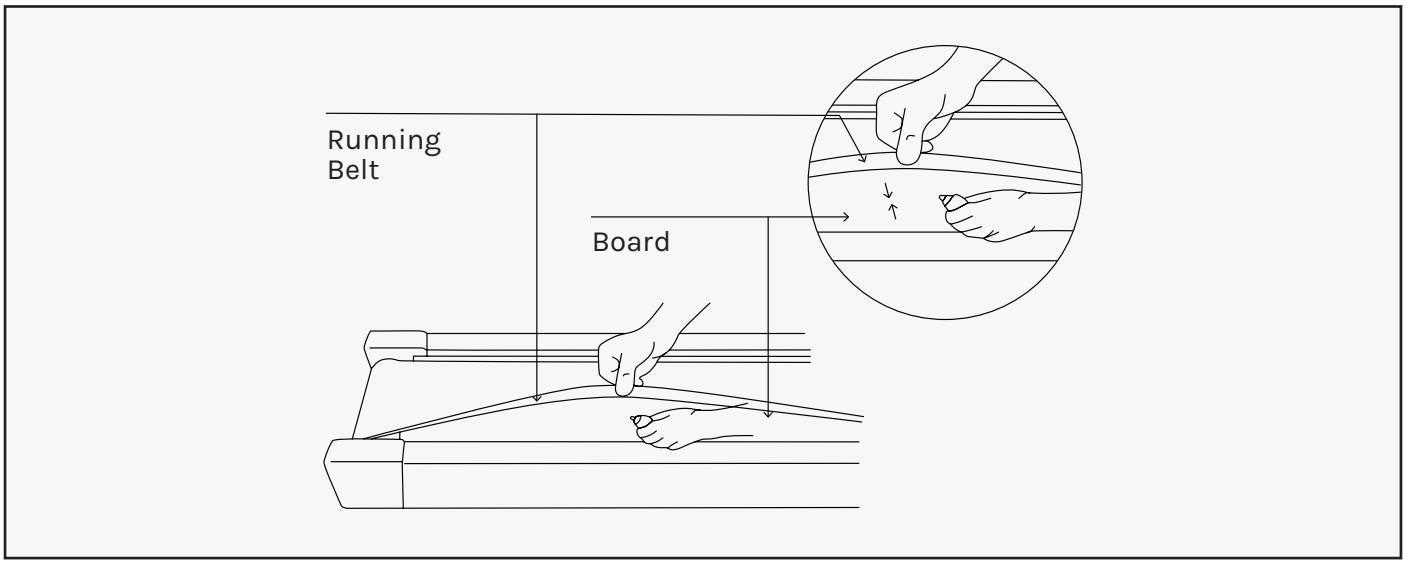

The following time table is recommended:

Light user (less than 3 hours/ week)	every six months
Medium user (3-5 hours/ week)	every three months
Heavy user (more than 5 hours/ week)	every two months

X. EXPLODED DIAGRAM

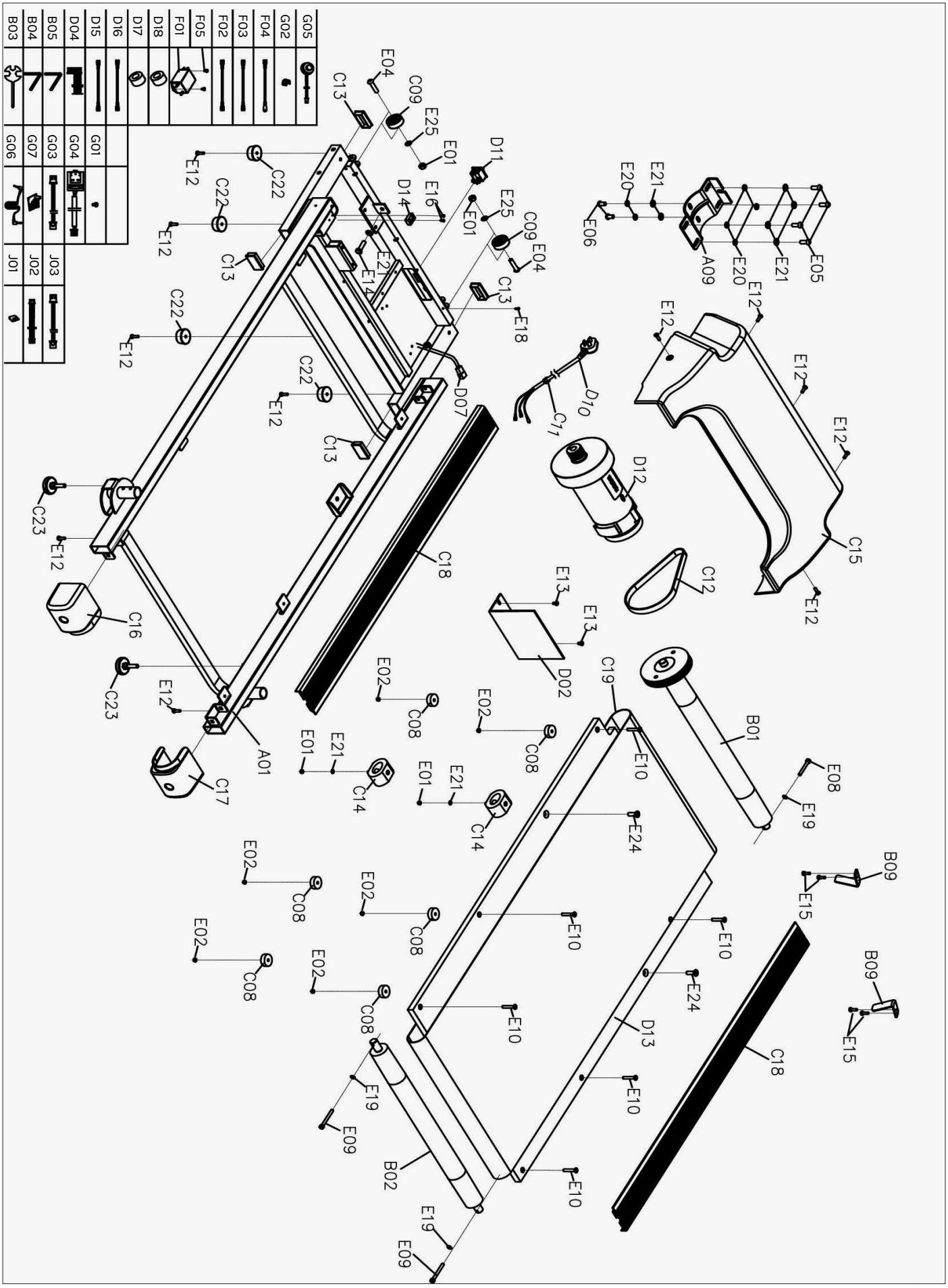

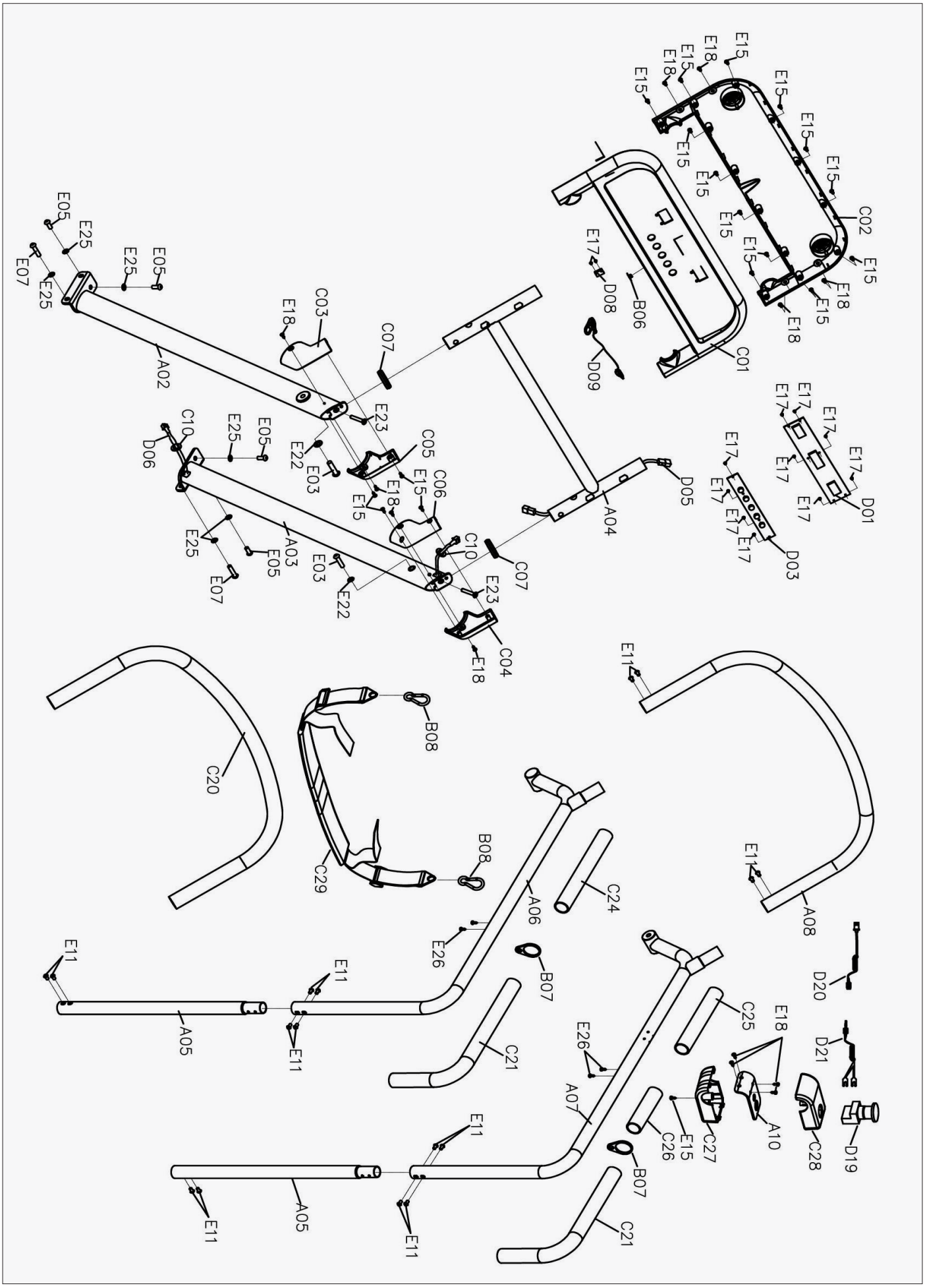
E15
E18
E15
E18
E15
E18
E15
E15
E15
E15
E15
E15
E15
E15
C02
E15
E18
E15
E18
C01
B06
E17
D08
D09
E17
E17
E17
E17
E17
E17
E17
E17
E17
E17
D01
D03
D05
A04
C07
C10
E23
C04
E18
E03
E22
A03
E05
E07
E25
E05
E25
E05
E25
E07
E25
A02
C03
E18
C07
E23
C05
E15
C06
E18
E15
E22
E03
C10
D06
E25
E05
E11
A08
E11
D20
D21
D19
C28
A10
E18
C27
E15
C26
C25
B07
C21
E26
A07
E11
A05
E11
E11
E11
E11
A05
E11
C24
A06
B07
C21
E26
B08
C29
B08
C20

XI. PARTS LIST

No.	Part description	Remark	Qty
A01	Main frame		1
A02	Left upright tube		1
A03	Right upright tube		1
A04	Console bracket		1
A05	Support tube		2
A06	Left handle bar		1
A07	Right handle bar		1
A08	Front handle bar		1
A09	Motor bracket		1
A10	Emergency Stop fixed board		1
B01	Front roller		1
B02	Back roller		1
B03	Cross wrench with screw driver		1
B04	5# Allen wrench		1
B05	6# Allen wrench		1
B06	Safety key steel plate		1
B07	Protective belt hook		2
B08	Safety band hook		2
B09	Hook		2
C01	Console top cover		1
C02	Console bottom cover		1
C03	Left upright tube cover		1
C04	Right upright tube cover		1
C05	Left upright tube inside cover		1
C06	Right upright tube inside cover		1
C07	Handle bar decoration ring		2
C08	Blue cushion		6
C09	Transport wheel		2
C10	Ring-shape wire plug		2
C11	Power wire buckle		1
C12	Motor belt		1
C13	Square pipe		4
C14	Cushion		2
C15	Motor cover		1
C16	Left backend cover		1
C17	Right backend cover		1
C18	Side rail		2
C19	Running belt		1
C20	Foam	1265MM	1
C21	Foam1	570MM	2
C22	Flat foot pad		4

No.	Part description	Remark	Qty
D01	Console		1
D02	Control board		1
D03	Button board		1
D04	Button board connecting wire		1
D05	Top signal wire		1
D06	Middle signal wire		1
D07	Bottom signal wire		1
D08	Speed sensor		1
D09	Safety key		1
D10	Power wire		1
D11	On-off switch		1
D12	DC motor		1
D13	Running board		1
D14	Speed sensor		1
D15	AC single wire	350MM Blue	1
D16	AC single wire	350MM Brown	1
D17	Magnet ring		1
D18	Magnet core		1
D19	Emergency Stop Button		1
D20	Emergency Stop Button top single wire		1
D21	Emergency Stop Button bottom single wire		1
E01	Nut	M8	4
E02	Nut	M6	6
E03	Bolt	M10*55	2
E04	Bolt	M8*35	2
E05	Bolt	M8*20	8
E06	Bolt	M8*15	2
E07	Bolt	M8*65	2
E08	Bolt	M6*45	1
E09	Bolt	M6*55	2
E10	Bolt	M6*35	6
E11	Bolt	M6*15	16
E12	Bolt	M5*16	11
E13	Bolt	M5*8	2
E14	Bolt	M8*30	1
E15	Screw	ST4.2*12	22
E16	Screw	ST2.9*8	2
E17	Screw	ST2.9*6.0	12
E18	Screw	ST4.2*12	13
E19	Washer	6	3
E20	Spring washer	8	6

No.	Part description	Remark	Qty
C23	Adjustable foot pad		2
C24	Foam 3	285MM	1
C25	Foam	165MM	1
C26	Foam 2	77MM	1
C27	Emergency Stop Button top cover		1
C28	Emergency Stop Button bottom cover		1
C29	Protective belt		1

No.	Part description	Remark	Qty
E21	Flat washer	8	9
E23	Bolt	M8*48	2
E24	Bolt	M8*25	2
E25	Washer	8	8
E26	Screw	ST4.2*12	4

OPTIONAL PARTS LIST

No.	Part description	Remark	Qty
F01	Filter		1
F02	AC single wire		1
F03	AC single wire		1
F04	Grounding wire		1
F05	Bolt	M5*8	2
J01	USB module		1
J02	Audio input wire		1
J03	USB wire		1

No.	Part description	Remark	Qty
G01	Screw	ST2.9*6.0	12
G02	Audio module fixed cap		2
G03	Amplifier wire		1
G04	Audio jack wire		1
G05	Speaker		2
G06	Mp3 wire		1
G07	Amplifier board		1

X1I. EXERCISE GUIDE

PLEASE NOTE:

Before beginning any exercise program, consult your physician. This is important for individuals over the age of 45 or with pre-existing health problems.

The pulse sensors are not medical devices. Various factors, including the user's movement, may affect the accuracy of heart rate readings. The pulse sensors are intended only as an exercise aid in determining heart rate trends in general.

Exercising is a great way to control your weight, improve your fitness and reduce the effect of aging and stress. The key to a healthy lifestyle is to make exercise a regular and enjoyable part of your everyday life.

The condition of your heart and lungs and how efficient they are in delivering oxygen via your blood to your muscles is an important factor to your fitness. Your muscles use this oxygen to provide enough energy for daily activity. This is called aerobic activity. When you are fit, your heart will not have to work so hard. It will pump a lot fewer times per minute, reducing strain on your heart.

So as you can see, the fitter you are, the healthier and greater you will feel.

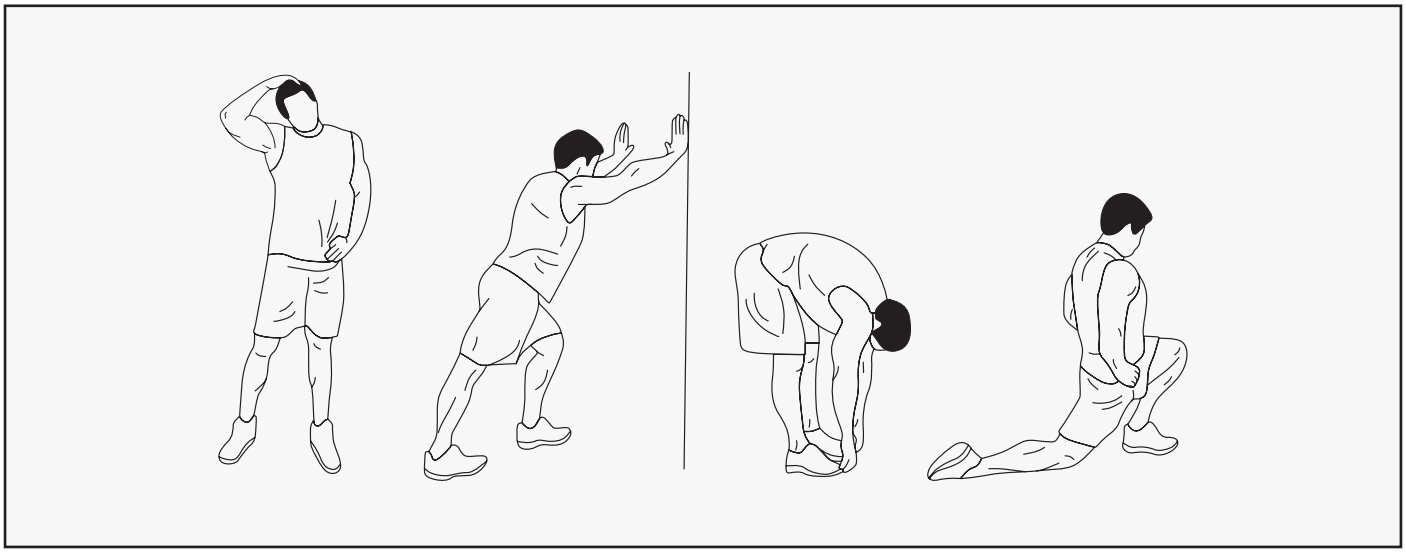

WARM UP

Start each workout with 5 to 10 minutes of stretching and some light exercises. A proper warm-up increases your body temperature, heart rate and circulation in preparation for exercise. Ease into your exercise.

After warming up, increase the intensity to your desired exercise program. Be sure to maintain your intensity for maximum performance. Breathe regularly and deeply as you exercise.

COOL DOWN

Finish each workout with a light jog or walk for at least 1 minute. Then complete 5 to 10 minutes of stretching to cool down. This will increase the flexibility of your muscles and will help prevent post-exercise problems.

WORKOUT GUIDELINES

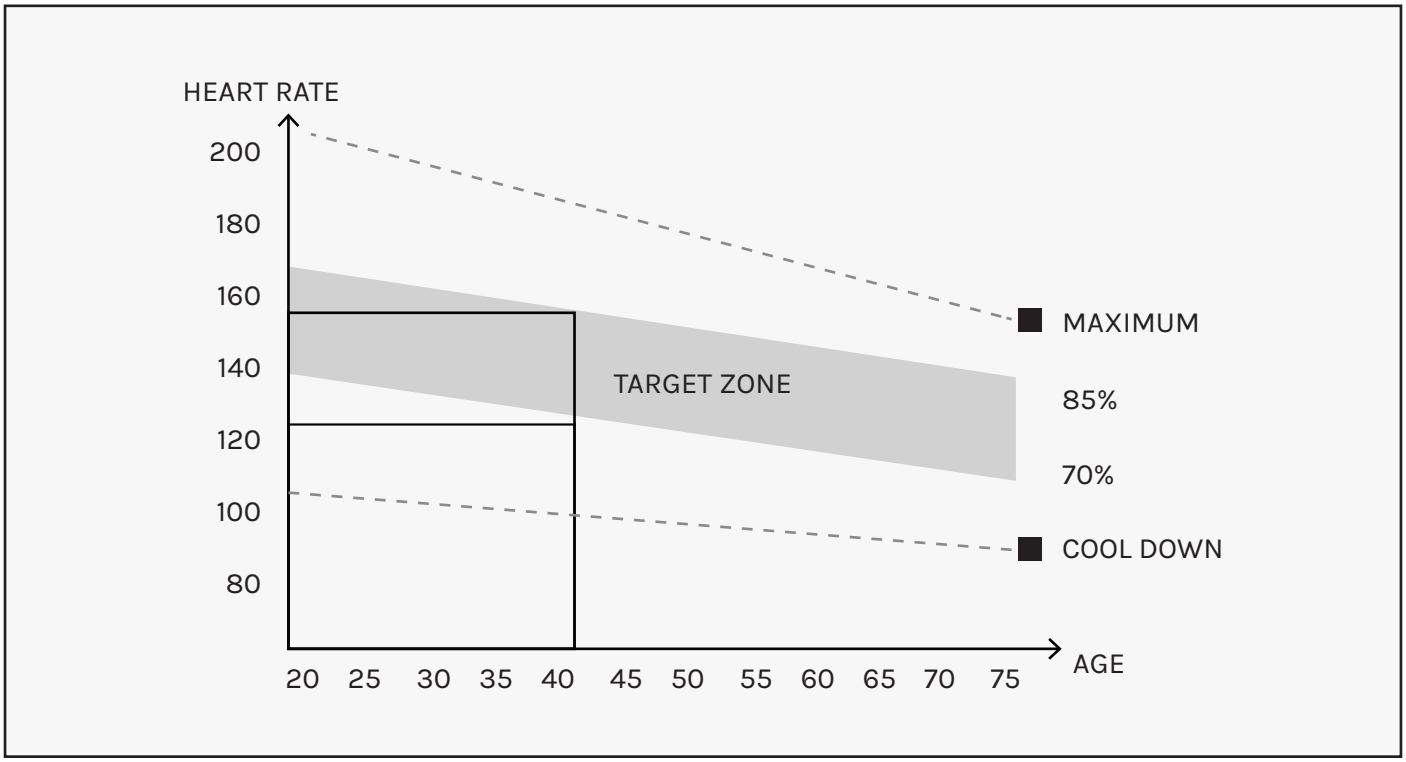

This is how your pulse should behave during general fitness exercise. Remember to warm up and cool down for a few minutes.

The most important factor here is the amount of effort you put in. The harder and longer you work, the more calories you will burn.

XIII. TROUBLESHOOTING

PROBLEM	POSSIBLE CAUSE	SUGGESTED ACTION
Treadmill will not start	Not plugged in	Plug cord into outlet
	Safety Key not inserted	Insert Safety Key
Running belt not centered	Running belt tension not correct on the left or right sides of the running board	Tighten the adjustment bolts on the left and right side of the rear roller
Computer not working	Wires from the computer and bottom control board not properly connected.	Check wire connections from the computer to the control board.
	Transformer is damaged	If the transformer is damaged, contact customer service.
E01 or E13: Message failure	Wires from the computer and bottom control board not properly connected.	Check wire connections from the computer to the control board. If the wire has been punctured or damaged, you will need to replace it. If the problem is not rectified, you may need to replace the control board.
E02: Burst clash protection	Incoming voltage is lower than 50% of the required voltage.	Check that the incoming power supply is the correct voltage. Check the control board, replace if damaged. Check motor, replace if damaged.

E05: Current overload protection (Self Protecting System)	The incoming voltage is too low or too high. The control board is damaged.	Restart the treadmill. Check the incoming voltage to ensure it is correct.
	A moving part of the treadmill is stuck and therefore the motor is unable to rotate properly.	Inspect moving parts of the treadmill to ensure that they are operating correctly. Check the motor, listen for strange noise and check for a burning smell. Replace the motor if necessary. Check the control board, replace if damaged. Lubricate the treadmill.
E06: Motor Abnormality	The motor wire is not connected or the motor is damaged.	Check motor wires to see if the motor is connected. If the wire has been punctured or damaged, you will need to replace it. If the problem is not rectified, you may need to replace the motor
E08: Control Board Abnormality	The control board is not connected.	Check the upper and middle wires to see if the control board is connected. If the wire has been punctured or damaged, you will need to replace it. If the problem is not rectified, you may need to replace the control board.
E10: Motor Abnormality	The motor is damaged or a moving part of the treadmill is stuck and therefore the motor is unable to rotate properly.	The torque is too big, please adjust the torque to be smaller. Inspect moving parts of the treadmill to ensure that they are operating correctly. Replace the motor if necessary. Lubricate the treadmill.

XIV. WARRANTY

AUSTRALIAN CONSUMER LAW

Many of our products come with a guarantee or warranty from the manufacturer. In addition, they come with guarantees that cannot be excluded under the Australian Consumer Law. You are entitled to a replacement or refund for a major failure and compensation for any other reasonably foreseeable loss or damage.

You are entitled to have the goods repaired or replaced if the goods fail to be of acceptable quality and the failure does not amount to a major failure. Full details of your consumer rights may be found at **www.consumerlaw.gov.au**.

Please visit our website to view our full warranty terms and conditions:
http://www.lifespanfitness.com.au/warranty-repairs

WARRANTY AND SUPPORT

Any claim against this warranty must be made through your original place of purchase.
Proof of purchase is required before a warranty claim may be processed.

If you have purchased this product from the Official Lifespan Fitness website, please visit
https://lifespanfitness.com.au/warranty-form

For support outside of warranty, if you wish to purchase replacement parts or request a repair or service, please visit h**ttps://lifespanfitness.com.au/warranty-form** and fill in our Repair/Service Request Form or Parts Purchase Form.

Scan this QR code with your device to go to **lifespanfitness.com.au/warranty-form**

XV. HAND PULSE TECHNOLOGY

This product comes equipped with hand pulse sensors which are used to pick up tiny EKG/ECG signals that run through the body when your heart beats. These electrical EKG/ECG signals are very small and that they must be amplified 1000 times to make the signal useful for the computer to display your pulse.

To ensure proper operation:

- The user must maintain good, consistent contact on all four sensors.
- The users skin cannot be too dry or too wet.

Other factors that could affect the reading:

- Change of grip on the sensors (during slow pace walking and up to running).
- Tightening of hand muscles will produce small electrical signal.
- Static electricity charges from the air or from walking on the treadmill.

EKG/ECG Sensors may filter through actual EKG/ECG signals and "Noise" factors that may affect the reading. This will cause the pulse reading to be delayed and will take longer to update the display as the heart rate changes. Too much noise will create an incorrect reading. Medical conditions or having no electrical signal in the hands are other factors that may affect pulse readings as well.

These are limitations of hand pulse technology and even the most expensive systems (which can cost upwards of $3,000) used in hospitals have the same problems. The difference is that a patient in a hospital is not running on a treadmill. Hand pulse technology works well on stationary exercise machines like bikes and even elliptical cross trainers but are not perfect on a treadmill. We offer treadmills with a wireless heart rate receiver which may be a more accurate option.

To test if your hand pulse sensors are working up to specification, hold them while standing on the sidestep rails, not walking, and see if the reading is more in line with what you would expect. This will eliminate the movement and static electricity factors. If your hands are dry, then wet them slightly (saliva works as a great conductor if this doesn’t bother you).

LIFESPAN FITNESS

WWW.LIFESPANFITNESS.COM.AU