Tempest Commercial Treadmill

USER MANUAL

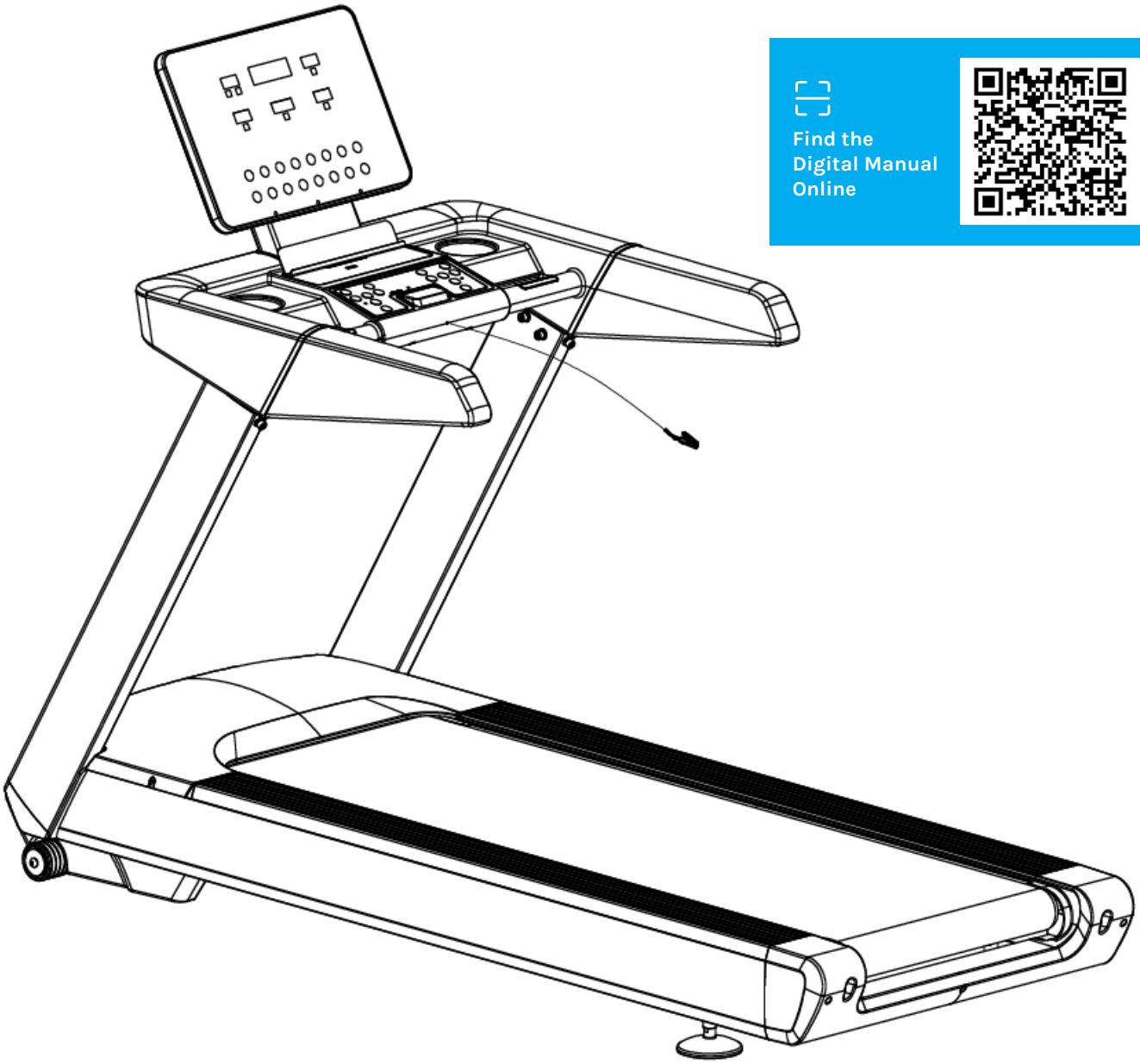

Find the Digital Manual Online

Read all instructions carefully before using this product.
Retain this owner's manual for future reference.

IMPORTANT

All nuts and bolts are to be checked and tightened on a regular basis. This includes pedals and other moving parts. Failure to do so may cause damage to your threads and void your warranty.

NOTE:
Product may vary slightly from the item pictured due to model upgrades. This manual may be subject to updates or changes.
Up to date manuals are available through our website at www.lifespanfitness.com.au

TABLE OF CONTENTS

I. Important Safety Instructions 03

II. Important Electrical Information 05

III. Important Operating Instructions 06

IV. Assembly Instructions 07

V. How to Move the Treadmill 16

VI. Operation Guide 17

VII. Exercise Guide 20

VIII. Maintenance Instructions 22

IX. Exploded Diagram 24

X. Parts List 26

XI. Warranty 31

I. IMPORTANT SAFETY INSTRUCTIONS

⚠ WARNING: Read all instructions before using this treadmill.

It is important your treadmill receives regular maintenance to prolong its useful life. Failing to regularly maintain your treadmill may void your warranty.

⚠ DANGER

To reduce the risk of electric shock disconnect your treadmill from the electrical outlet prior to cleaning and/or service work.

DO NOT USE AN EXTENSION CORD:

DO NOT ATTEMPT TO DISABLE THE GROUNDED PLUG BY USING IMPROPER ADAPTERS OR IN ANY WAY MODIFY THE CORD SET.

- Install the treadmill on a flat level surface with access to a 220-240 volt (50/60Hz), grounded outlet.
- Do not operate treadmill on deeply padded, plush or shag carpet. Damage to both carpet and treadmill may result.
- Do not block the rear of the treadmill. Provide a minimum of 1 metre clearance between the rear of the treadmill and any fixed object.
- Place your unit on a solid, level surface when in use.
- When running, make sure the plastic clip is fastened on your clothing. It is for your safety, should you fall or move too far back on the treadmill.
- Keep hands away from all moving parts.
- Never operate the treadmill if it has a damaged power cord or plug. When damaged, these must be replaced by the manufacturer, its service agent or similarly qualified persons in order to avoid a hazard.
- Keep the cord away from heated surfaces.
- Do not operate where aerosol spray products are being used or where oxygen is being administered. Sparks from the motor may ignite a highly gaseous environment.
- Never drop or insert any object into any openings.

- The treadmill is intended for indoor use, in a well-ventilated and insulated room.
- To disconnect, turn all controls to the off position, remove the safety key, and then remove the plug from the outlet.
- The pulse sensors are not medical devices. Various factors, including the user's movement, may affect the accuracy of heart rate readings. The pulse sensors are intended only as exercise aids in determining heart rate trends in general.
- Use the handrails provided; they are for your safety.
- Wear proper shoes. High heels, dress shoes, sandals or bare feet are not suitable for use on your treadmill. Quality athletic shoes are recommended to avoid leg fatigue.
- Before undertaking any type of exercise program, it is recommended that you consult a doctor.
- Injuries to health may result from incorrect or excessive training.
- This appliance is not intended for use by persons (including children) with reduced physical, sensory or mental capabilities, or lack of experience and knowledge, unless they have been given supervision or instruction concerning use of the appliance by a person responsible for their safety.
- **WARNING:** Heart rate monitoring systems may be inaccurate. If you feel faint stop exercising immediately.
- Children should not be allowed on or around the equipment, even when not in use.
- Children should be supervised to ensure that they do not play with this machine.
- Loose-fitting clothing or jewellery that could become an entanglement hazard should not be worn.
- Training shoes should be worn when using the equipment.
- Equipment must be used on a level and stable surface.
- All fixings should be checked before the equipment is used.
- All literature relating to the use of the equipment should be retained for future reference.
- Recommended operating temperature: 5-40°C.

! Remove the safety key after use to prevent unauthorized treadmill operation.

II. IMPORTANT ELECTRICAL INFORMATION

⚠ WARNING!

This treadmill requires the right power source in order to properly operate. For your safety, as well as the safety of others, please verify that the power source is correct before plugging the equipment. Any incorrect power source could cause significant damage to the equipment and/or user.

GROUNDING METHODS:

This product must be grounded. Grounding provides the least resistance for electrical current and will reduce the risk of electric shock. The plug must be plugged into an appropriate outlet that is properly installed and grounded in accordance with all local codes and ordinances. Ensure that the product is connected to an outlet which contains the same configuration as the plug. Do not use an adaptor for this product.

This product is for use on a nominal circuit and has a grounding plug that looks like the plug illustrated in sketch A. Make sure that the product is connected to an outlet having the same configuration as the plug. No adapter should be used with this product.

⚠ DANGER

Improper connection of the equipment-grounding conductor can result in risk of electric shock. Check with a certified electrician if you are in doubt as to whether the product is properly grounded. Do not modify the plug provided with the product. If it will not fit the outlet, have a proper outlet installed by an electrician.

⚠ WARNING!

1. NEVER use a ground fault circuit interrupt (GFCI) wall outlet with this treadmill. Route the power cord away from any moving part of the treadmill including the elevation mechanism and transport wheels.
2. NEVER operate the treadmill using a generator or UPS power supply.
3. NEVER remove any cover without first disconnecting power.
4. NEVER expose the treadmill to rain or moisture. This treadmill is not designed for use outdoors, near pools or in any other high humidity environment.

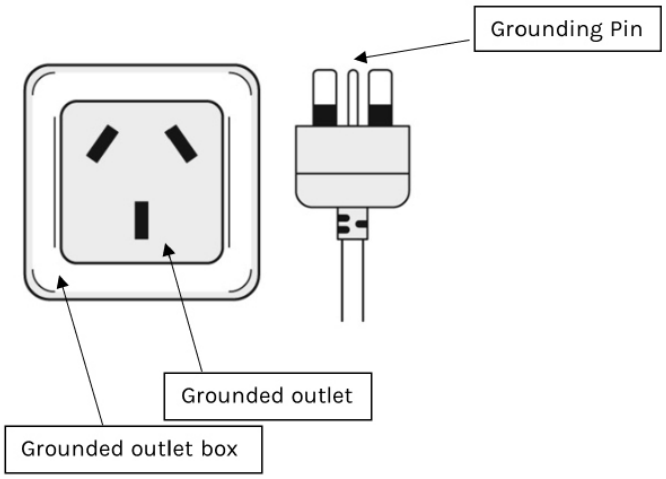

III. IMPORTANT OPERATING INSTRUCTIONS

- Understand that changes in speed and incline do not occur immediately. Set your desired speed on the computer console and release the adjustment key. The computer will obey the command gradually.

- Use caution while participating in other activities while walking on your treadmill, such as watching television, reading, etc. These distractions may cause you to lose balance or stray from walking in the centre of the belt; which may result in serious injury.

- This unit starts with at a very low speed. It is recommended to stand on the side rails and only step on the treadmill as it is moving on a slow speed. This will prolong the life of your motor and run the belt smoothly.

- In order to prevent losing balance and suffering unexpected injury, never mount or dismount the treadmill while the belt is moving at high speeds.

- Always hold on to handrail while making control changes.

- A safety key is provided with this machine. Removing the safety key will stop the walking belt immediately; the treadmill will shut off automatically. Inserting the safety key will reset the display.

- Do not use excessive pressure on console control keys. They are precision set to function properly with little finger pressure.

- Replace any defective components immediately. The machine must be kept out of use until repaired.

- Belt wear-in period: all treadmills make a certain type of thumping noise due to the belt riding over the rollers, especially new treadmills. This noise will diminish over time, although may not completely go away. The belt will stretch over time, causing it to ride smoother over the rollers.

IV. ASSEMBLY INSTRUCTIONS

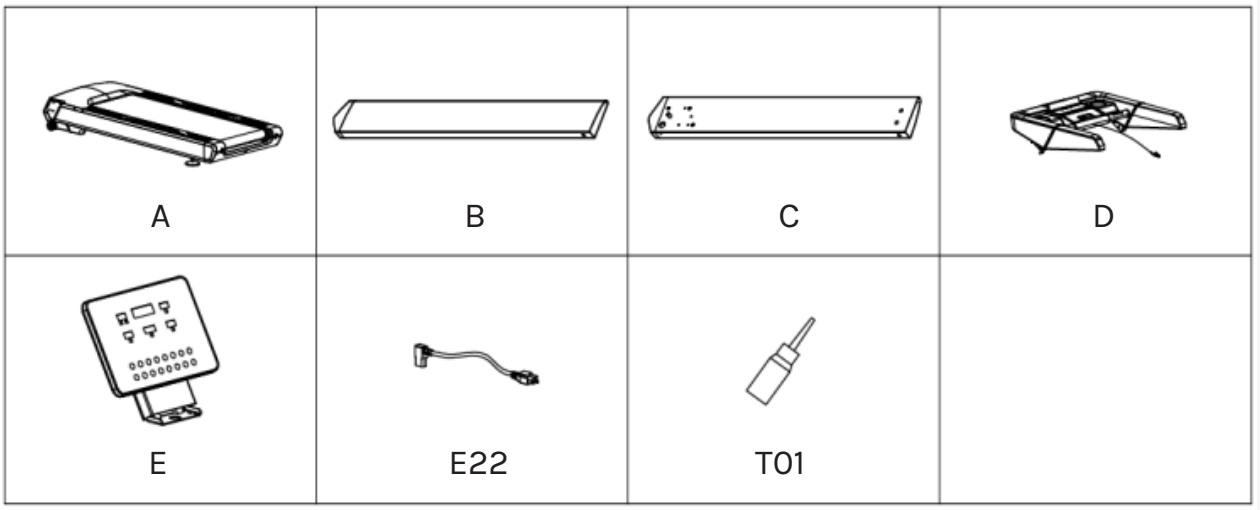

PARTS LIST

No.	Description	Qty
A	Main Frame	1
B	Left Upright Tube	1
C	Right Upright Tube	1
D	Console Frame	1

No.	Description	Qty
E	Console	1
E22	Power Wire	1
T01	Silicon Oil	1

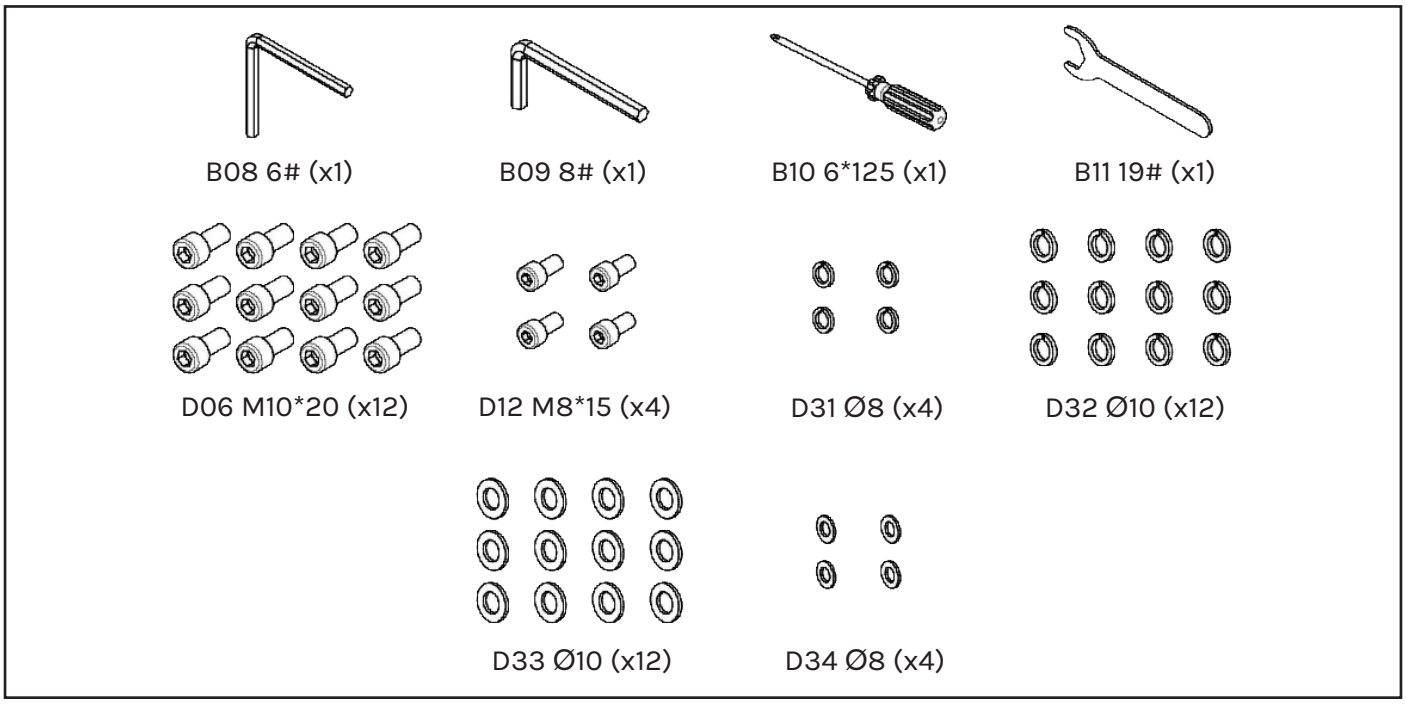

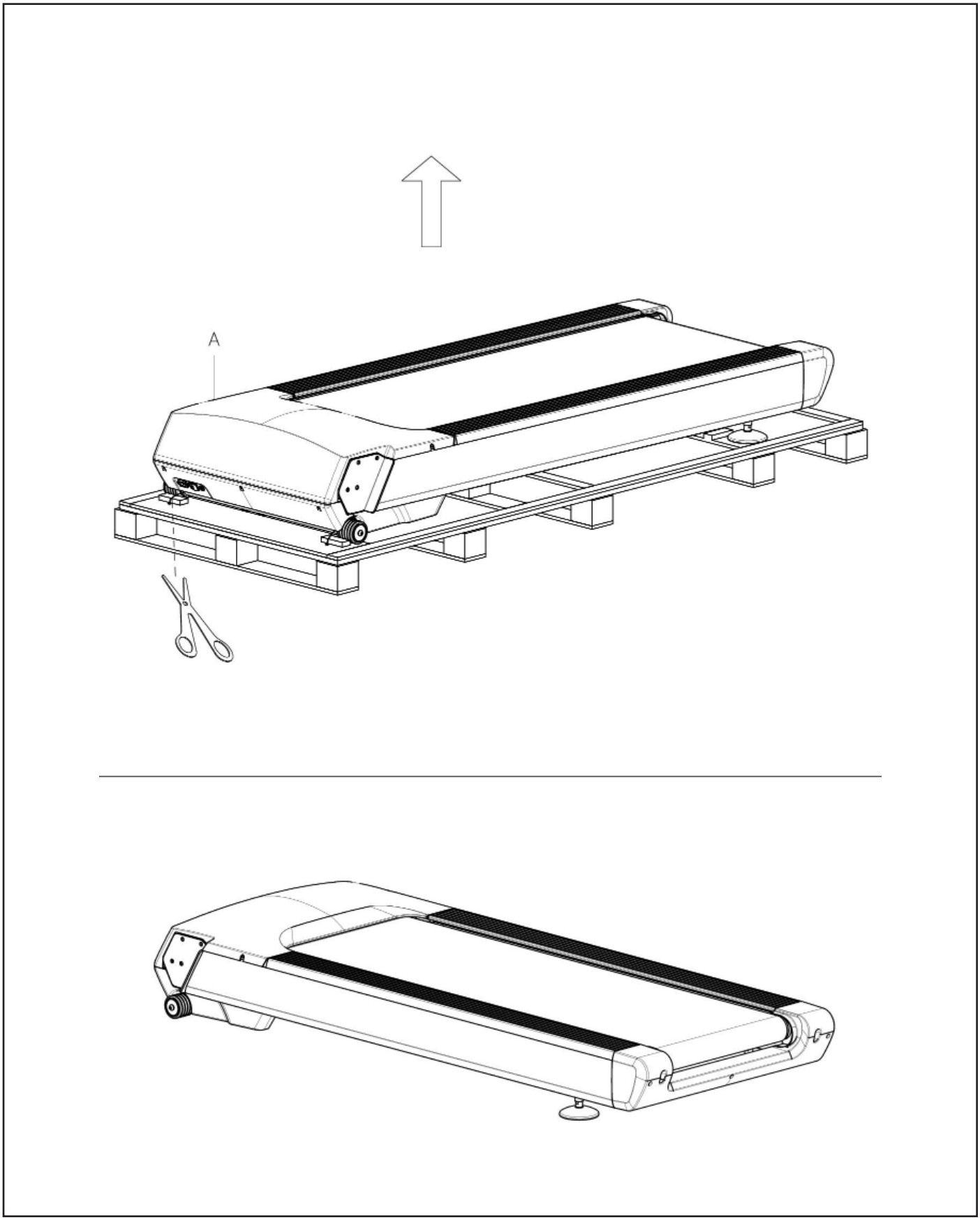

STEP 1

Open the carton and remove the contents. Place the Main Frame on level ground, ensure that you have a work area that is clean and has adequate space.

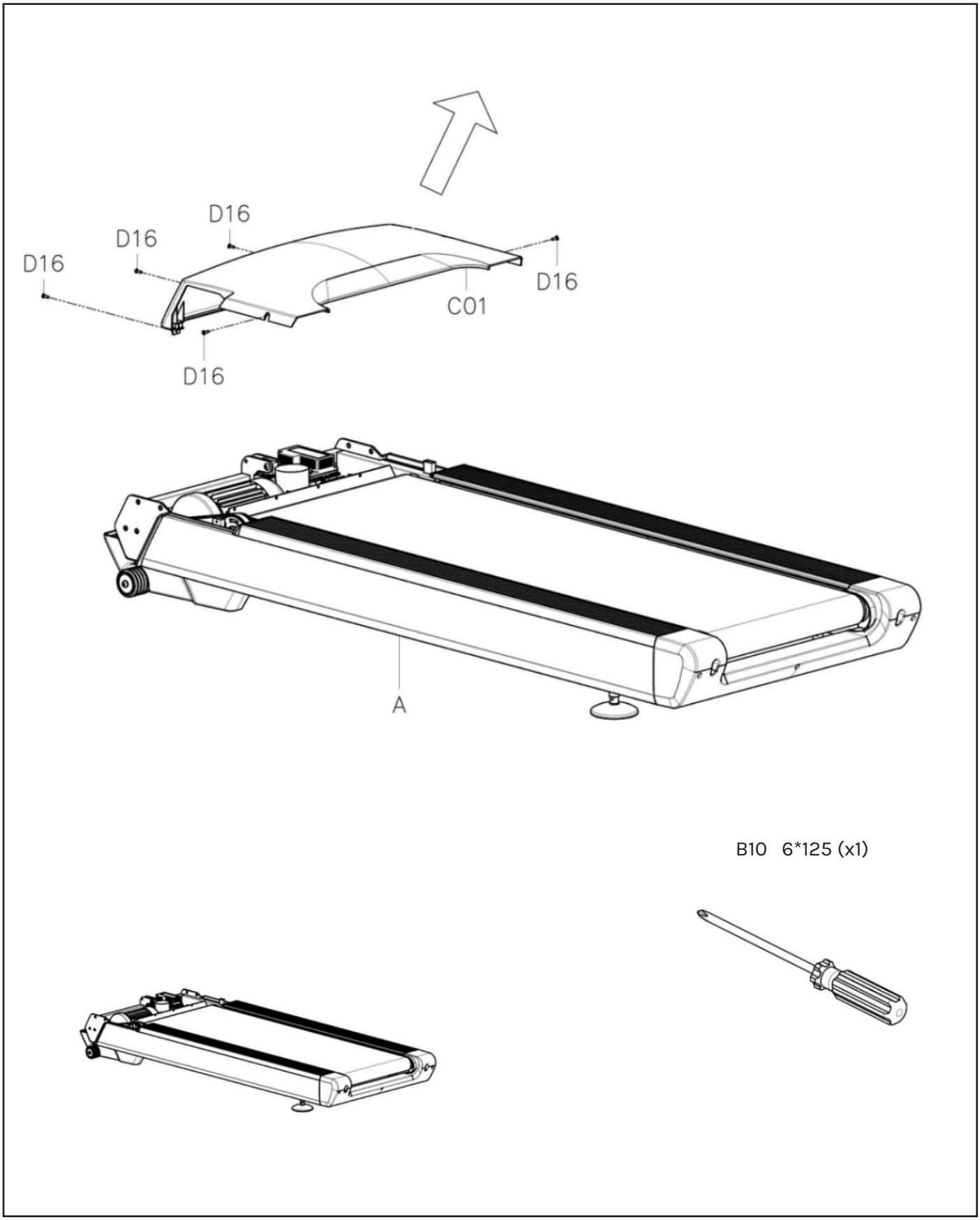

STEP 2

Loosen the Bolt (No. D16) on the Motor top cover (No. C01) by using Cross screwdriver (No. B10).

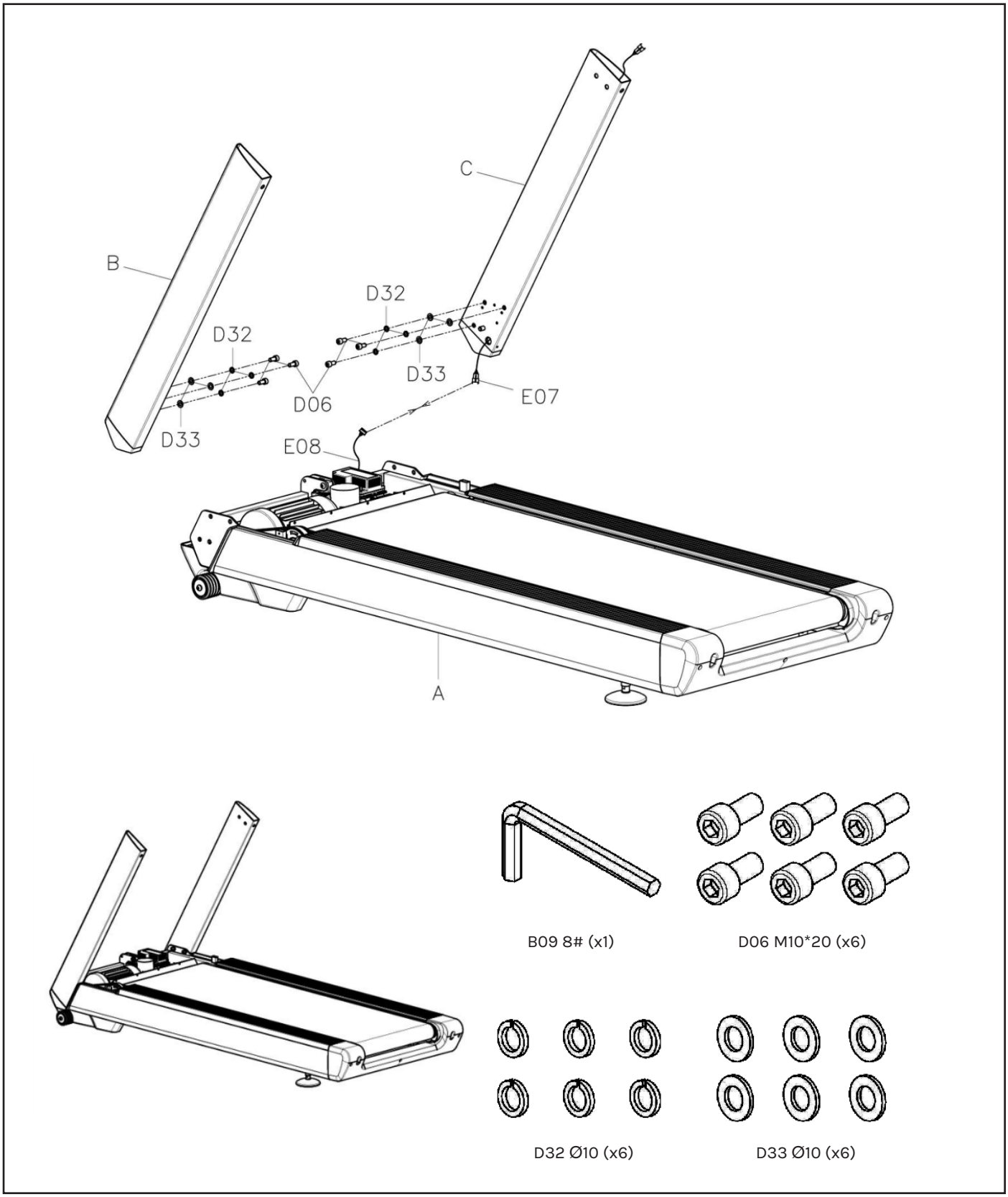

STEP 3

1. Connect the wire from Right upright tube (No. C) and Main base (No. A).
2. Support the Left & Right Upright Tubes (No. B & No. C) with your hands to prevent them from falling.
3. Attach the Left & Right Upright Tubes (No. B & No. C) to the Base Frame (No. A) by using 6 Bolts (No. D06), 6 Washers (No. D32) and 6 Washers (No. D33). Secure by using 8#Allen Wrench (No. B09).

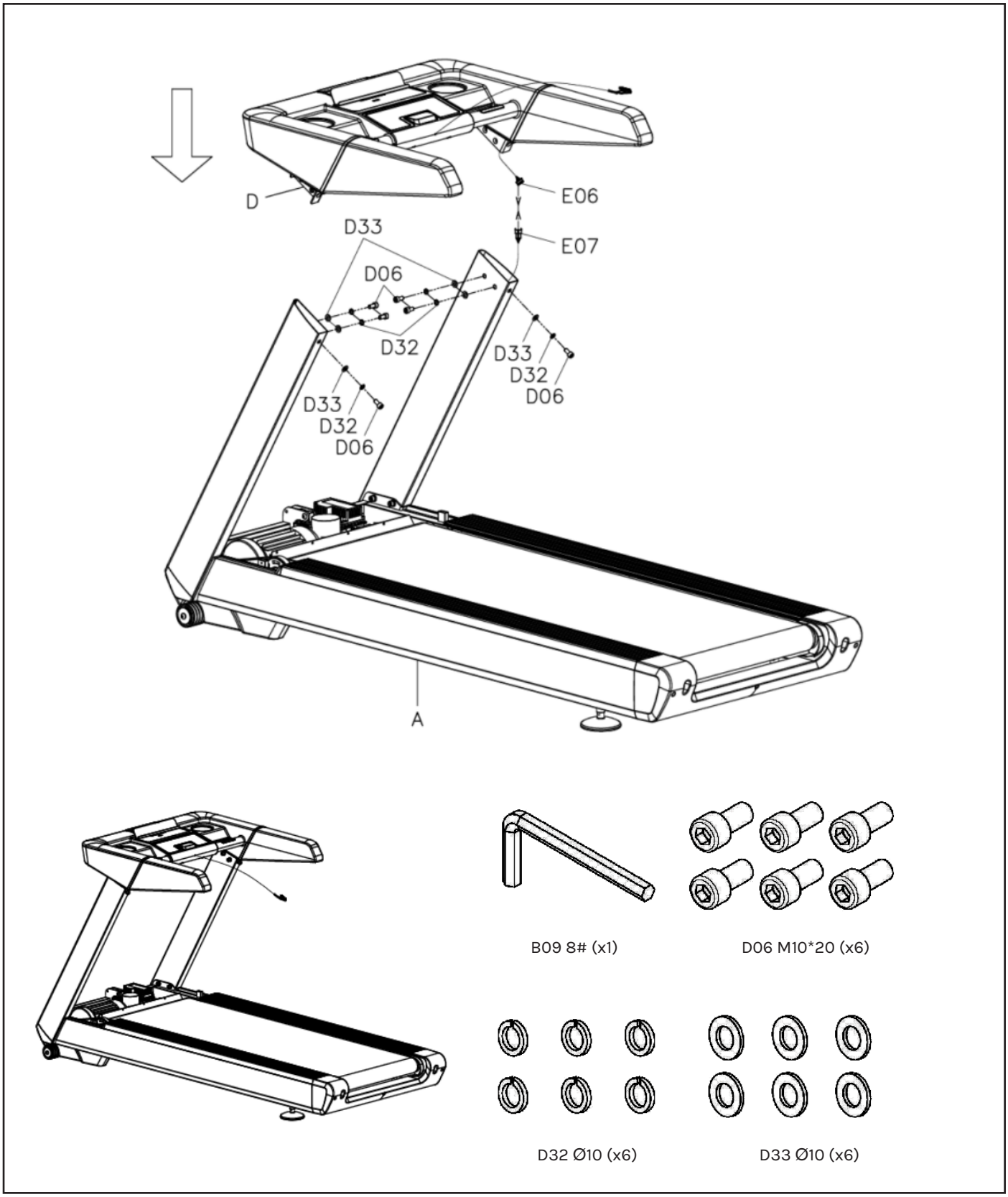

STEP 4

1. Connect the wire from Right upright tube (No. C) and Console base (No. D).
2. Attach the Left & Right Upright Tubes (No. B & No. C) to the Console base (No. D) by using 6 Bolts (No. D06), 6 Washers (No. D32) and 6 Washers (No. D33). Secure by using 8#Allen Wrench (No. B09).

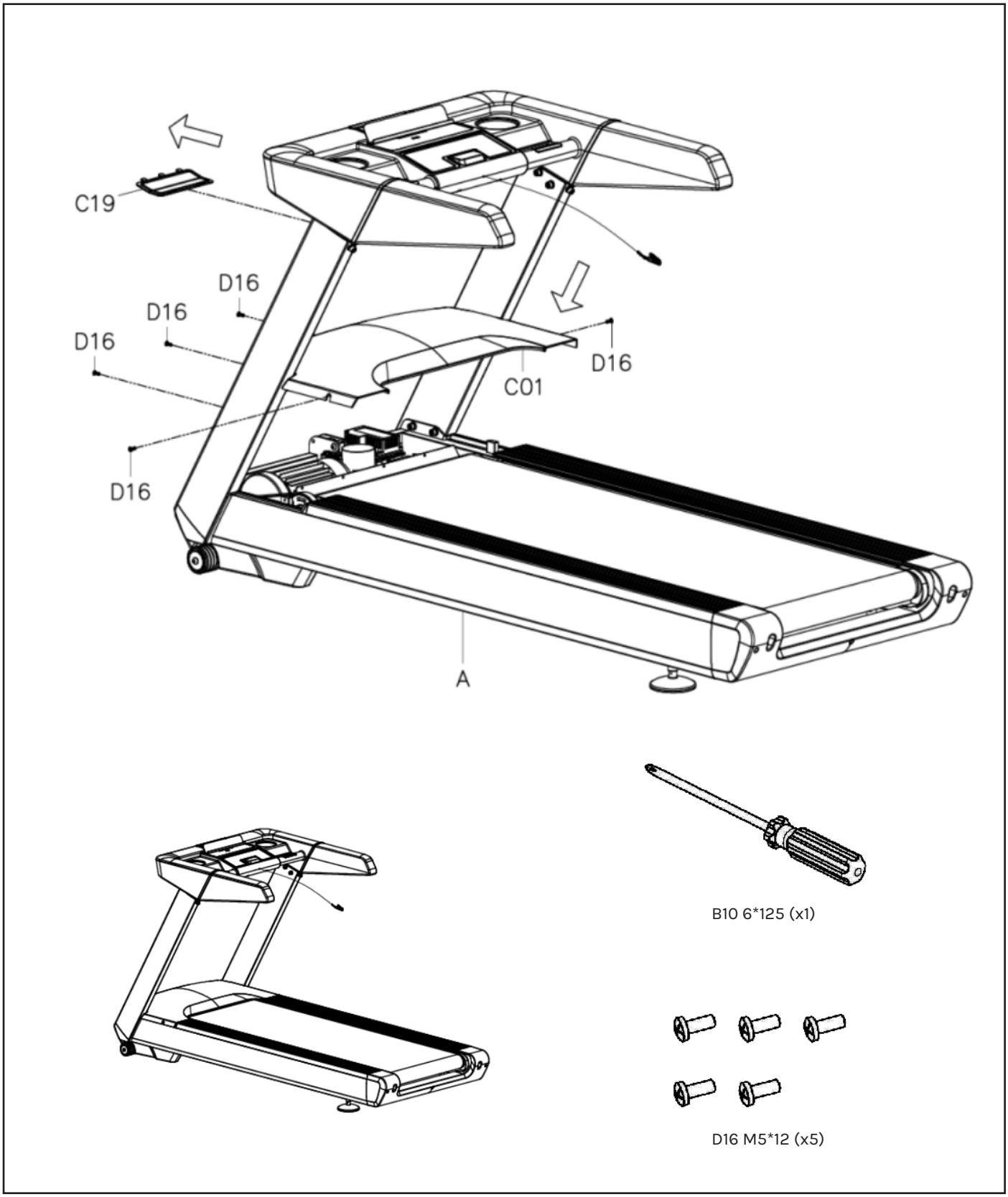

STEP 5

1. Attach the Bolt (No. D16) to the Motor top cover (No. C01) by using Cross screwdriver (No. B10).
2. Put out the Console screw cover (No. C19) from the Console base (No. D).

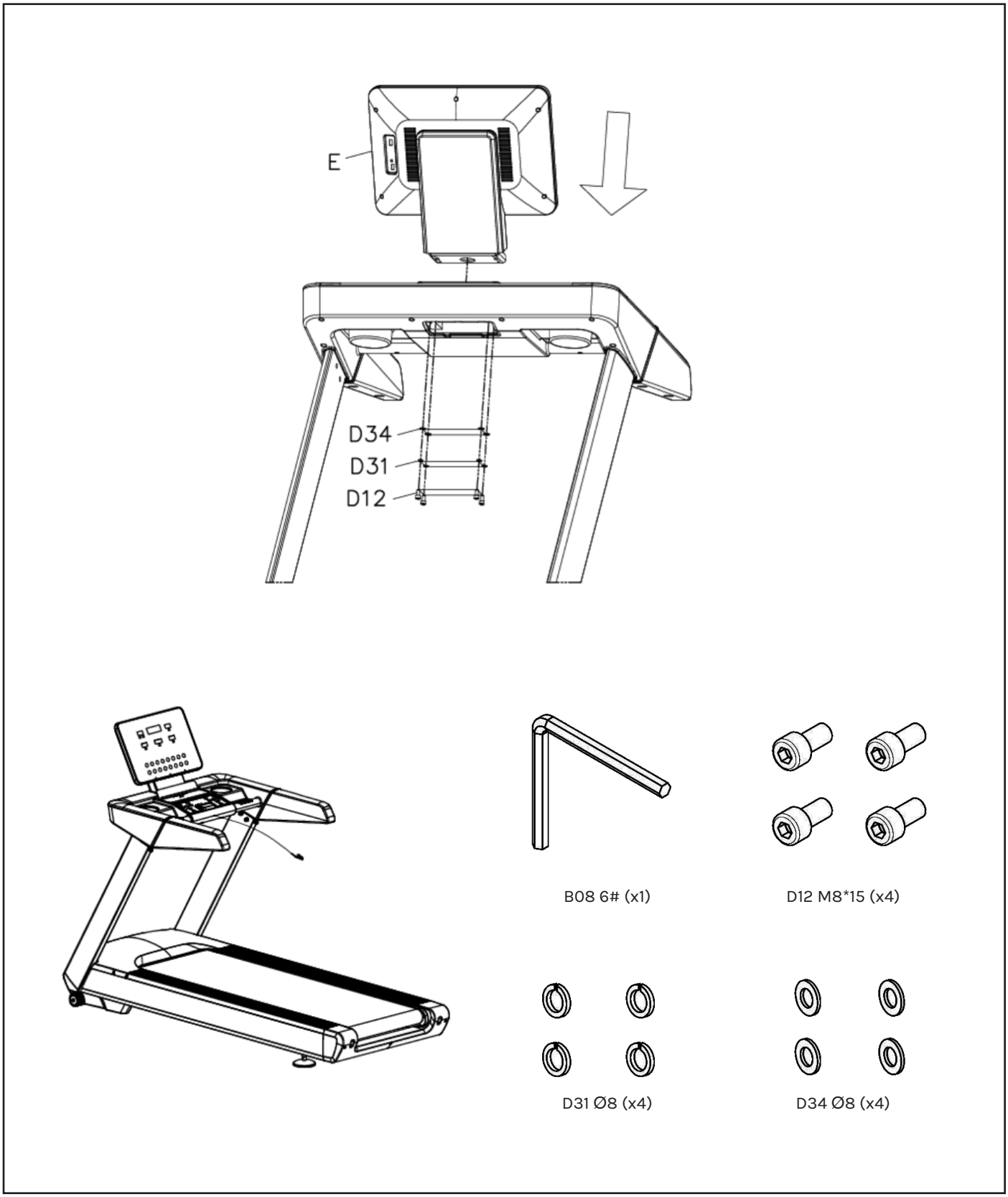

STEP 6

Attach the Console (No. E) to the Console base (No. D) by using 4 Bolts (No. D12), 4 Washers (No. D31) and 4 Washers (No. D34). Secure by using 6#Allen Wrench (No. B08).

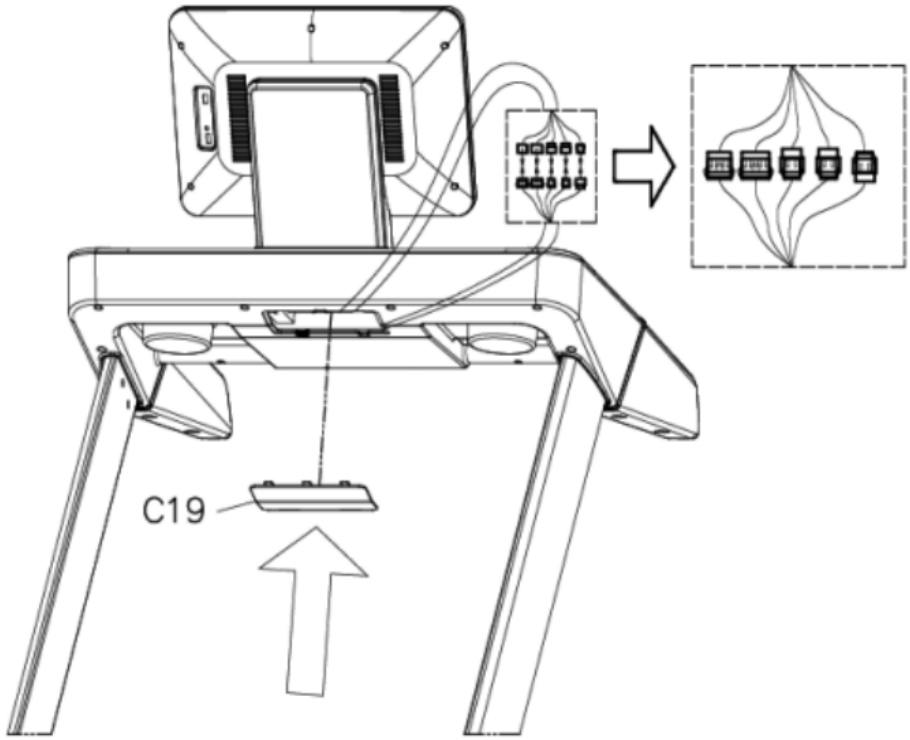

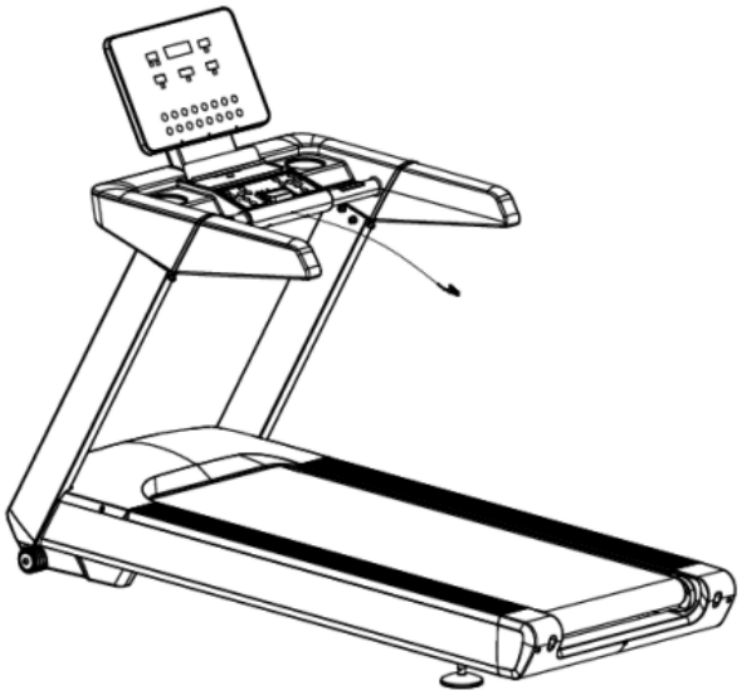

STEP 7

1. Connect the wire as above.
2. Attach the Console screw cover (No. C19) from the Console base (No. D)

The assembly is complete!

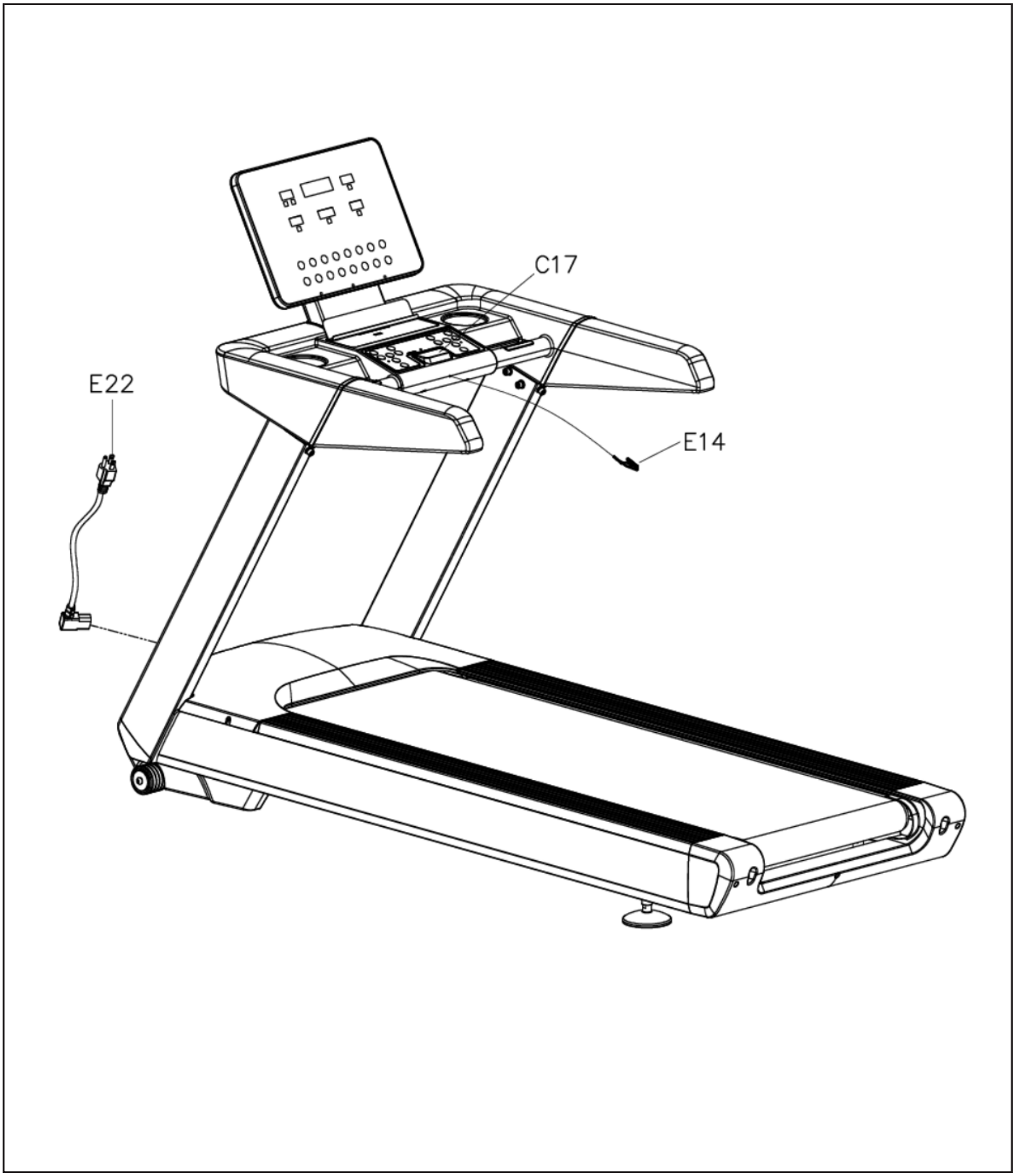

STEP 8

Connect the power cord to the back of the machine and plug to the wall socket. We don't recommend plugging on a Power board with other equipment as this is a high-powered equipment.

Turn on the power and you can begin workout. When not in use, you can turn off the power from the back switch or the wall switch.

V. HOW TO MOVE THE TREADMILL

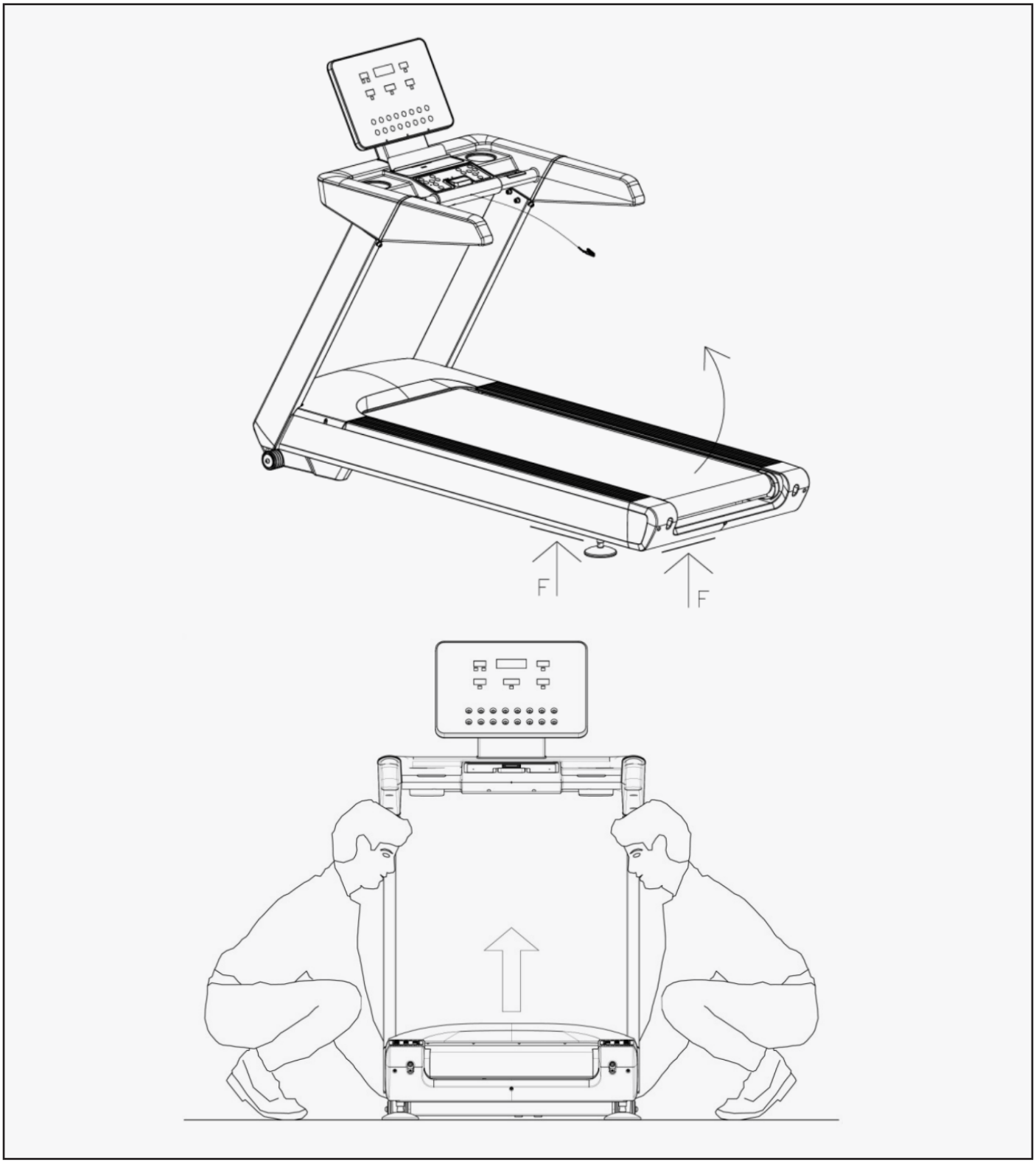

NOTE: Slowly lift when lifting. If feel too heavy or your own strength can not lift, you need to give up or replace the person whose strength can support the weight of the machine to complete the movement.

VI. OPERATION GUIDE

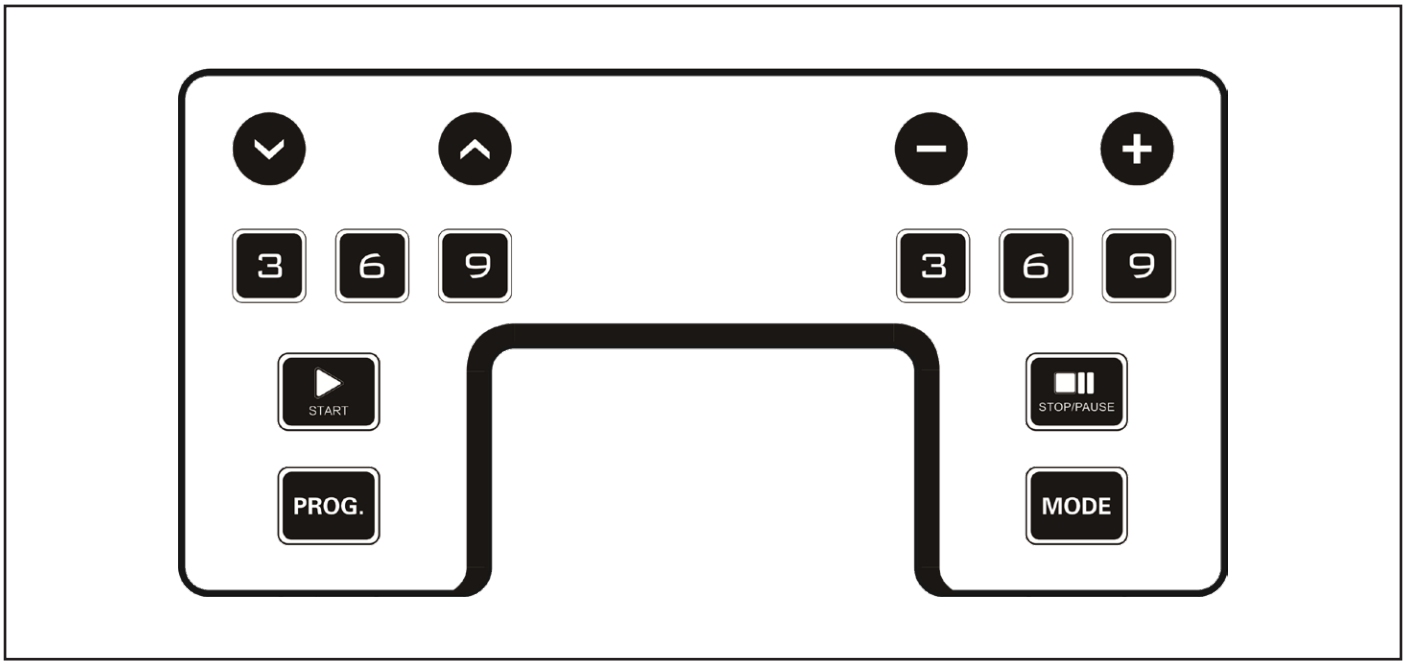

BUTTON FUNCTIONS:

1. **INCLINE -:** Press this button to reduce the incline.

2. **INCLINE +:** Shows speed and program.

3. **INSTANT INCLINE:** Press 3, 6, 9 for quick incline adjustment.

4. **START:** Press this button to start the machine.

5. **PROG:** Press this button to choose between 24 programs, 3 user programs and body fat.

6. **SPEED -:** Press this button to reduce the speed.

7. **SPEED +:** Press this button to increase the speed.

8. **INSTANT SPEED:** Press 3, 6, 9 for quick speed adjustment.

9. **STOP/PAUSE:** Press 3, 6, 9 for quick speed adjustment.

10. **MODE:** Selection button. Press this button to choose between time, distance, calories workout targets.

MEDIA HUB:

1. **MP3 INPUT:** Insert MP3 cable to display the music from device.

2. **USB INPUT:** Charging your device.

COMPUTER FUNCTIONS:

1. **INCLINE:** Displays current incline. Press INCLINE+/- to adjust the incline of the machine.

2. **SPEED:** Displays current speed. Press SPEED+/- to adjust the speed of the machine.

3. **CALORIES:** Display the calories during workout.

4. **TIME:** Display the time duration of workout.

5. **DISTANCE:** Display the distance of the workout.

6. **PULSE:** Display user's heart rate. This date is just for reference and cannot be regarded as medical use. Both hands must hold the pulse sensors for about 5 seconds and the console will show users pulse value.

7. **MODE:** Press Mode button to view TIME, DISTANCE, CALORIES, 24 programs, 3 User programs and body fat setting.

7.1 Setting TIME, DISTANCE, CALORIES: From standby mode, press Mode button, the corresponding light of TIME, DISTANCE, CALORIES will come on, select between TIME, DISTANCE, CALORIES.

- Press SPEED+/- or INCLINE+/- to set the workout target value.
- Press the START button, treadmill will run after 3 seconds.
- Press SPEED+/- to adjust the speed.
- Press INCLINE+/- to adjust the incline.

8. **24 Built-in Programs:** From standby mode, press PROG button, console will show 24 programs, select between 24 programs.

- Press SPEED+/- or INCLINE+/- to set the workout target value.
- Each program can be divided into 10 sections. Machine will beep 3 times when starting a new section.
- You can still press SPEED+/- or INCLINE+/- to change the speed and incline during each section. However, as it moves to the next section it will resume its pre-set Speed/Incline for that program.
- Once the program is completed it will beep 3 times.

8.1 User Programs: From standby mode, press PROG button, console will show 3 User programs, select between 3 User programs.

- Press SPEED+/- or INCLINE+/- to set the workout target value.
- Each program can be divided into 10 sections. The machine will beep 3 times when starting a new section. Use Mode to navigate to the sections to make changes on Speed and Incline.

- You can still press SPEED+/- or INCLINE+/- to change the speed and incline during each program.
- Once the program is completed it will beep 3 times.
- Press the START button, treadmill will run after 3 seconds.
- Press SPEED+/- to adjust the speed.
- Press INCLINE+/- to adjust the incline.

8.2 Body Fat Test: From standby mode, press PROG button until you get to FAT.

- Press Mode button to enter information.
  Set value with SPEED+/- from F-1 to F-4 (F-1 GENDER, F-2 AGE, F-3 HEIGHT, F-4 WEIGHT)
- Press Mode button to enter F-5 (F—5 BODY FAT TEST), hold hands on the hand pulse sensor, the console will display your body fat value after 3 seconds.
- The body fat value is intended as a guide only, and is not medical data.

F-1	Gender	01 Male	02 Female
F-2	Age	10-99	
F-3	Height	100-200cm	
F-4	Weight	20-150kg	
F-5	FAT	≤19	Under Weight
	FAT	= (20---25)	Normal Weight
	FAT	= (26---29)	Overweight
	FAT	≥30	Obesity

HANDPULSE FUNCTION:

Hold on the pulse sensor for about 5 seconds, the screen will show user's pulse value. This data is just for reference and cannot be regarded as medical data.

LUBRICATION REMINDER FUNCTION:

This machine has lubrication reminder function. After every total running distance of 300km, the treadmill screen will remind with lubrication. Please read the user's manual first.

ENERGY SAVING FUNCTION:

To reduce energy consumption, this treadmill will enter sleeping mode if it is without any operation for 10 minutes. The screen will give reminders before entering sleep mode. Once the machine enters sleep mode, please take off safety key and insert again to awaken the system.

POWER ON (I) AND POWER OFF (O)

Switch off the power: You can switch off the power to stop the treadmill, this will not cause a problem to the machine.

VII. EXERCISE GUIDE

PLEASE NOTE:

Before beginning any exercise program, consult your physician. This is important especially for individuals over the age of 45 or with pre-existing health problems.

The pulse sensors are not medical devices. Various factors, including the user's movement, may affect the accuracy of heart rate readings. The pulse sensors are intended only as an exercise aid in determining heart rate trends in general.

Exercising is a great way to control your weight, improve your fitness and reduce the effect of aging and stress. The key to a healthy lifestyle is to make exercise a regular and enjoyable part of your everyday life.

The condition of your heart and lungs and how efficient they are in delivering oxygen via your blood to your muscles is an important factor to your fitness. Your muscles use this oxygen to provide enough energy for daily activity. This is called aerobic activity. When you are fit, your heart will not have to work so hard. It will pump a lot fewer times per minute, reducing the wear and tear of your heart.

So as you can see, the fitter you are, the healthier and greater you will feel.

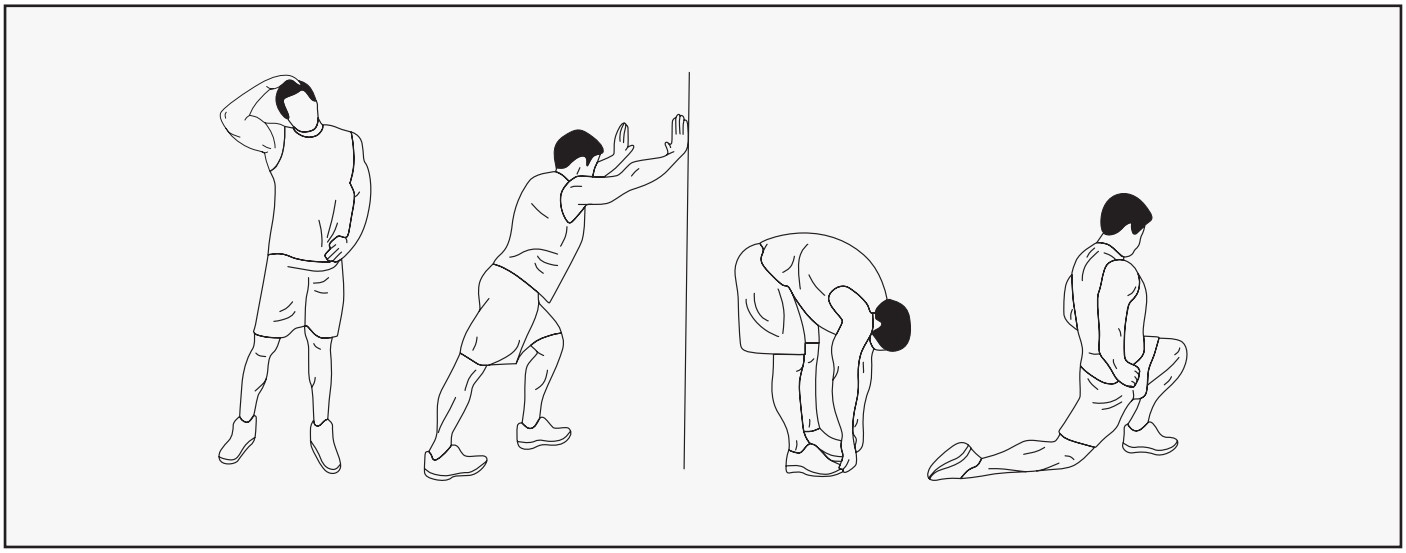

WARM UP

Start each workout with 5 to 10 minutes of stretching and some light exercises. A proper warm-up increases your body temperature, heart rate and circulation in preparation for exercise. Ease into your exercise.

After warming up, increase the intensity to your desired exercise program. Be sure to maintain your intensity for maximum performance. Breathe regularly and deeply as you exercise.

COOL DOWN

Finish each workout with a light jog or walk for at least 1 minute. Then complete 5 to 10 minutes of stretching to cool down. This will increase the flexibility of your muscles and will help prevent post-exercise problems.

WORKOUT GUIDELINES

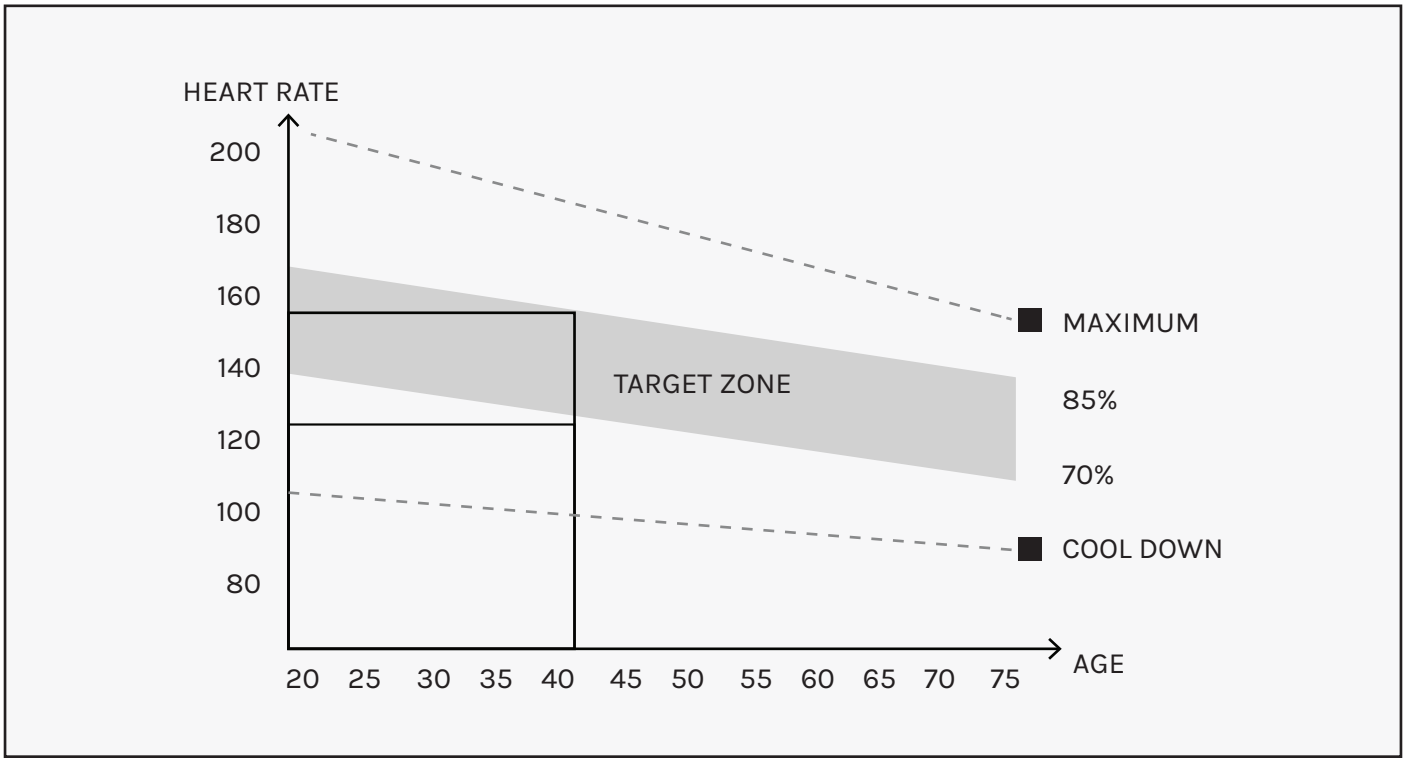

This is how your pulse should behave during general fitness exercise. Remember to warm up and cool down for a few minutes.

The most important factor here is the amount of effort you put in. The harder and longer you work, the more calories you will burn.

VIII. MAINTENANCE INSTRUCTIONS

General cleaning will help prolong the life and performance of your treadmill. Keep the unit clean and maintain it by dusting the components on a regular basis. Clean both sides of the running belt to prevent dust from accumulating underneath the belt. Keep your running shoes clean so that dirt from your shoes does not wear out the running board and belt. Clean the surface of the running belt with a clean damp cloth.

- To better maintain the treadmill and prolong its life it is suggested that the machine be powered off for 10 minutes every 2 hours and fully powered off whenever not in use.

- A loose Running Belt will result in the runner sliding off when running, while too tight of a Running Belt will result in decrease to the motors performance and create more friction between the roller and running belts. The most suitable tightness for the belts is pulled out 50-75mm from the Running Board.

CENTERING THE RUNNING BELT

Place the treadmill on level ground and set it at 6-8kph to check if the Running Belt drifts.

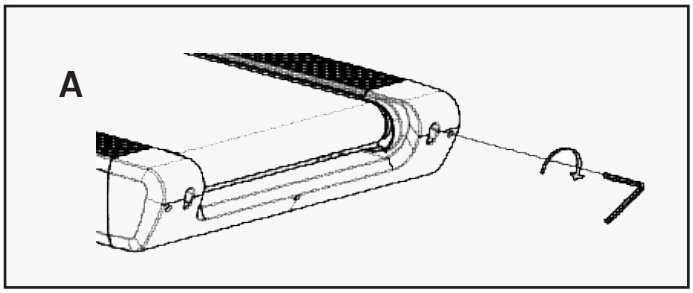

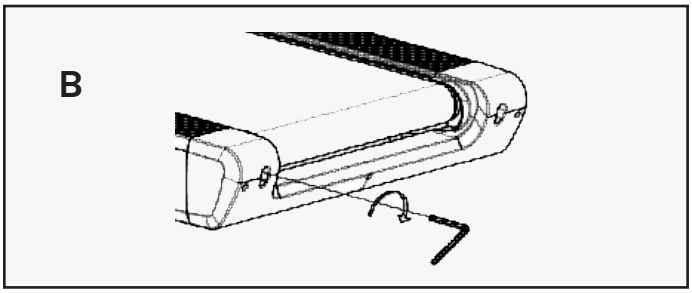

If the Running Belt moves to the right, turn the adjusting bolt on the right side 1/4 turn clockwise, then turn the left adjustment bolt 1/4 turn counterclockwise. If the belt does not move, repeat this step until it centers. Refer to figure A.

If the Running Belt moves to the left, turn the adjusting bolts on the left side 1/4 of a turn clockwise, then turn the right adjustment bolt 1/4 turn counterclockwise. If the belt does not move, repeat this step until it centers. Refer to figure B.

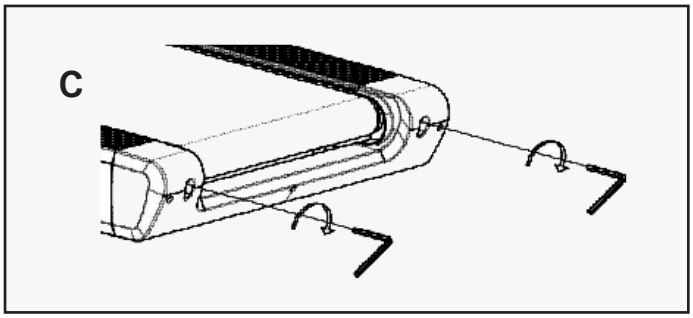

Over time the Running Belt will loosen. To tighten the belt, turn the Left & Right-side adjustment bolts one full turn clockwise, check the tension of the belt. Continue this process until belt is at the correct tension. Make sure to adjust both sides equally to ensure correct belt alignment. Refer to figure C.

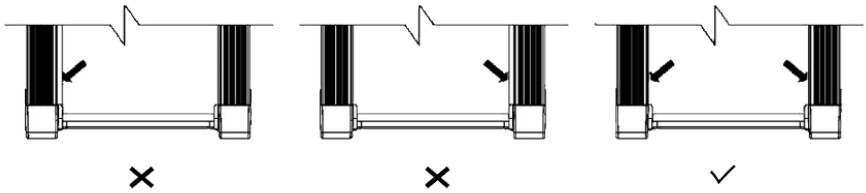

LUBRICATING THE TREADMILL

IMPORTANT NOTE:

You will need to lubricate your treadmill before the first use.

RUNNING BELTS & TREADMILL LUBRICANT:

Lubricating the running board and running belt is essential as the friction between the two affects the life span and function of the treadmill, therefore it is suggested that the running board and belt be inspected regularly.

WARNING:

Always unplug the treadmill from the electrical outlet before cleaning, lubricating, or repairing the unit.

HOW TO LUBRICATE:

1. Raise the belt up on one side and apply lubricant to the running deck. Use a rag to thoroughly wipe the lubricant over the running deck. Repeat this process for the other side.
2. The moving parts should turn freely and quietly. Abnormality of moving parts will affect the safety of the equipment. Inspect and tighten bolts regularly.
3. To better maintain the treadmill and prolong its lifespan, it is suggested that maintenance be done on a regular basis.

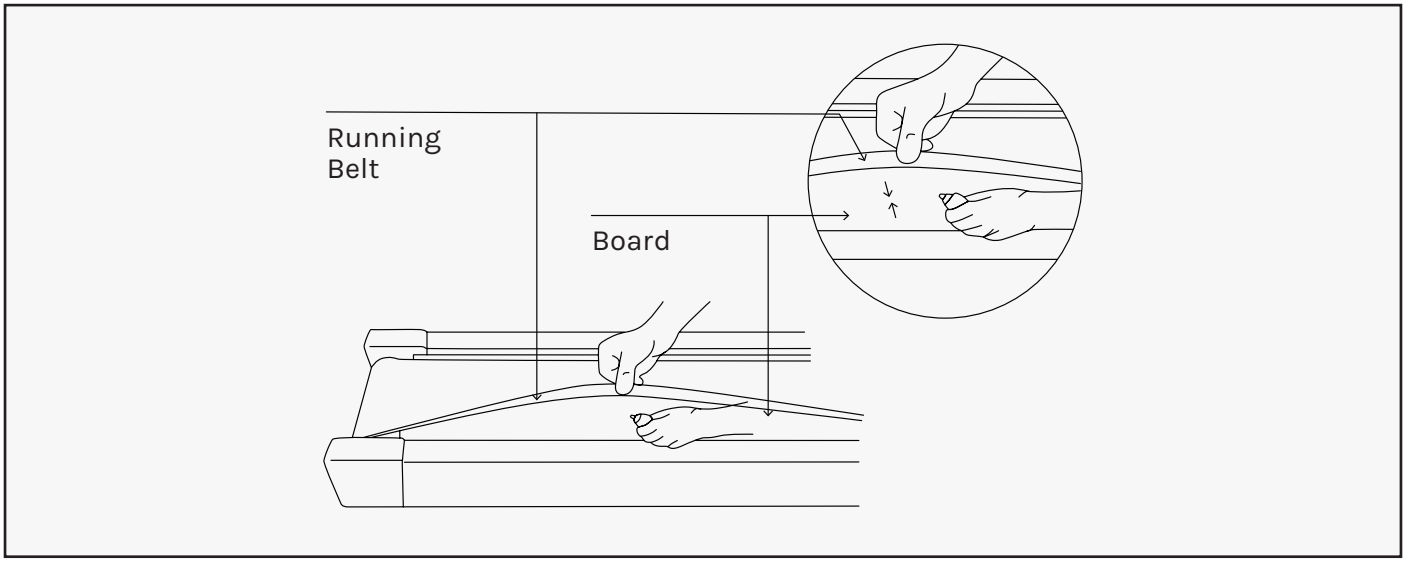

The following timetable is recommended:

- Light user (less than 3 hours/week) - every six months
- Medium user (3-5 hours/week) - every three months
- Heavy user (more than 5 hours/week) - every two months

IX. EXPLODED DIAGRAM

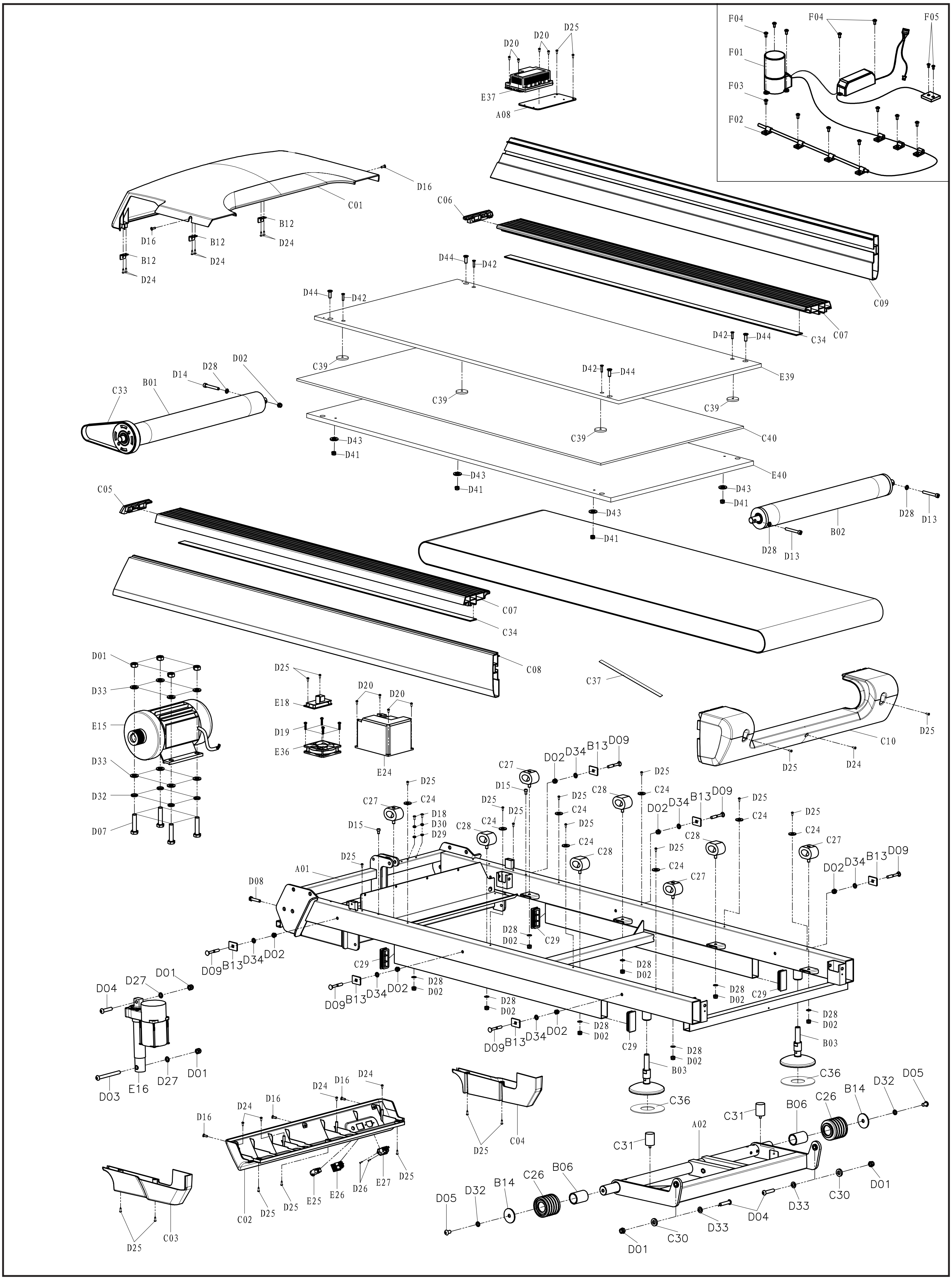

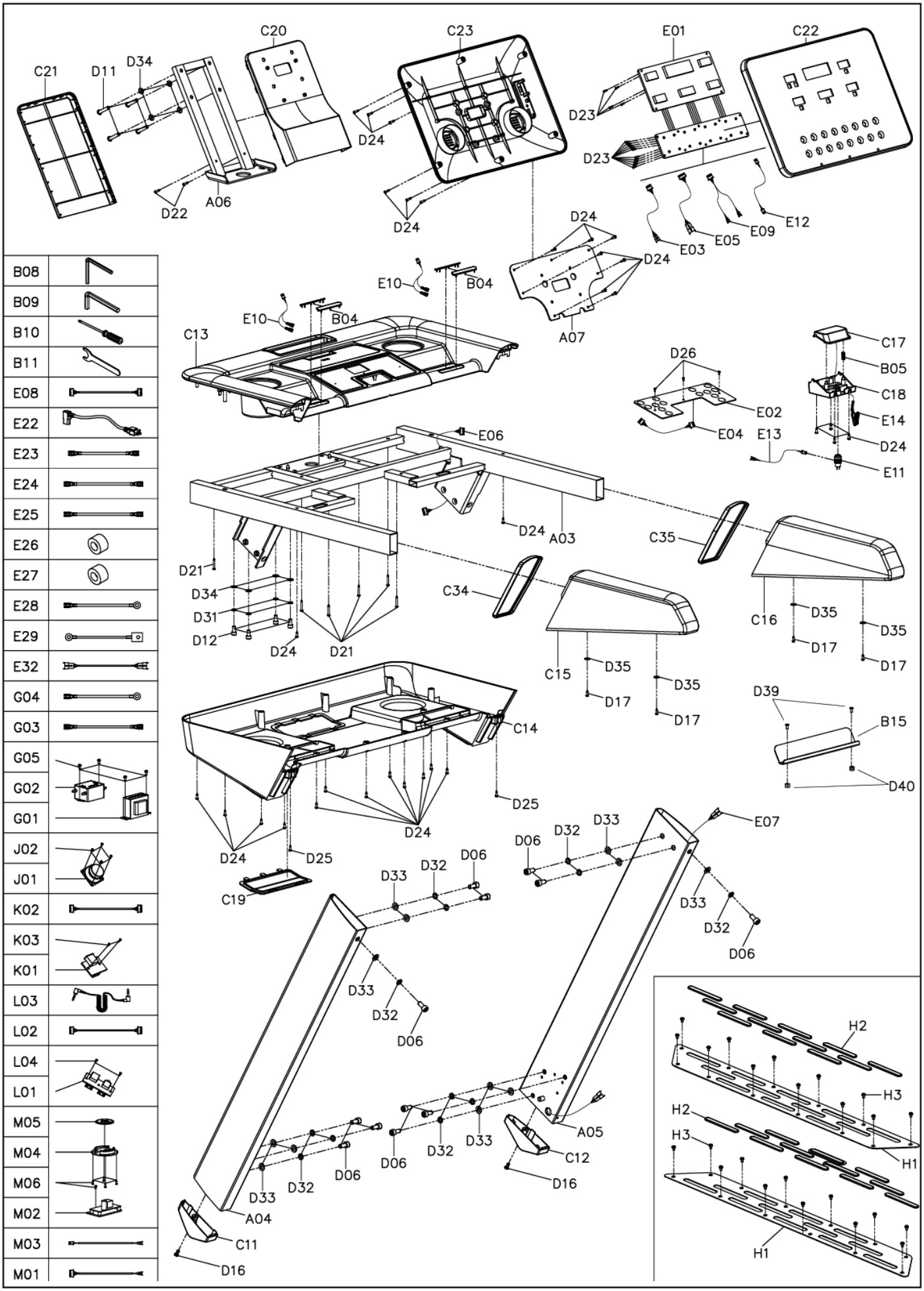
C21
D11
D34
C20
C23
E01
C22
D23
D24
D23
D22
A06
D24
D24
E03
E05
E09
E12
D24
A07
E10
B04
E10
B04
C13
C17
B05
C18
E14
D24
E11
D26
E02
E04
E13
E06
D24
A03
C35
D21
D34
D31
D12
D24
D21
C34
C16
D35
D17
D35
D17
C15
D35
D17
D35
D17
D39
B15
D40
C14
D25
D24
D24
D25
C19
D06
D32
D33
E07
D33
D32
D06
D33
D32
D06
D33
D32
D06
D33
D32
D06
A05
C12
D16
D06
D32
D33
D06
D32
D33
A04
C11
D16
H2
H3
H2
H3
H1
H1
B08
B09
B10
B11
E08
E22
E23
E24
E25
E26
E27
E28
E29
E32
G04
G03
G05
G02
G01
J02
J01
K02
K03
K01
L03
L02
L04
L01
M05
M04
M06
M02
M03
M01

X. PARTS LIST

Key No.	Description		Qty.
A01	Main Frame		1
A02	Incline Bracket		1
A03	Console Base Bracket		1
A04	Left Upright Tube		1
A05	Right Upright Tube		1
A06	Panel Connecting Bracket		1
A07	Screen Holder		1
A08	Power Box Fixing Plate		1
A09	Back-end Cover Support Tube		1
B01	Front Roller		1
B02	Back Roller		1
B03	Versatile Foot Pad		2
B04	Pulse Steel Plate		4
B05	Spring		1
B06	Wheel Sleeve		2
B07	Side Rail Pressing Plate		2
B08	6# Allen Wrench	6mm	1
B09	8# Allen Wrench	8mm	1
B10	Cross Screwdriver		1
B11	Open Wrench		1
B12	Motor Cover Thread Board		3
B13	Side Rail Pressing Plate		6
B15	iPad Holder		1
C01	Motor Top Cover		1
C02	Motor Bottom Cover		1
C03	Motor Left Side Cover		1

Key No.	Description	Qty.
C04	Motor Right Side Cover	1
C05	Left Side Rail Decoration	1
C06	Right Side Rail Decoration	1
C07	Top Side Rail	2
C08	Left Side Rail	1
C09	Right Side Rail	1
C10	Back-end Cover	1
C11	Left Upright Tube Cover	1
C12	Right Upright Tube Cover	1
C13	Console Top Cover	1
C14	Console Bottom Cover	1
C15	Left Handlebar	1
C16	Right Handlebar	1
C17	Emergency Button	1
C18	Button Holder	1
C19	Console Screw Cover	1
C20	Console Support Top Cover	1
C21	Console Support Bottom Cover	1
C22	Panel Top Cover	1
C23	Panel Bottom Cover	1
C24	Plastic Side Rail Gasket	8
C25	Eva Pad	4
C26	Wheel	2
C27	Cushion	4

Key No.	Description		Qty.
C28	Cushion		6
C29	Square Tube Plug		4
C30	Plastic Gasket		2
C31	Cylindrical Cushion		2
C32	Running Belt		1
C33	Motor Belt		1
C34	Left Handlebar Decorative Ring		1
C35	Right Handlebar Decorative Ring		1
C36	Rubber Pad		2
C37	Holder		1
C39	Running board pad		4
C40	Raw cotton		1
D01	Nut	M10	8
D02	Nut	M8	17
D03	Bolt	M10*105	1
D04	Bolt	M10*45	3
D05	Bolt	M10*20	2
D06	Bolt	M10*30	12
D07	Bolt	M10*45	4
D08	Bolt	M8*40	1
D09	Bolt	M8*55	6
D10	Bolt	M8*35	4
D11	Bolt	M8*40	4
D12	Bolt	M8*15	4
D13	Bolt	M8*65	2
D14	Bolt	M8*60	1
D15	Bolt	M6*10	2
D16	Bolt	M5*12	7
D17	Screw	ST4.2*19	4
D18	Bolt	M5*10	2
D19	Bolt	M4*30	4
D20	Bolt	M4*12	8
D21	Screw	ST4.2*30	6

Key No.	Description		Qty.
D22	Screw	ST4.2*25	2
D23	Screw	ST2.9*8	20
D24	Screw	ST4.2*12	41
D25	Screw	ST4.2*12	25
D26	Screw	ST2.9*8	5
D27	Lock Washer	10	2
D28	Lock Washer	8	13
D29	Lock Washer	5	3
D30	Spring Washer	5	3
D31	Spring Washer	8	4
D32	Spring Washer	10	18
D33	Flat Washer	10	22
D34	Flat Washer	8	14
D35	Big Washer	ϕ5*ϕ15*1	4
D36	Bolt	M5*20	4
D37	Bolt	8	3
D38	Screw	ST4.2*12	2
D39	Bolt	M5*15	2
D40	Nut	M5*H5.5*	2
D41	Nut	M6	4
D42	Bolt	M6*40	4
D43	Flat washer	6	4
D44	Bolt	M8*25	4
E01	Console		1
E02	Touch Button Board		1
E03	Touch Button Top Signal Wire		1
E04	Touch Button Bottom Signal Wire		1
E05	Console Top Signal Wire		1
E06	Console Middle Signal Wire 1		1
E07	Console Middle Signal Wire 2		1
E08	Console Bottom Signal Wire		1
E09	Hand Pulse Top Signal Wire		1

Key No.	Description		Qty.
E10	Hand Pulse Bottom Signal Wire		2
E11	Microswitch		1
E12	Switch Top Signal Wire		1
E13	Switch Bottom Signal Wire		1
E14	Safety Key		1
E15	AC Motor		1
E16	Incline Motor		1
E17	Running Board		1
E18	Inverter		1
E19	Overload Protecter		1
E20	Switch On-Off		1
E21	Power Socket		1

Key No.	Description		Qty.
E22	Power Wire		1
E23	AC Signal Wire	200 Brown	1
E24	AC Signal Wire	350 Brown	2
E25	AC Signal Wire	350 Blue	2
E26	Magnetic Ring		1
E27	Magnetic Core		3
E28	Ground Wire	350	2
E29	Running Board Ground Wire	350	2
E30	Fan and Fan Wire		1
E31	Inverter Power Box		1
E32	Power Box Wire		1
E39	Running board 1		1
E40	Running board 2		1

OPTIONAL PARTS LIST

Key No.	Description		Qty.
F01	Oiling System		1
F02	Glass Tube Fixing Knob		7
F03	Screw	ST4.2*12	7
F04	Bolt	M4*12	5
F05	Screw	ST2.9*8	2
G01	Filter		1
G02	Inductor		1
G03	AC Signal Wire		1
G04	Ground Wire		1
G05	Screw	ST4.2*12	4
H01	Aluminum Alloy Non-slip Pad		2
H02	Rubber Washer		24
H03	Screw	ST4.2*12	24
J01	Specker		2
J02	Screw	ST2.9*8	8
K01	USB Module		1

Key No.	Description		Qty.
K02	USB Connecting Wire		1
K03	Screw	ST2.9*8	2
L01	MP3 Module		1
L02	MP3 Data Wire		1
L03	MP3 Connecting Wire		1
L04	Screw	ST2.9*8	2
M01	Wireless Charging Pinboard Wire		1
M02	Wireless Charging Pinboard		1
M03	Wireless Charging Board Wire		1
M04	Wireless Charging Board		1
M05	Wireless Charging Base		1
M06	Screw	ST2.9*8	5

TROUBLESHOOTING

Issue	Solution
Computer not turning on after plugging to power	1. Please check if the overload protect jump, if yes, please press it, let it continue to work. 2. Check if the wires of power switch, overload protect, control board and the transformer are connected properly. 3. Remove the upright tube and check connection between each wire, make sure each wire is plugged in properly. If wires are damaged, please change the wire. 4. Check the transformer is working. If not, you will need to change it.
Display E01	**Message Failure:** **Probable Reason:** The wires from computer and bottom control board didn't connect well, please check each wire. If the wire is damaged, then change the wires. If this does not fix the issue, then change to a new transformer.
Display E03	**Solution Inverter Overvoltage:** Check if the power supply voltage is abnormal and if it is 50% higher than the normal voltage. Please use the correct voltage to check again.
Display E04 or E12	**Incline learning failed:** 1. Check VR wire of incline motor is connected properly. If not, reconnect VR to make it firm. 2. Check AC wire of motor is properly connected, and AC wire of motor is inserted correctly on the control board. 3. Check connection line of motor for damage. If damaged, then have it replaced. If cable is undamaged, then replace the incline motor and press "learning" button of bottom control board to relearn.
Display E06	Inverter MCU problem: The internal microcontroller of the inverter is faulty. Please replace the inverter.
Display E07	**Inverter is too hot:** 1. The temperature of the inverter is too high. Please stop and rest for a period of time and restart. 2. The treadmill is overloaded and the current is too high, causing an increase in the internal temperature of the inverter. Please increase the lubricating oil.

Issue	Solution
Display E08	**The inverter can not receive signal from board.** 1. The communication between the inverter and the display is blocked. Check every connection between the display and the inverter communication cable to ensure that each wire core is fully inserted; Check if the connection wire between the display and the inverter is damaged, and replace the communication connection wire. 2. The communication circuit on the display is abnormal, and the components are damaged. Replace the display. 3. The communication circuit on the inverter is abnormal, and the components are damaged. Replace the inverter.
Display E09 or E10	**Inverter internal signal problem.** 1. The internal components of the inverter are damaged, replace the inverter.
Display E11	**Message failure:** Restart the treadmill. If issue persists, change the inverter.
Display E14	**Inverter Problem:** Check if the wire and inverter wire are connected properly. If not reconnect the motor wire to inverter wire. If the above issue persists, change the inverter.
Display E15 or E16	**Current Sensor U or W Problem:** 1. Check if motor wire and inverter wire are connected properly. If not, reconnect the motor wire to inverter wire. 2. Check if the DC motor has any burning smell. If there is, then the motor needs changing. If the issue persists, change to a new inverter.

XI. WARRANTY

AUSTRALIAN CONSUMER LAW

Many of our products come with a guarantee or warranty from the manufacturer. In addition, they come with guarantees that cannot be excluded under the Australian Consumer Law. You are entitled to a replacement or refund for a major failure and compensation for any other reasonably foreseeable loss or damage.

You are entitled to have the goods repaired or replaced if the goods fail to be of acceptable quality and the failure does not amount to a major failure. Full details of your consumer rights may be found at **www.consumerlaw.gov.au**.

Please visit our website to view our full warranty terms and conditions:
http://www.lifespanfitness.com.au/warranty-repairs

WARRANTY AND SUPPORT

Any claim against this warranty must be made through your original place of purchase.
Proof of purchase is required before a warranty claim may be processed.

If you have purchased this product from the Official Lifespan Fitness website, please visit
https://lifespanfitness.com.au/warranty-form

For support outside of warranty, if you wish to purchase replacement parts or request a repair or service, please visit h**ttps://lifespanfitness.com.au/warranty-form** and fill in our Repair/Service Request Form or Parts Purchase Form.

Scan this QR code with your device to go to **lifespanfitness.com.au/warranty-form**

SECURITY SUPPORT INFORMATION

Reporting

To report a cyber security issue, please email **support@gflgroup.com.au** with product details and a description of the issue. We will acknowledge receipt and provide updates as it is investigated.

Device Support Period

This product will receive security updates for a minimum of 12 months from the date of purchase.

LIFESPAN FITNESS

WWW.LIFESPANFITNESS.COM.AU