# PaceMate Treadmill

## USER MANUAL

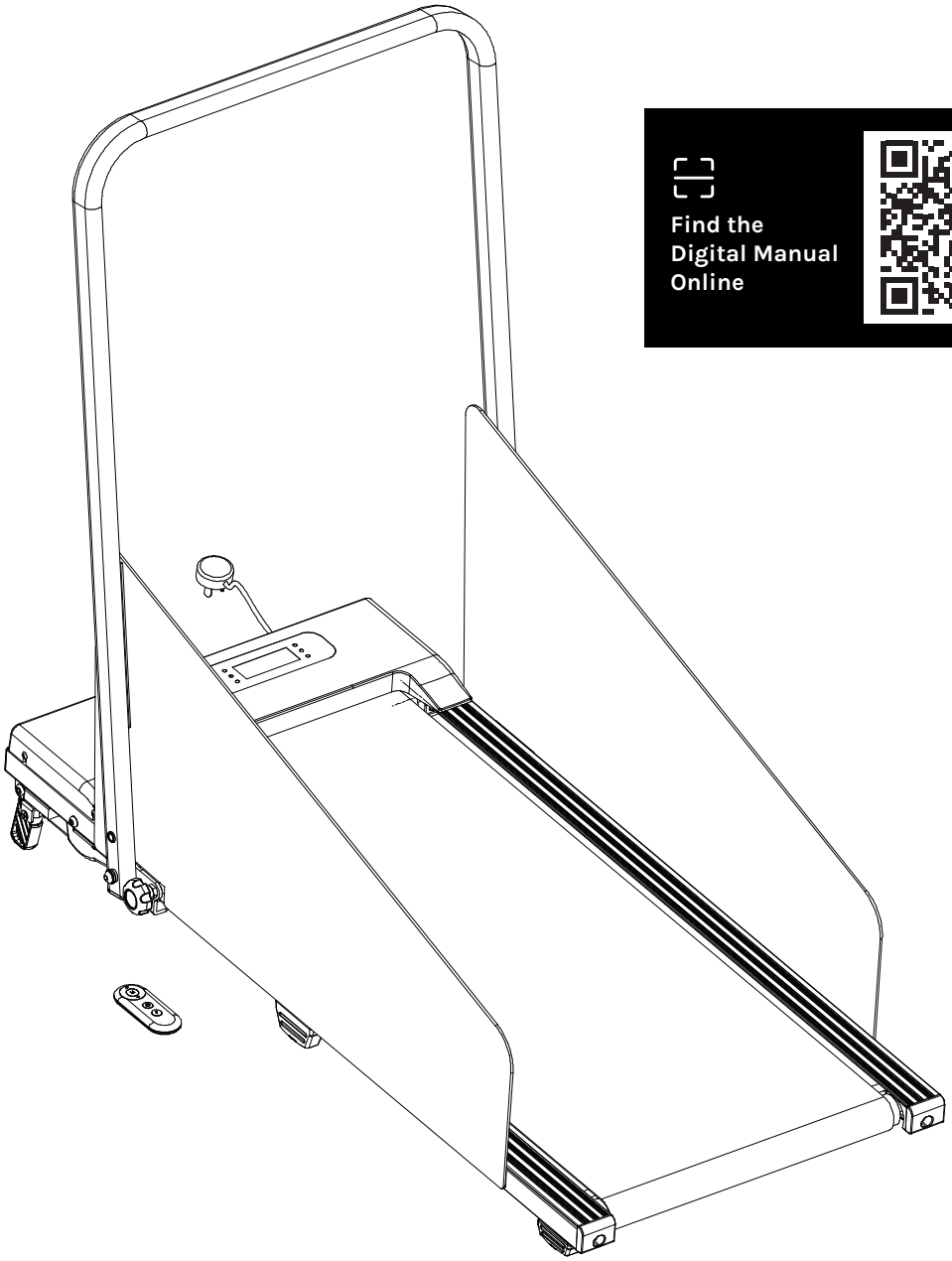

Find the Digital Manual Online

Product may vary slightly from the item pictured due to model upgrades.

**Read all instructions carefully before using this product. Retain this owner's manual for future reference.**

NOTE:
This manual may be subject to updates or changes. Up to date manuals are available through our website at www.lsgfitness.com.au

# TABLE OF CONTENTS


I. Important Safety Instructions ..... 03

II. Parts List ..... 05

III. Control Panel ..... 06

IV. Folding Instructions ..... 07

V. Incline Settings ..... 09

VI. Lubrication ..... 10

VII. Running Belt Adjustment ..... 11

VIII. Care & Maintenance..... 12

IX. Troubleshooting ..... 12

# I. IMPORTANT SAFETY INSTRUCTIONS

## ⚠ WARNING: Read all instructions before using this treadmill.

It is important your treadmill receives regular maintenance to prolong its useful life. Failing to regularly maintain your treadmill may void your warranty.

## ⚠ DANGER

To reduce the risk of electric shock disconnect your treadmill from the electrical outlet prior to cleaning and/or service work.

## DO NOT USE AN EXTENSION CORD:

DO NOT ATTEMPT TO DISABLE THE GROUNDED PLUG BY USING IMPROPER ADAPTERS OR IN ANY WAY MODIFY THE CORD SET.

- The treadmill must be positioned on a firm, flat surface to ensure stability and safety for your dog.
- This treadmill is designed for indoor use only; do not use it outdoors with your dog.
- Do not place the treadmill on thick carpet to allow air circulation underneath.
- Make sure your dog is wearing a properly fitted harness or leash designed for treadmill use to prevent accidents.
- Always ensure your dog's paws are clean and nails are trimmed to prevent slipping or damage to the treadmill.
- Never start the treadmill with your dog already standing on the belt. Have your dog stand on either side of the treadmill and let them walk onto the belt after the motor starts at a low speed. Do not let your dog step onto the belt if the treadmill is running at full speed.
- Do not leave your dog unattended while using the treadmill.
- Always supervise your dog while they use the treadmill to ensure their safety.
- Unplug the treadmill from the power source when your dog is not using it.
- Regularly clean the treadmill after your dog's use. Wipe down the belt and handles, using a mild soap solution. Avoid harsh cleaning agents.

- When the treadmill is not in use for long periods, fold and store it in a clean, dry place.
- If the treadmill's electrical cable or plug is loose or worn, do not let your dog use the treadmill and have it inspected by a qualified electrician.
- The treadmill is not a toy for dogs. Ensure your dog is healthy and comfortable using the treadmill by consulting with your veterinarian before starting a treadmill routine, especially if they have any prior medical conditions.
- Make sure your dog is comfortable and calm on the treadmill, and start with short, slow sessions, gradually increasing the time and speed as they get used to it.

**Unplug the power cord before moving the treadmill.**

## WARNING

**THIS PRODUCT CONTAINS A BUTTON BATTERY THAT IS HAZARDOUS AND IS TO BE KEPT AWAY FROM CHILDREN**

The battery can cause severe or fatal injuries in 2 hours or less if it is swallowed or placed inside any part of the body. Seek medical attention immediately if this occurs.

# II. PARTS LIST

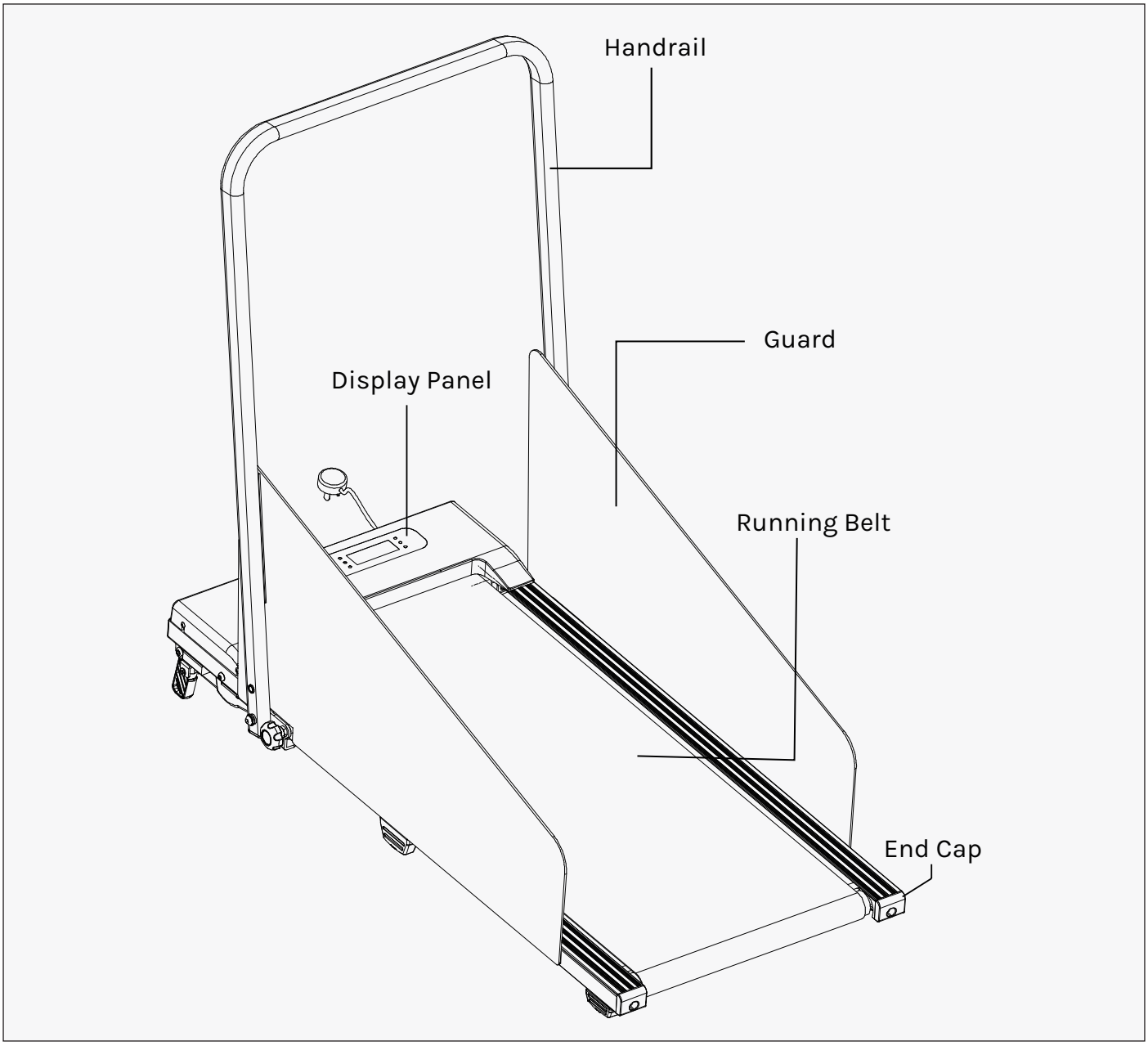


## ACCESSORIES

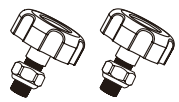

Lock Nut and Nut

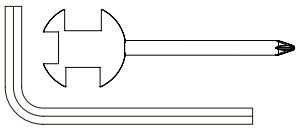

Spanner and Allen Wrench

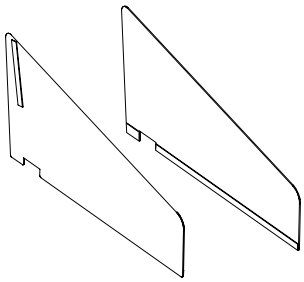

Guardrail

# III. CONTROL PANEL

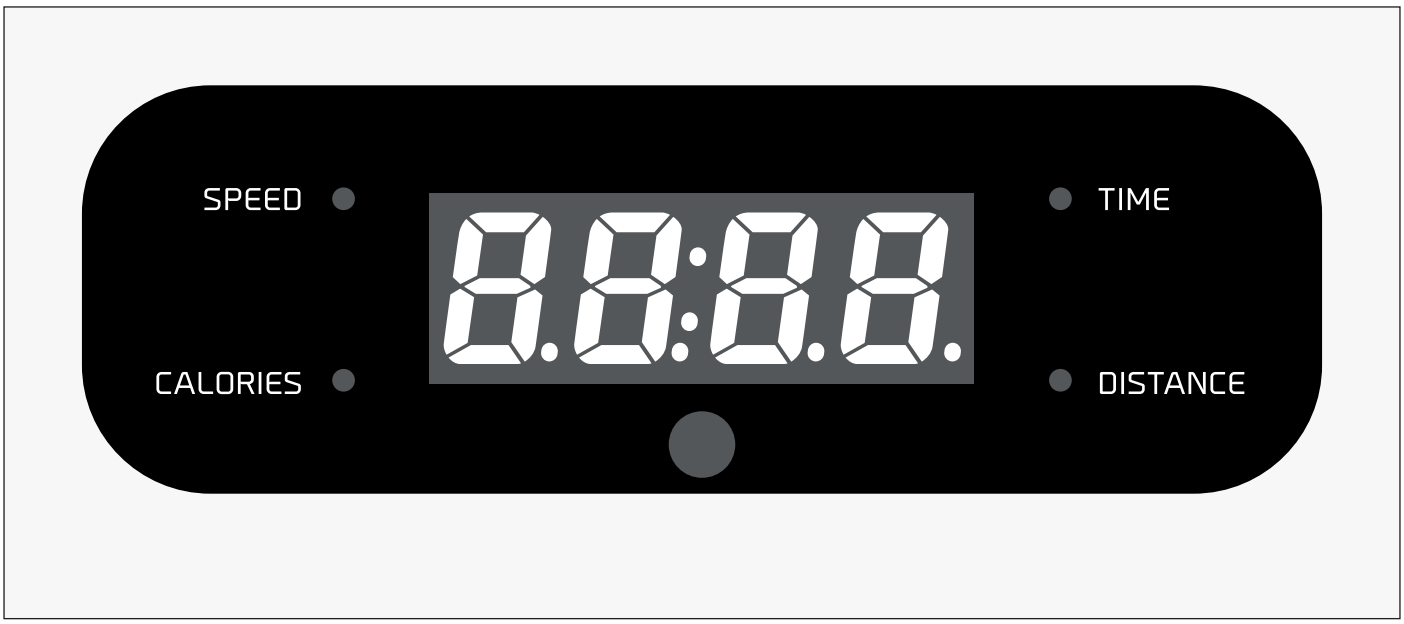


## DISPLAY FUNCTIONS:

**TIME:** Displays your elapsed workout time in minutes and seconds.

**SPEED:** Displays the current speed from the minimum 1.0 KPH to the maximum 8.0 KPH.

**DISTANCE:** Displays the accumulative distance travelled during workout.

**CALORIES:** Displays the total calories burned during your workout.

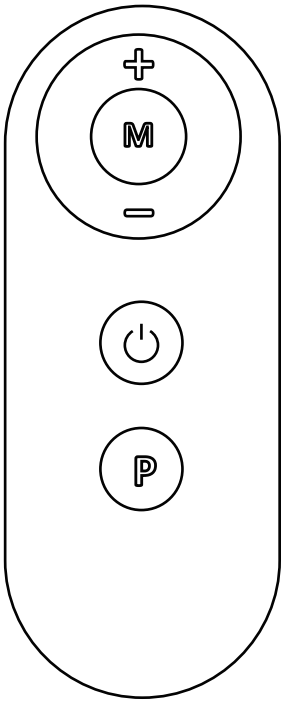


Press the button to start/stop training on different training mode immediately.

Press the button to select the pre-set training program (P01-P06) mode before training.

Press the button to switch the display.

Press the button to make upward adjustments for the speed.

Press the button to make backward adjustments for the speed.

# IV. UNFOLDING/FOLDING INSTRUCTIONS

## 1. Unfolding the machine

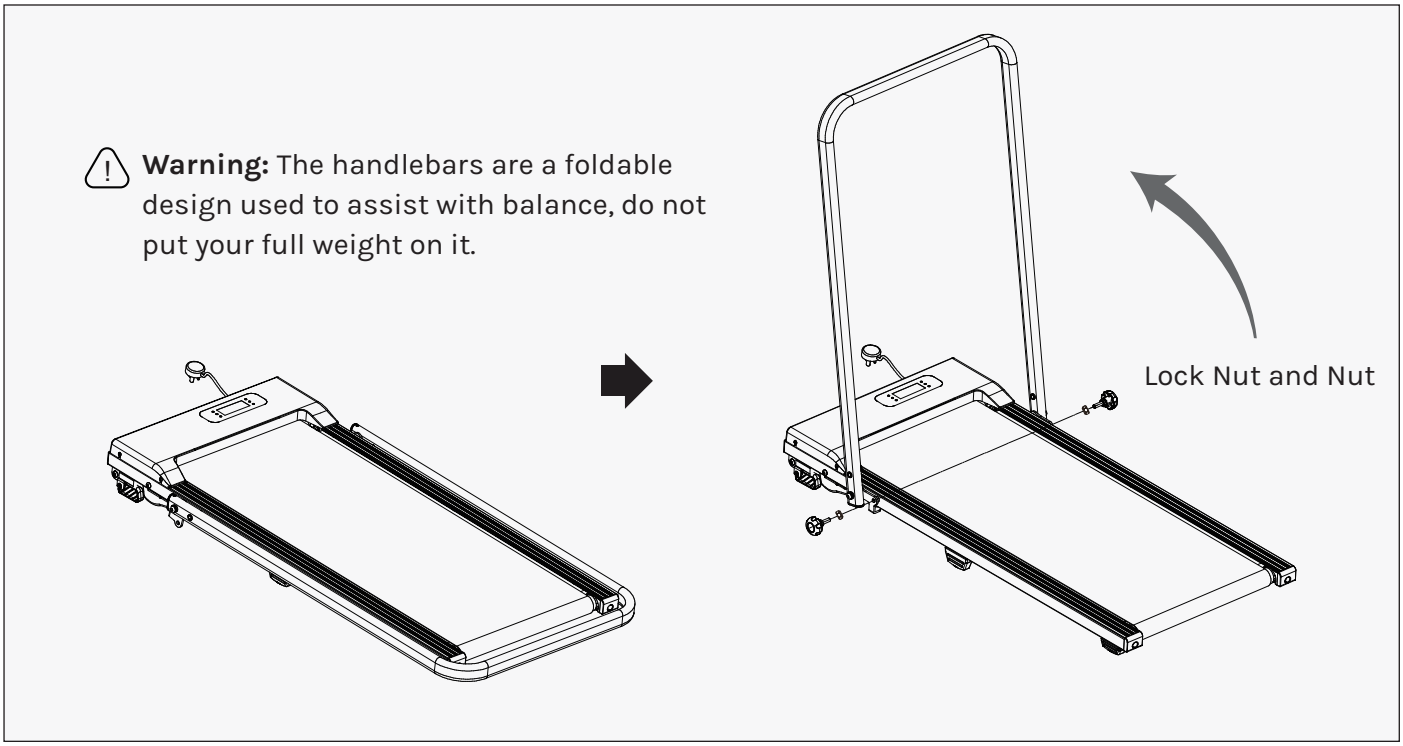


## 2. Folding the machine

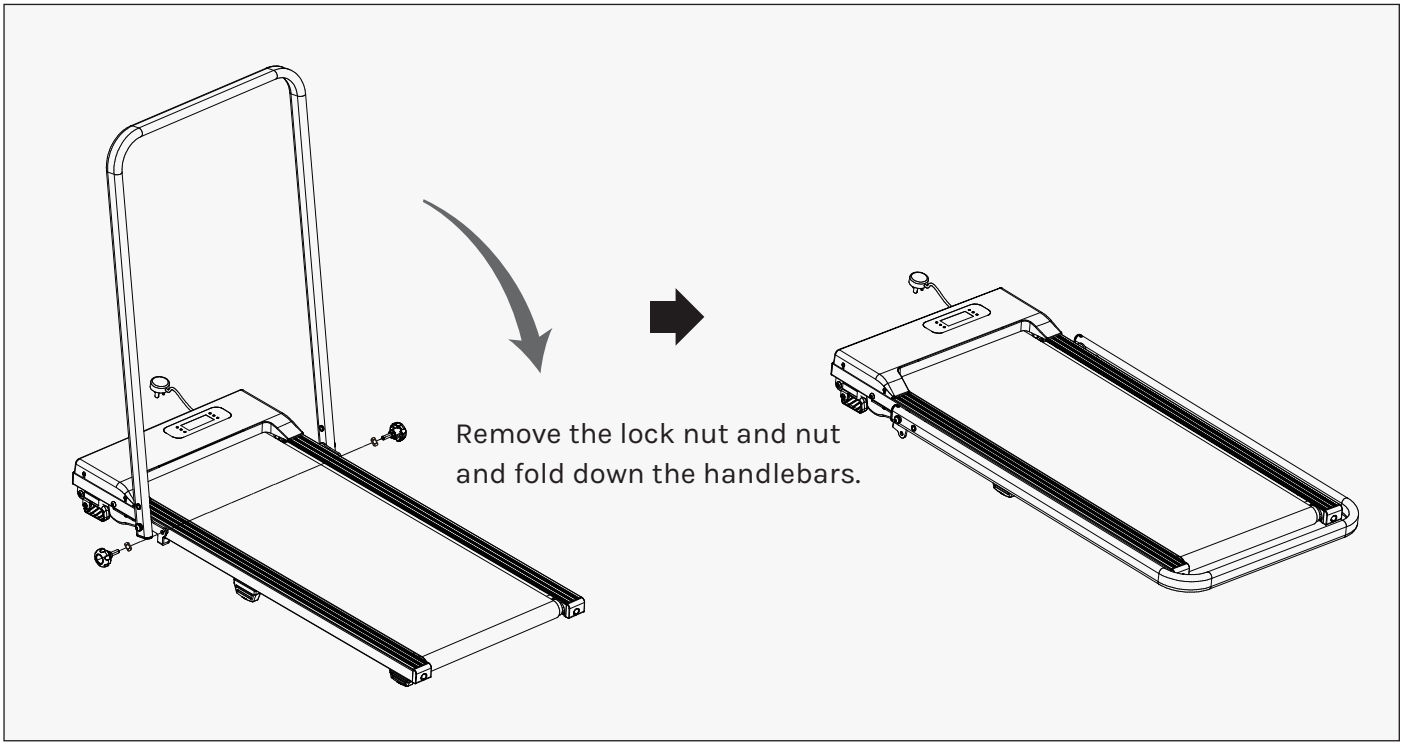

## 3. Installing Guardrail

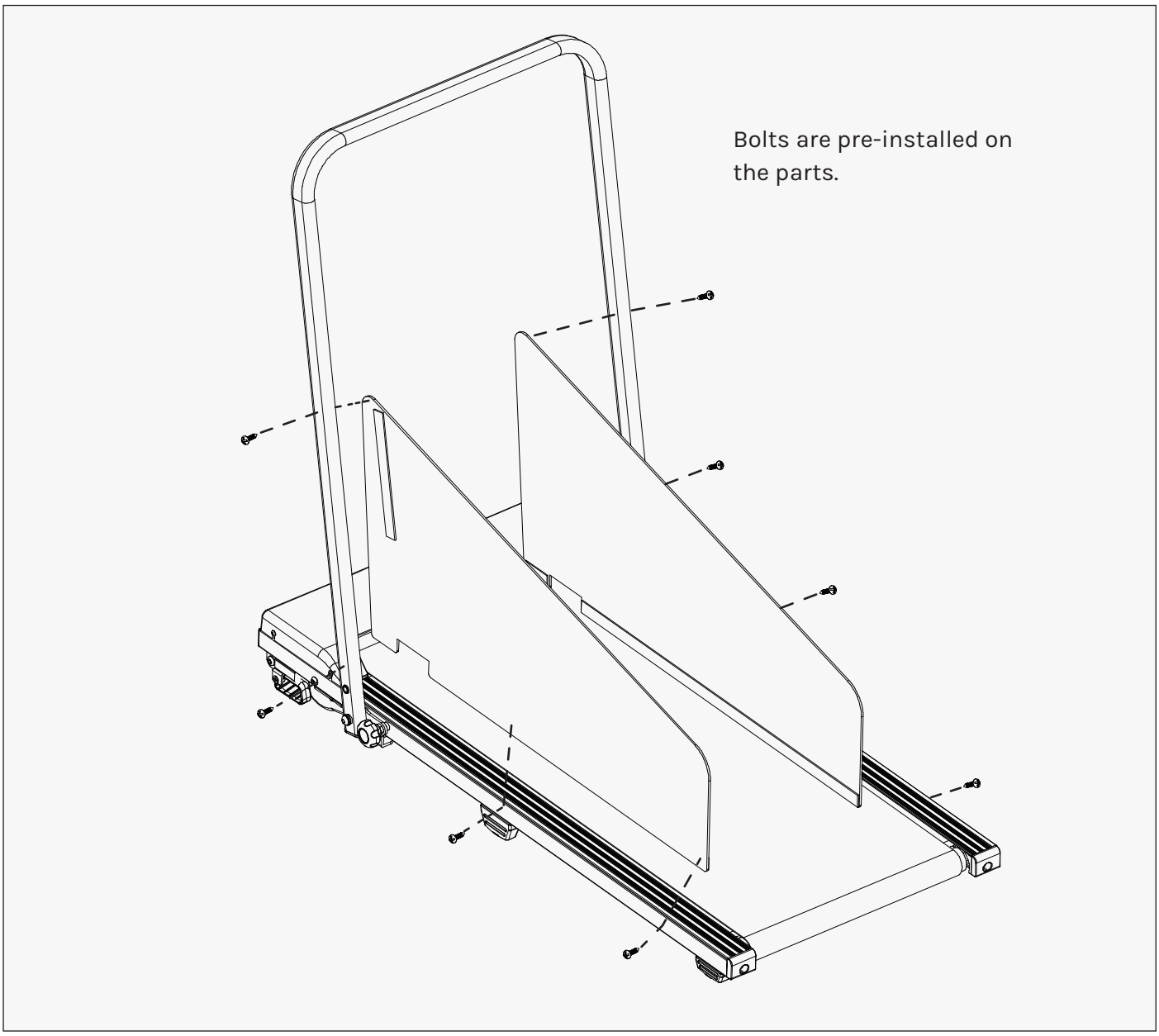


Take the guardrail out of the package and locate the corresponding hole position of the machine. Use a Allen Wrench to secure the hex screws to the machine and tighten them.

# V. INCLINE SETTING

The treadmill allows you to manually adjust the incline at the front of the treadmill. Adjust the incline before starting the machine.

See diagram below.

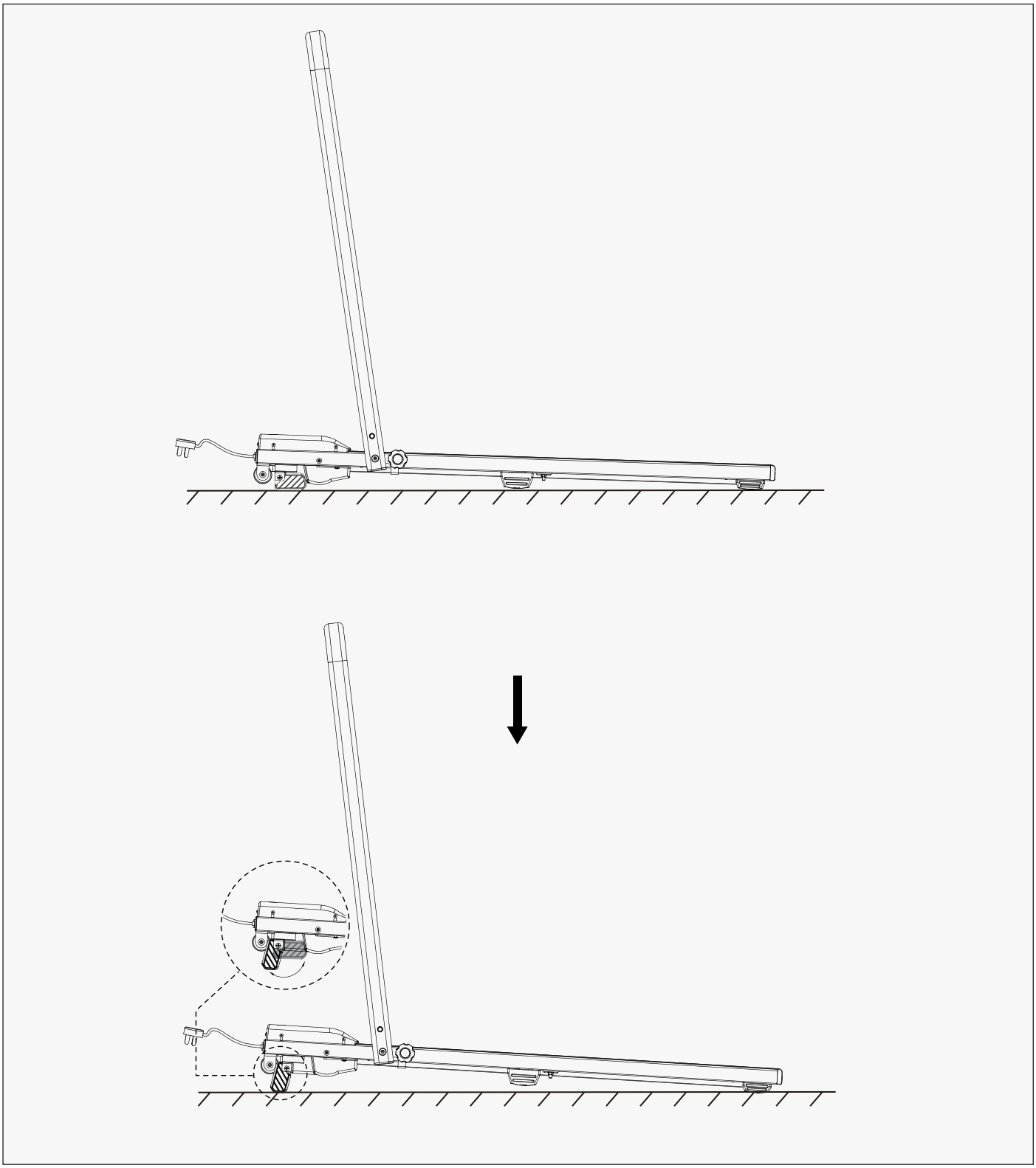

# VI. LUBRICATION

Lubricating under the running belt will ensure superior performance and extend its life expectancy. After the first 25 hours of use (or 2-3 months) apply some lubricant, and repeat for every following 50 hours of use (or 5-8 months).

**How to check running belt for proper lubrication?**
Lift one side of the running belt and feel the top surface of the running deck.
If the surface is slick to the touch, then no further lubrication is required.
If the surface is dry to the touch, apply some lubricant.

**How to apply lubricant?**
Lift one side of running belt.
Pour some lubricant under the centre of the running belt on the top surface of the running deck.

Run on the treadmill at a slow speed for 3 to 5 minutes to evenly distribute lubricant.

**NOTE: DO NOT over lubricate running deck. Any excess lubricant that comes out should be wiped off.**

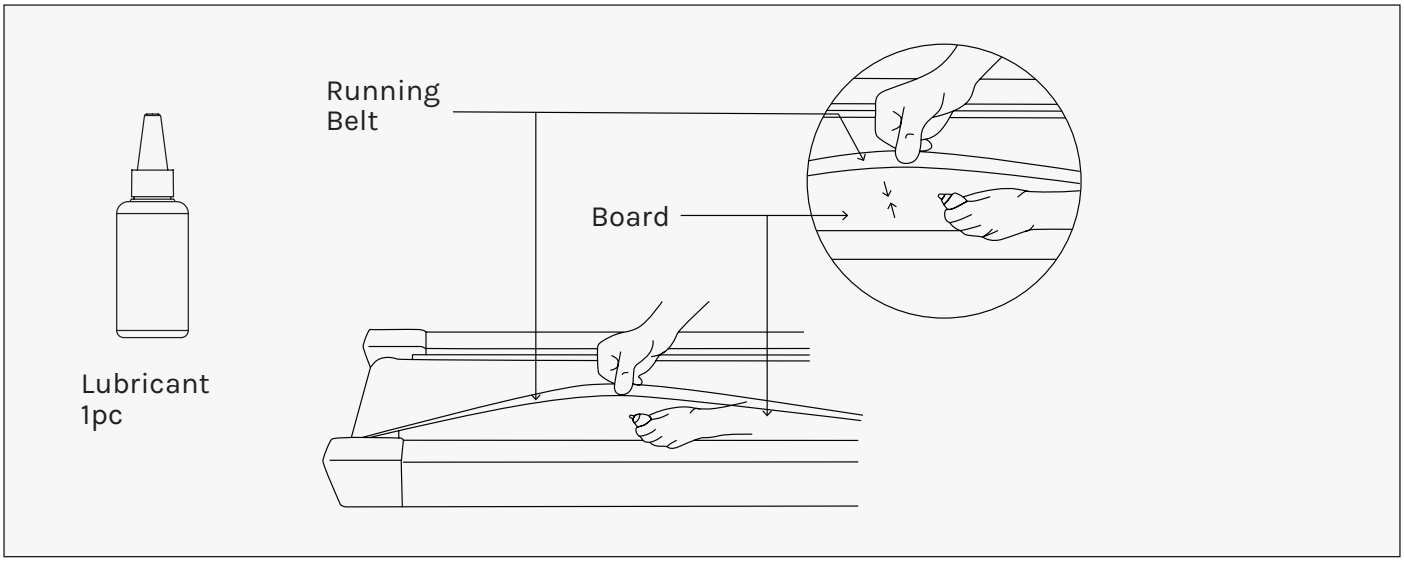

# VII. RUNNING BELT ADJUSTMENT

The running belt is pre-adjusted to the running deck at the factory, but after prolonged use it can stretch and require readjustment. To adjust the belt, turn on the main power switch of the treadmill and let the belt run at a speed of 4.0-6.0 KPH. Use the Allen Wrench provided to turn the rear roller adjustment bolts in order to centre the belt. If the running belt is shifting to the left, turn the left adjustment bolt 1/4 turn clockwise, and the running belt should start to correct itself.

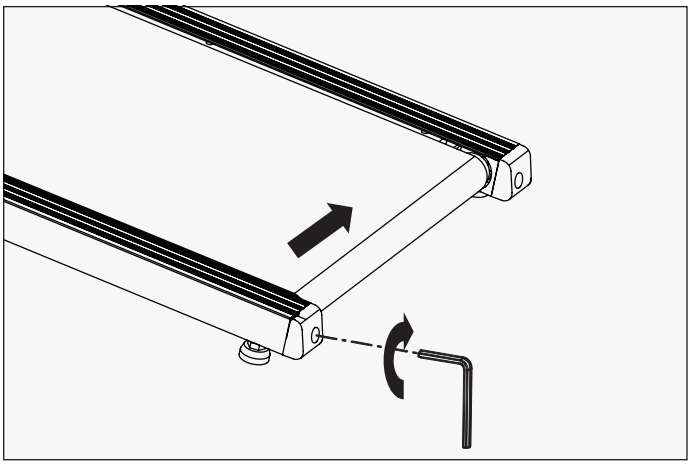

**Tool: Allen Wrench**

If the running belt is shifting to the right, then turn the right adjustment bolt 1/4 turn clockwise, and the belt should start to correct itself. Keep turning the adjustment bolts until the running belt is properly centered.

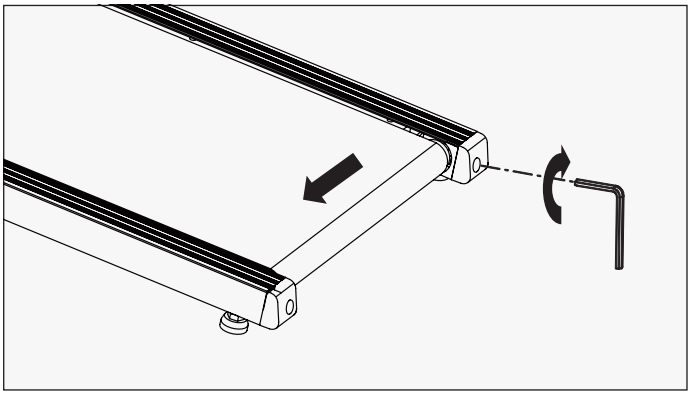

**Tool: Allen Wrench**

If the running belt is slipping during use, turn off and unplug the treadmill. Using the Allen Wrench provided, turn both left and right rear roller adjustment bolts 1/4 turn clockwise, then turn the main power switch back on and run the treadmill at a speed of 4.0-6.0 KPH. Run on to the running belt to determine if the belt is still slipping. Repeat this procedure until the belt no longer slips.

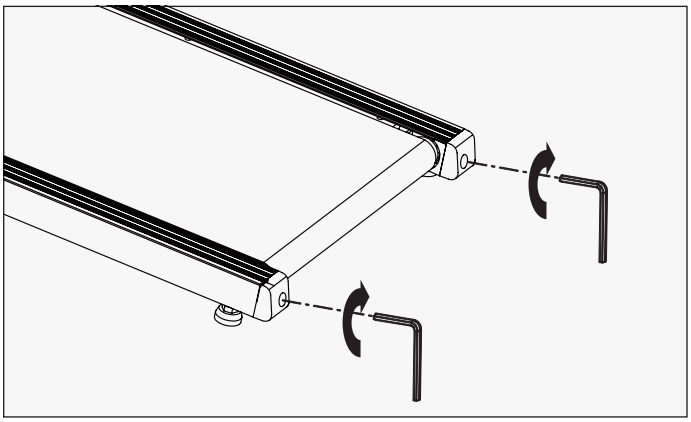

**Tool: Allen Wrench**

# VIII. CARE & MAINTENANCE

**WARNING:** To prevent electrical shock, please turn off and unplug the treadmill before cleaning or performing routine maintenance.

**WARNING:** Always check the wear and tear components like spring knob and running belt to prevent injury.

**CLEANING**

**After each exercise, ensure that the unit is wiped down and any sweat is removed from the unit.**

The treadmill can be cleaned with a soft cloth and mild detergent. Do not use abrasives or solvents. Be careful not to get excessive moisture on the display panel as this might damage the unit and create an electrical hazard.

Please keep the treadmill, especially the computer console, out of direct sunlight to prevent damage to the screen.

**STORAGE**

Store the treadmill in a clean and dry indoor environment. Never leave or use the unit outdoors. Ensure the master power switch is off and the power cord is un-plugged from wall outlet.

# IX. TROUBLESHOOTING GUIDE

| Problem | Potential Causes | Corrections |
|---|---|---|
| Treadmill will not start. | 1. Treadmill not plugged in.<br>2. Circuit breaker in the house has been tripped.<br>3. Treadmill circuit breaker has been tripped. | 1. Plug the power cord into a wall outlet.<br>2. Reset the circuit breaker, or call an electrician to replace the circuit breaker.<br>3. Wait 5 minutes and then try to restart the treadmill. |
| Belt slips. | Belt not tight enough. | Adjust belt tension. |
| Belt hesitates when stepped on. | 1. Not enough lubrication applied onto the running deck.<br>2. Belt is too tight. | 1. Apply lubricant.<br>2. Adjust belt tension. |
| Belt is not centred. | Running belt tension not even across the rear roller. | Centre the belt. |

LSG

WWW.LSGFITNESS.COM.AU