Stride M3 Treadmill

USER MANUAL

Product may vary slightly from the item pictured due to model upgrades.

Read all instructions carefully before using this product.
Retain this owner's manual for future reference.

NOTE:
This manual may be subject to updates or changes. Up to date manuals are available through our website at www.lsgfitness.com.au

TABLE OF CONTENTS

I. Important Safety Instructions 03

II. Important Electrical Information 05

III. Important Operating Instructions 06

IV. Parts List 07

V. Assembly Instructions 08

VI. Folding Instructions 10

VII. Operation Guide 11

VIII. Maintenance Instructions 15

IX. Exercise Guide 18

X. Troubleshooting 20

XI. Warranty 20

XII. Hand Pulse Technology 21

I. IMPORTANT SAFETY INSTRUCTIONS

⚠ WARNING: Read all instructions before using this treadmill.

It is important your treadmill receives regular maintenance to prolong its useful life. Failing to regularly maintain your treadmill may void your warranty.

⚠ DANGER

To reduce the risk of electric shock disconnect your treadmill from the electrical outlet prior to cleaning and/or service work.

DO NOT USE AN EXTENSION CORD:

DO NOT ATTEMPT TO DISABLE THE GROUNDED PLUG BY USING IMPROPER ADAPTERS OR IN ANY WAY MODIFY THE CORD SET.

- Install the treadmill on a flat level surface with access to a 220-240 volt (50/60Hz), grounded outlet.
- Do not operate treadmill on deeply padded, plush or shag carpet. Damage to both carpet and treadmill may result.
- Do not block the rear of the treadmill. Provide a minimum of 1 metre clearance between the rear of the treadmill and any fixed object.
- Place your unit on a solid, level surface when in use.
- When running, make sure the plastic clip is fastened on your clothing. It is for your safety, should you fall or move too far back on the treadmill.
- Keep hands away from all moving parts.
- Never operate the treadmill if it has a damaged power cord or plug. When damaged, these must be replaced by the manufacturer, its service agent or similarly qualified persons in order to avoid a hazard.
- Keep the cord away from heated surfaces.
- Do not operate where aerosol spray products are being used or where oxygen is being administered. Sparks from the motor may ignite a highly gaseous environment.
- Never drop or insert any object into any openings.

- The treadmill is intended for in-home use only and is not suitable for commercial environments.
- To disconnect, turn all controls to the off position, remove the safety key, and then remove the plug from the outlet.
- The pulse sensors are not medical devices. Various factors, including the user's movement, may affect the accuracy of heart rate readings. The pulse sensors are intended only as exercise aids in determining heart rate trends in general.
- Use the handrails provided; they are for your safety.
- Wear proper shoes. High heels, dress shoes, sandals or bare feet are not suitable for use on your treadmill. Quality athletic shoes are recommended to avoid leg fatigue.
- Before undertaking any type of exercise program, it is recommended that you consult a doctor.
- Injuries to health may result from incorrect or excessive training.
- This appliance is not intended for use by persons (including children) with reduced physical, sensory or mental capabilities, or lack of experience and knowledge, unless they have been given supervision or instruction concerning use of the appliance by a person responsible for their safety.
- **WARNING:** Heart rate monitoring systems may be inaccurate. If you feel faint stop exercising immediately.
- Children should not be allowed on or around the equipment, even when not in use.
- Children should be supervised to ensure that they do not play with this machine.
- Loose-fitting clothing or jewellery that could become an entanglement hazard should not be worn.
- Training shoes should be worn when using the equipment.
- Equipment must be used on a level and stable surface.
- All fixings should be checked before the equipment is used.
- All literature relating to the use of the equipment should be retained for future reference.
- Recommended operating temperature: 5-40°C.

! Remove the safety key after use to prevent unauthorized treadmill operation.

II. IMPORTANT ELECTRICAL INFORMATION

⚠ WARNING!

- Route the power cord away from any moving part of the treadmill including the elevation mechanism and transport wheels.
- **NEVER** remove any cover without first disconnecting AC power.
- **NEVER** expose this treadmill to rain or moisture. This treadmill is not designed for use outdoors, near a pool, or in any other high humidity environment.
- This is a high-power item; please do not share the same outlet with other high-power machines such as, fridges, air conditioning etc. Please choose an outlet exclusively for the machine and make sure the fuse is 10A.

III. IMPORTANT OPERATING INSTRUCTIONS

- Understand that changes in speed and incline do not occur immediately. Set your desired speed on the computer console and release the adjustment key. The computer will obey the command gradually.

- Use caution while participating in other activities while walking on your treadmill, such as watching television, reading, etc. These distractions may cause you to lose balance or stray from walking in the centre of the belt; which may result in serious injury.

- This unit starts with at a very low speed. It is recommended to stand on the side rails and only step on the treadmill as it is moving on a slow speed. This will prolong the life of your motor and run the belt smoothly.

- In order to prevent losing balance and suffering unexpected injury, never mount or dismount the treadmill while the belt is moving at high speeds.

- Always hold on to handrail while making control changes.

- A safety key is provided with this machine. Remove the safety key will stop the walking belt immediately; the treadmill will shut off automatically. Inserting the safety key will reset the display.

- Do not use excessive pressure on console control keys. They are precision set to function properly with little finger pressure.

- Replace any defective components immediately. The machine must be kept out of use until repaired.

- Belt wear-in period: all treadmills make a certain type of thumping noise due to the belt riding over the rollers, especially new treadmills. This noise will diminish over time, although may not completely go away. The belt will stretch over time, causing it to ride smoother over the rollers.

IV. PARTS LIST

S1

M5x10
Hex Bolt x 2

S2

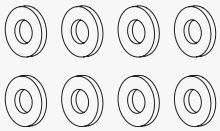

Flat Gasket x 8

S3

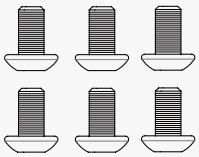

M8x16
Hex Bolt x 6

S4

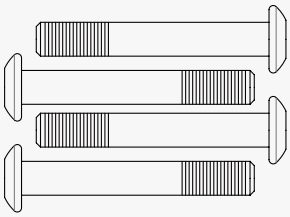

M8x60
Hex Bolt x 4

S5

Curved Gasket x 2

TOOL KIT

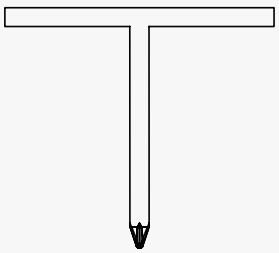

Allen Key x 1

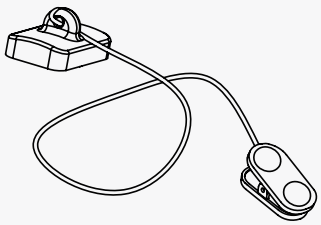

Safety Key x 1

V. ASSEMBLY INSTRUCTIONS

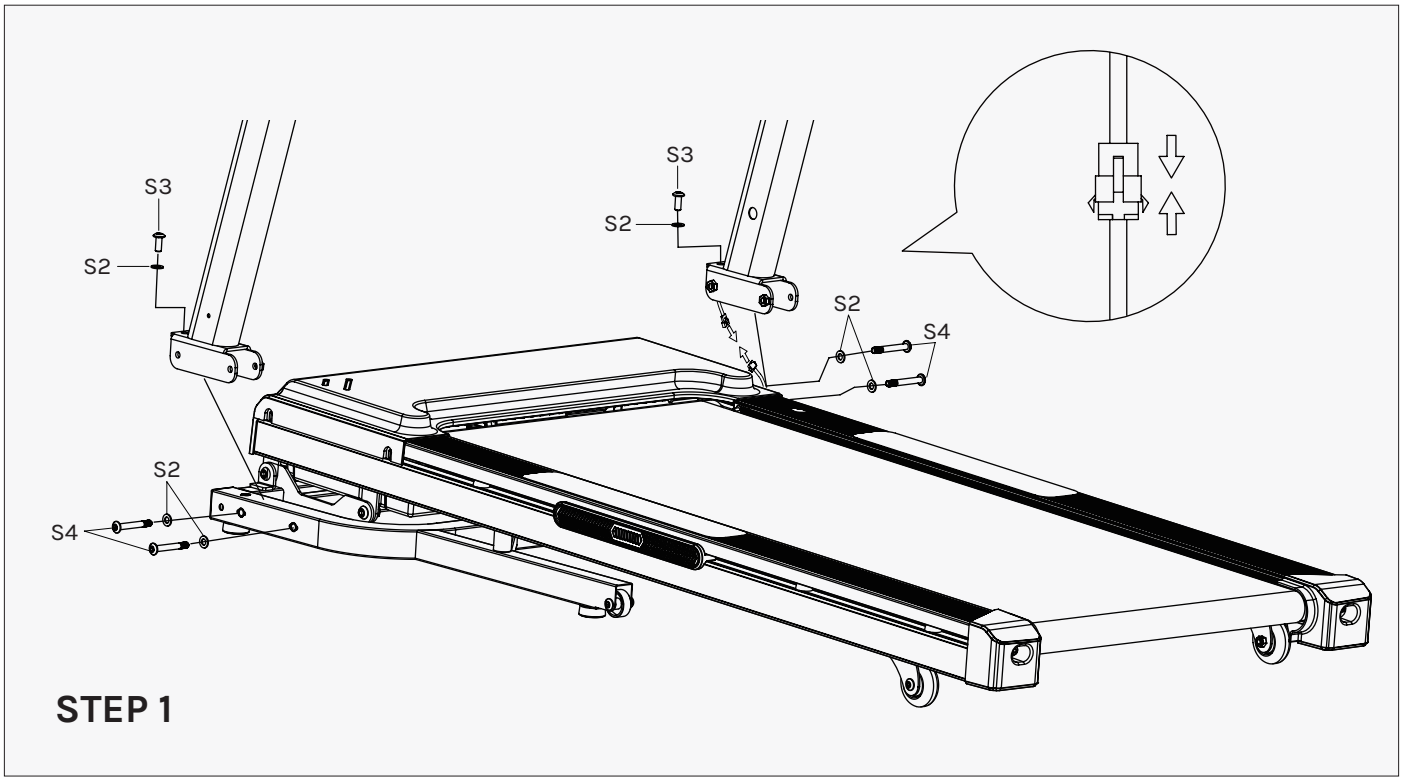

First, connect the Signal Wire from the computer to the Signal Wire from the upright frame.

Next, secure the upright frame into the stabilizer with M8x16 Hex Bolt (S3), Flat Gasket (S2) and M8x60 Hex Bolt (S4), as pictured.

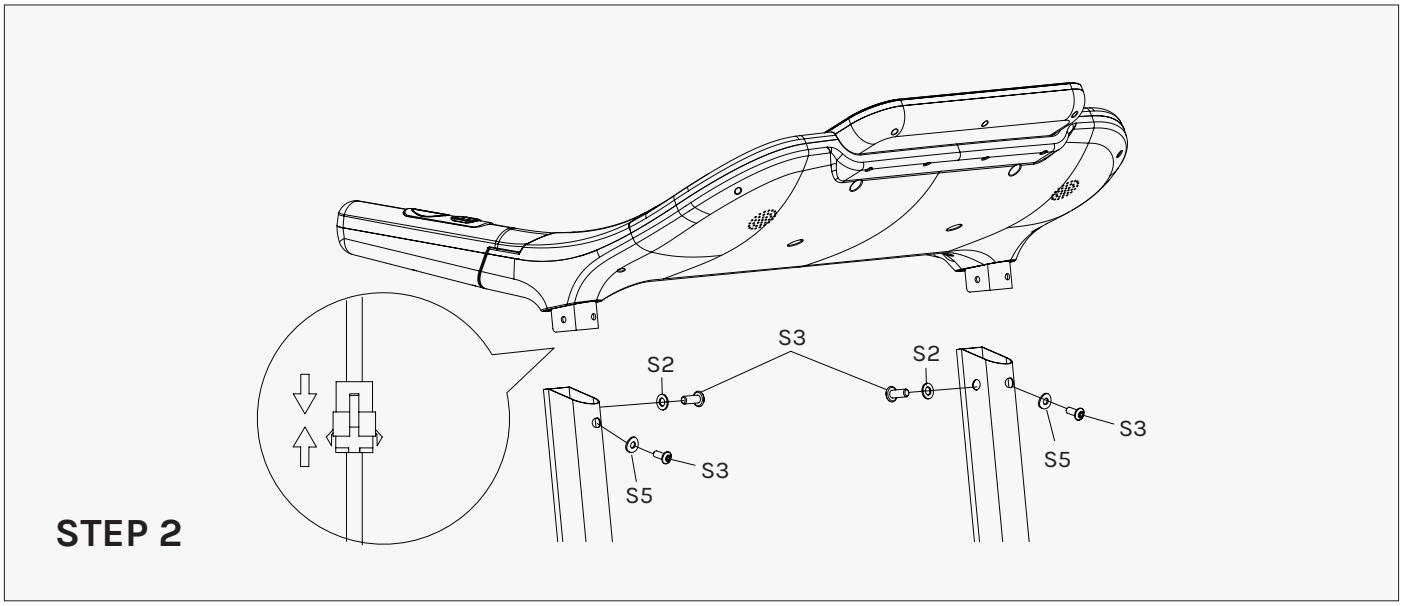

First, connect the Signal Wire from the computer to the Signal Wire from the upright frame.

Next, secure the computer into the upright frame with M8x16 Hex Bolt (S3), Flat Gasket (S2), and Curved Gasket (S5), as pictured. Tighten the bolts with the Allen Key provided.

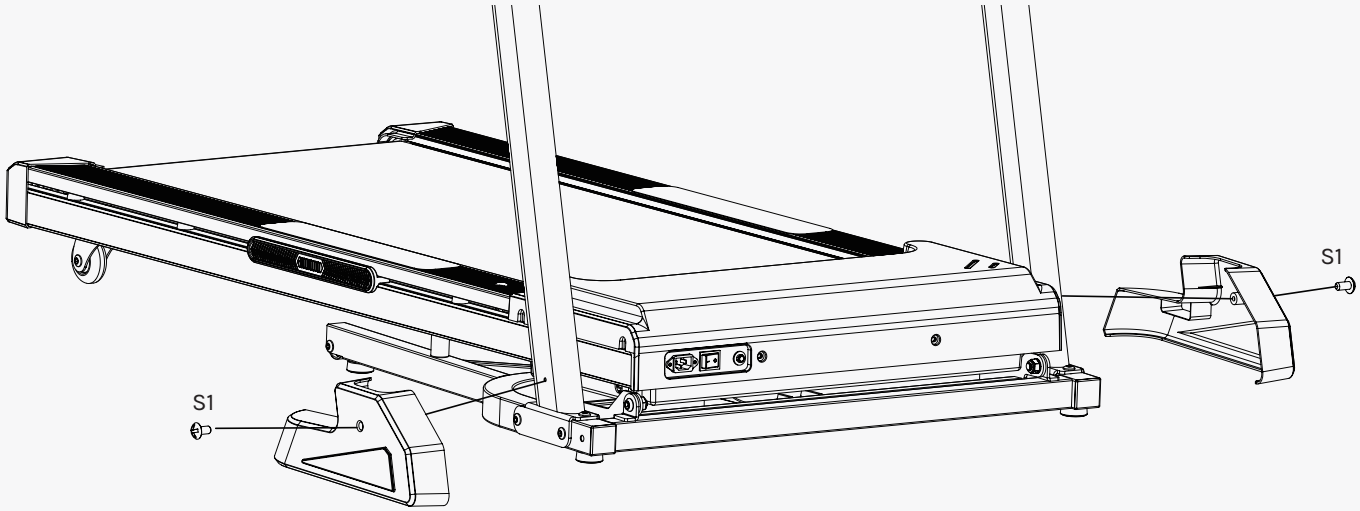

STEP 3

Secure the cover to the upright frame with one Hex Bolt (S1) both sides, tighten the bolts with Multi Hex Tool with Allen Key provided.

VI. FOLDING INSTRUCTIONS

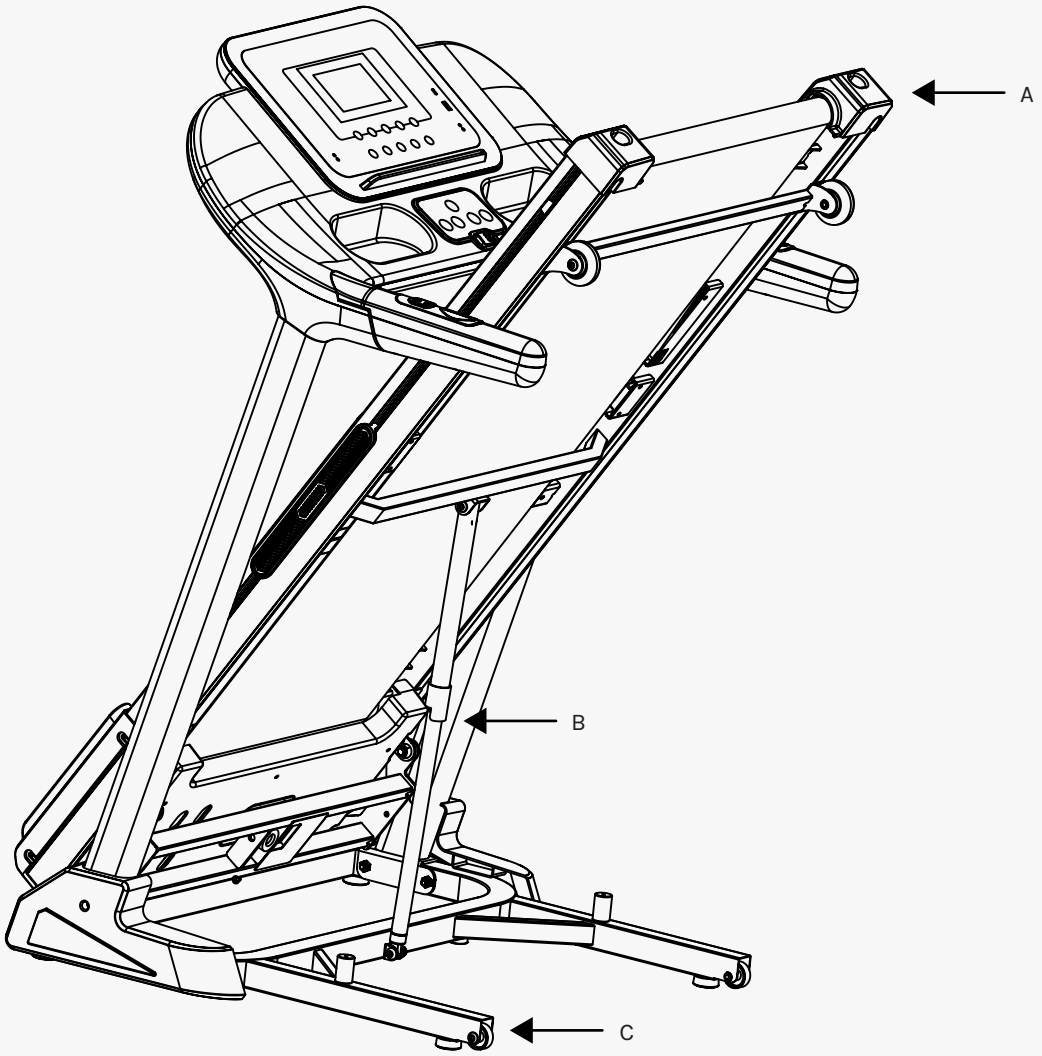

FOLDING & UNFOLDING TREADMILL

Fold: Lift the deck up from point A until it clicks for the hydraulics.
Unfold: Press onto point B with your foot until it unlocks the hydraulics. The deck will then slowly lower.

TRANSPORTING

To move the treadmill, first you must put this in the folded position and unplug the power cable.
Then while holding the handlebar and position A with your hands, put your left feet to position C and push the treadmill onto the transportation wheels. With the wheels now touching the ground, you can move it where you like.

VII. OPERATION GUIDE

A. OVERVIEW

NOTE: Always stand on the side rails when you start the treadmill, never start the treadmill while you are standing on the running belt.

QUICK START:
Press the START button on the computer to begin exercising. The running belt starts moving with an initial speed of 1.0 KPH. You may press the SPEED + or SPEED - button on the computer console to increase or decrease the running speed during exercise.

During workout, you may press the STOP button on the computer console to end your workout at any time.

FUNCTION BUTTONS:

START: Press the START button to begin exercising.

STOP: Press the STOP button to end your workout.

MODE: To select different function (TIME, DISTANCE, or CALORIES) for setting exercise goals in manual program mode before training.

PROG (PROGRAM): To select your chosen workout (P1 to P16).

SPEED +: To adjust the function value up. To increase running speed adjustments during all training periods on different training modes.

SPEED -: To adjust the function value down. To decrease running speed adjustments during all training periods on different training modes.

INSTANT SPEED (4 / 8 / 12 / 16): Used to reach desired speed more quickly.

INCLINE ▲: To increase incline level adjustments during all training periods on different training modes.

INCLINE ▼: To decrease incline level adjustments during all training periods on different training modes.

INSTANT INCLINE (3 / 6 / 9 / 12): Used to reach desired incline level more quickly.

DISPLAY BUTTONS:

TIME: Displays your elapsed workout time in minutes and seconds. Press the START button on the computer to begin exercising, you may press the SPEED + or SPEED - button on the computer console or handlebar to increase or decrease the running speed during exercise. Time starts counting up from 0:00 to 99:59 per 1 second increment.

SPEED: Displays the current speed from the minimum 1.0 KPH to the maximum 20.0 KPH.

DIST. (DISTANCE): Displays the accumulative distance travelled during workout. Press the START button on the computer to begin exercising, you may press the SPEED + or SPEED - button on the computer console or handlebar to increase or decrease the running speed during exercise. Distance starts counting up.

CAL. (CALORIES): Displays the total calories burned during your workout. Press the START button on the computer to begin exercising, you may press the SPEED + or SPEED - button on the computer console or handlebar to increase or decrease the running speed during exercise. Calorie starts counting up. (This data is a rough guide for comparison of different exercise sessions and should not be used in medical treatment).

PULSE: Displays your current heart rate in beats per minute. To activate, grab the hand pulse sensors on both handrails during the workout and the heart rate will be displayed after 4-5 seconds. For a more accurate reading, hold the heart rate sensors with both hands.

NOTE: This is not a medical device and only provides an estimate.

INCLINE: Displays the incline level from the minimum 0-level to the maximum 15-level. You may increase or decrease the incline level by pressing the INCLINE ▲ or INCLINE ▼ button on the computer console.

TRAINING IN MANUAL PROGRAM MODE

You may pre-set target TIME or DISTANCE in STOP mode before training. Only one of the functions can be pre-set. To set TIME press the MODE button on the computer console until you see the split window of TIME begin blinking. Press the SPEED + or SPEED - button on the computer console or handlebar to change the setting. Each increment is 1 minute. The pre-set target time range is from 5:00 to 99:00 minutes. Once you pre-set target time, press the START button on the computer to begin exercising. The running belt starts moving with an initial speed of 1.0 KPH. You may press the SPEED + or SPEED - button on the computer console or handlebar to increase or decrease the running speed during exercise.

To set DISTANCE press the MODE button on the computer console until you see the split window of DISTANCE begin blinking. Press the SPEED + or SPEED - button on the computer console to change the setting. The pre-set target distance range is from 0.50 to 65.0 kilometers, the default distance is 1 kilometer. Once you pre-set target distance, press the START button on the computer to begin exercising.

TRAINING IN PRE-SET PROGRAM MODE (P01-P16)

The computer offers 16 pre-set programs (P01-P16). You may select one of the pre-set training programs in STOP mode before training. Press the PROG (PROGRAM) button on the computer console to select one of the training programs. The split window of TIME begin blinking. You may press the SPEED + or SPEED - button on the computer console or handlebar to change the setting. Each increment is 1 minute. The pre-set target time range is from 5:00 to 99:00 minutes. Once you pre-set target time, press the START button on the computer to begin exercising.When the pre-set training program time count down to 0:00, the computer will beep to alert you and the treadmill will stop automatically.

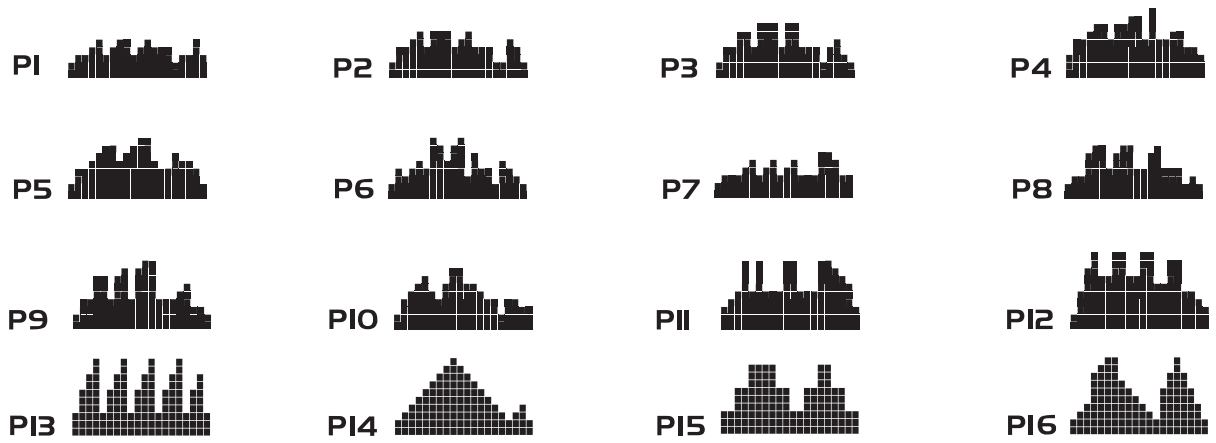

EMERGENCY STOP

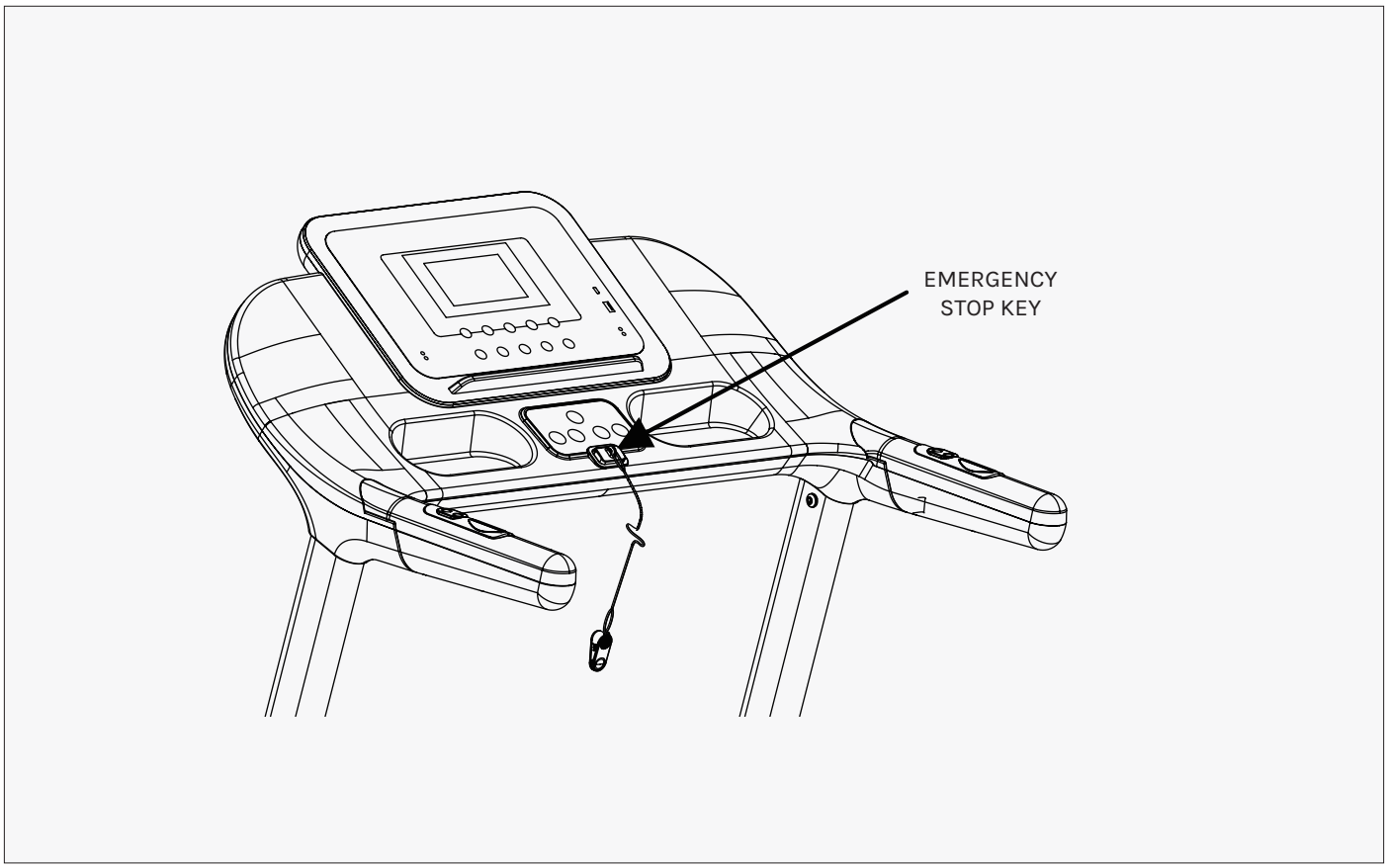

Before beginning a workout session ensure that the **EMERGENCY STOP KEY** is placed onto the Computer Console and the Safety Clip is securely attached to an article of your clothing. If you fall the clip will pull out the **EMERGENCY STOP KEY** from the Computer Console and the running belt will stop immediately for emergency stop, helping to prevent injury.

VIII. MAINTENANCE INSTRUCTIONS

Reasonable cleaning/lubricating should be made to extend the lifetime of this unit. Performance is maximized when the belt and mat are kept as clean as possible.

⚠ WARNING:

- The mat/deck friction may lay a major role in the function and life of your treadmill and that is why we recommend you constantly lubricate this friction point to prolong the useful life of your treadmill. Failing to do this may void your warranty.
- Unplug power cord before maintenance.
- Stop treadmill before folding.

---

1. GENERAL CLEANING

- Use a soft, damp cloth to wipe the edge of the belt and the area between the belt edge and frame. A mild soap and water solution along with a nylon scrub brush will clean the top of the textured belt. This task should be done once a month. Allow to dry before using.
- On a monthly basis, vacuum underneath your treadmill to prevent dust build up. Once a year, you should remove the black motor shield and vacuum out dirt that may accumulate.

2. GENERAL CARE

- Check parts for wear before use.
- Pay particular attention to the fixing knobs and make sure they are tight.
- Always replace the mat if worn and any other defective parts.
- If in doubt do not use the treadmill and contact us.

! **Take care to protect carpets and floor** in case of leakages. This product is a machine that contains moving parts which have been greased/lubricated and could leak.

3. BELT/DECK/ROLLER LUBRICATION

The mat/deck friction may play a major role in the function and life of your treadmill and that is why we recommend you constantly lubricate this friction point to prolong the useful life of your treadmill. You should apply lubrication after approximately the first 25 hours of operation.

We recommend lubrication of the deck according to the following timetable:

- Light use (less than 3 hours per week) every 6 months.
- Medium use (3-5 hours a week) every 3 months.
- Heavy use (more than 5 hours per week) every 6-8 weeks.

See below procedures for lubricating:

1. Use a soft, dry cloth to wipe the area between the belt and deck.
2. Spread lubricant onto the inside surface of belt and deck evenly (make sure the machine is turned off and power is disconnected).
3. Periodically lubricate the front and rear rollers to keep them at their peak performance. If the treadmill belt/deck/roller is kept reasonably clean it is possible to expect over 1200 hours before relubricating is necessary.

NOTE: DO NOT over lubricate running deck. Any excess lubricant that comes out should be wiped off.

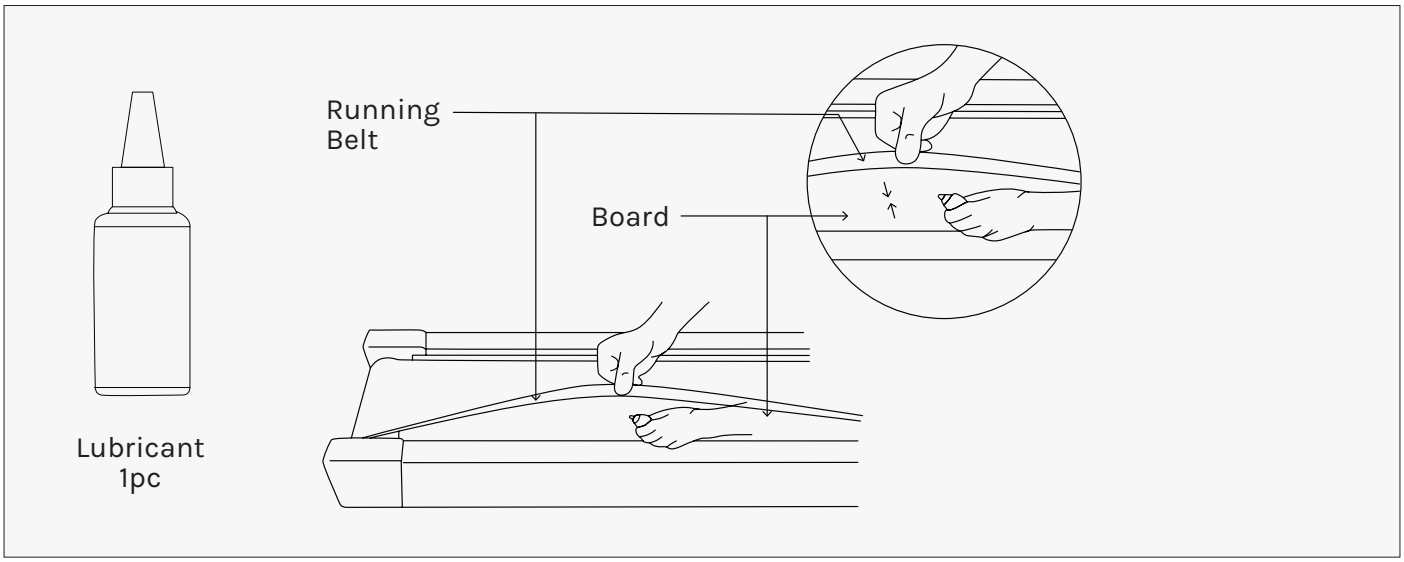

4. HOW TO CHECK THE RUNNING MAT FOR PROPER LUBRICATION

1. Disconnect the main power supply.
2. Fold the treadmill up into the storage position.
3. Feel the underside surface of the running mat.

If the surface is slick when touched, then no further lubrication is needed.
If the surface is dry to the touch, apply a suitable silicone lubricant.

We recommend that you use a silicone based spray to lubricate your treadmill. This can be purchased directly from us or any hardware store.

Video Tutorial Available at: **http://youtu.be/cP9NtFHfWlc**
Lifespan Fitness YouTube Channel: **http://www.youtube.com/user/treadmillsvideos**

5. ADJUSTING THE RUNNING BELT

The running belt is pre-adjusted to the running deck at the factory, but after prolonged use it can stretch and require readjustment.
To adjust the belt, turn on the main power switch of the treadmill and let the belt run at a speed of 6-8 KPH. Use the Allen Wrench provided to turn the rear roller adjustment bolts in order to centre the belt. If the running belt is shifting to the left, turn the left adjustment bolt 1/4 turn clockwise, and the running belt should start to correct itself.

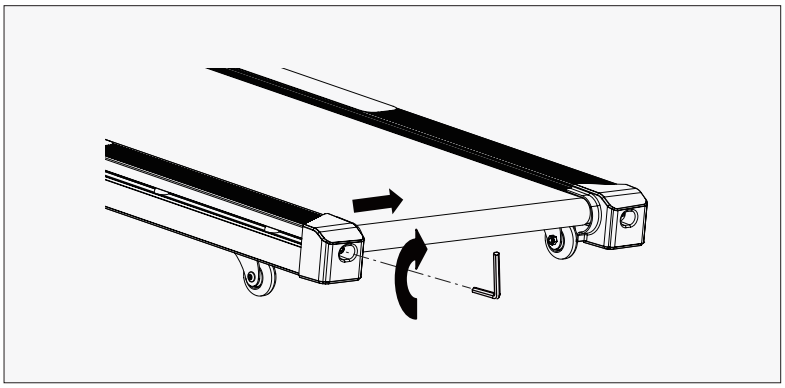

Tool:

Allen Wrench

If the running belt is shifting to the right, then turn the right adjustment bolt 1/4 turn clockwise, and the belt should start to correct itself. Keep turning the adjustment bolts until the running belt is properly centered.

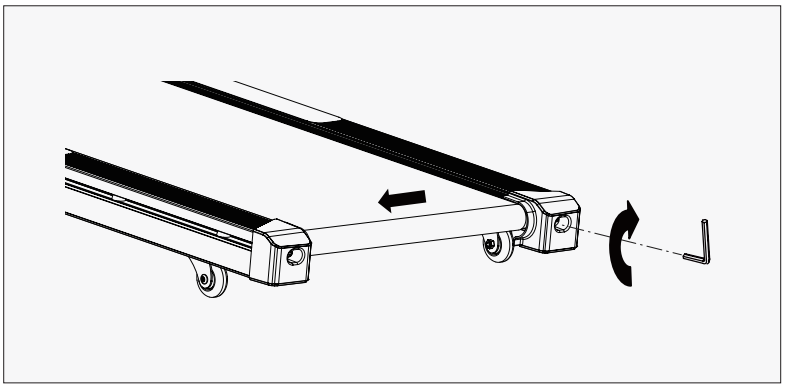

Tool:

Allen Wrench

If the running belt is slipping during use, turn off and unplug the treadmill. Using the Allen Wrench provided, turn both left and right rear roller adjustment bolts 1/4 turn clockwise, then turn the main power switch back on and run the treadmill at a speed of 6-8 KPH. Run on to the running belt to determine if the belt is still slipping. Repeat this procedure until the belt no longer slips.

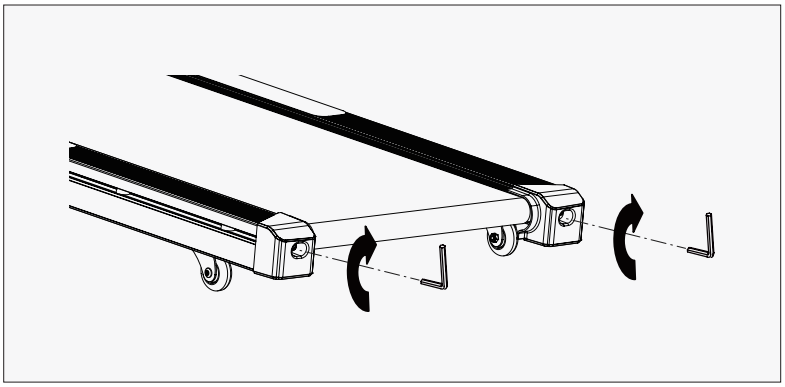

Tool:

Allen Wrench

IX. EXERCISE GUIDE

! PLEASE NOTE:

Before beginning any exercise program, consult your physician. This is important especially if you are over the age of 45 or individuals with pre-existing health problems.

The pulse sensors are not medical devices. Various factors, including the user's movement, may affect the accuracy of heart rate readings. The pulse sensors are intended only as an exercise aid in determining heart rate trends in general.

Exercising is great way to control your weight, improve your fitness and reduce the effect of aging and stress. The key to success is to make exercise a regular and enjoyable part of your everyday life.

The condition of your heart and lungs and how efficient they are in delivering oxygen via your blood to your muscles is an important factor to your fitness. Your muscles use this oxygen to provide enough energy for daily activity. This is called aerobic activity. When you are fit, your heart will not have to work so hard. It will pump a lot fewer times per minute, reducing the wear and tear of your heart.

So as you can see, the fitter you are, the healthier and greater you will feel.

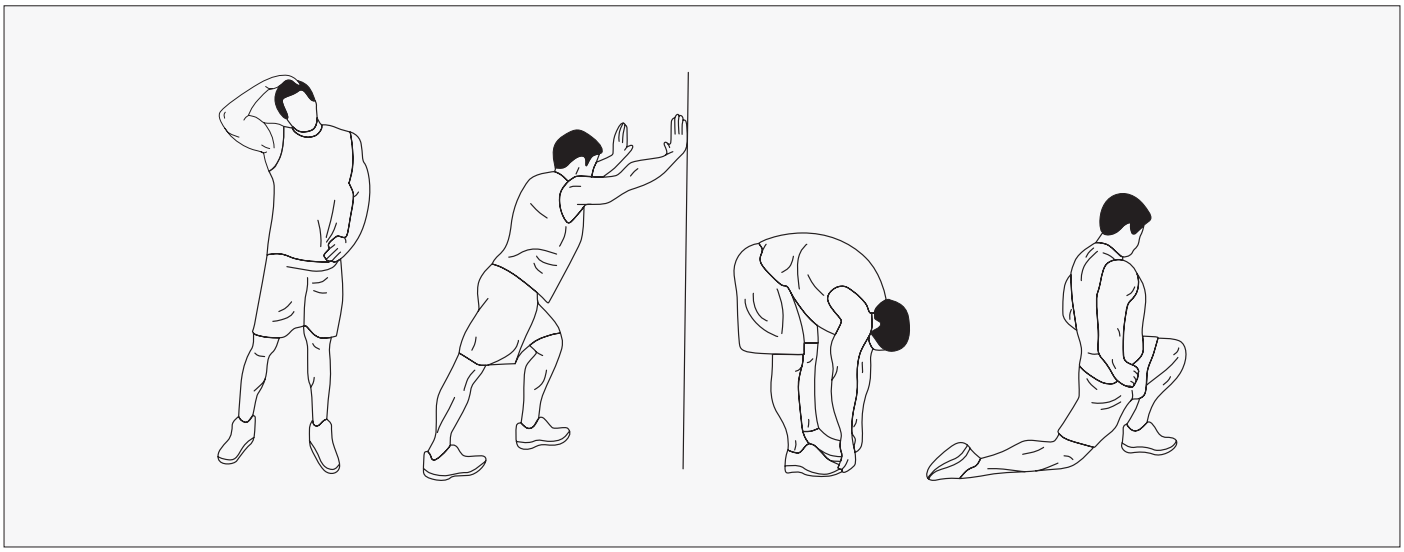

WARM UP

Start each workout with 5 to 10 minutes of stretching and some light exercises. A proper warm-up increases your body temperature, heart rate and circulation in preparation for exercise. Ease into your exercise.

After warming up, increase the intensity to your desired exercise program. Be sure to maintain your intensity for maximum performance. Breathe regularly and deeply as you exercise.

COOL DOWN

Finish each workout with a light jog or walk for at least 1 minute. Then complete 5 to 10 minutes of stretching to cool down. This will increase the flexibility of your muscles and will help prevent post-exercise problems.

WORKOUT GUIDELINES

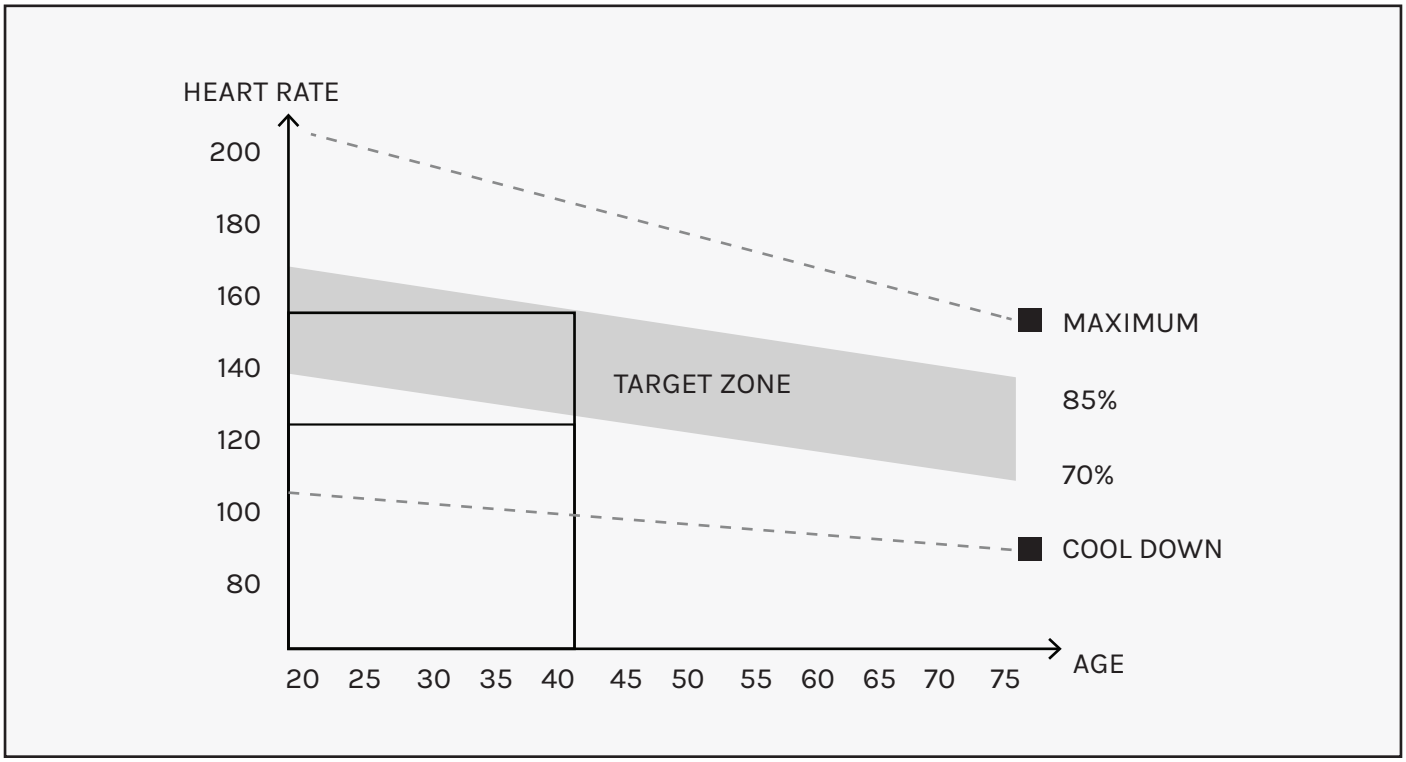

This is how your pulse should behave during general fitness exercise. Remember to warm up and cool down for a few minutes.

The most important factor here is the amount of effort you put in. The harder and longer you work, the more calories you will burn.

X. TROUBLESHOOTING

PROBLEM	POTENTIAL CAUSES	CORRECTIONS
Treadmill will not start.	1. Treadmill not plugged in. 2. Safety Tether Key is not correctly installed. 3. Cisuit breaker in the house has been tripped. 4. Treadmill circuit breaker has been tripped.	1. Plug the power cord into a wall outlet. 2. Reinstall the Safety Tether Key. 3. Reset the circuit breaker, or call an electrician to replace the circuit breaker. 4. Wait 5 minutes and then try to restart the treadmill.
Belt slips.	Belt not tight enough.	Adjust belt tension.
Belt hesitates when stepped on.	1. Not enough lubrication applied onto the running deck. 2. Belt is too tight.	1. Apply lubricant. 2. Adjust belt tension.
Belt is not centered.	Running belt tension not even across the rear roller.	Centre the belt.

XI. WARRANTY

AUSTRALIAN CONSUMER LAW

Many of our products come with a guarantee or warranty from the manufacturer. In addition, they come with guarantees that cannot be excluded under the Australian Consumer Law. You are entitled to a replacement or refund for a major failure and compensation for any other reasonably foreseeable loss or damage.

You are entitled to have the goods repaired or replaced if the goods fail to be of acceptable quality and the failure does not amount to a major failure. Full details of your consumer rights may be found at **www.consumerlaw.gov.au**.

Please visit our website to view our full warranty terms and conditions:
https://www.lsgfitness.com.au/pages/warranty

WARRANTY AND SUPPORT

Please email us at **support@lsgfitness.com.au** for all warranty or support issues.

For all warranty or support related enquiries, please lodge a support ticket first by sending us an email.

XII. HAND PULSE TECHNOLOGY

This product comes equipped with hand pulse sensors which are used to pick up tiny EKG/ECG signals that run through the body when your heart beats. These electrical EKG/ECG signals are very small and must be amplified 1000 times to make the signal viable for the computer to display your pulse.

To ensure proper operation:

- The user must maintain good, consistent contact on all four sensors.
- The users skin cannot be too dry or too wet.

Other factors that could affect the reading:

- Change of grip on the sensors (during slow pace walking and up to running).
- Tightening of hand muscles will produce small electrical signal.
- Static electricity charges from the air or from walking on the treadmill.

EKG/ECG Sensors may filter through actual EKG/ECG signals and "Noise" factors that may affect the reading. This will cause the pulse reading to be delayed and will take longer to update the display as the heart rate changes. Too much noise will create an incorrect reading. Medical conditions or having no electrical signal in the hands are other factors that may also affect pulse readings.

These are limitations of hand pulse technology and even the most expensive systems (which can cost upwards of $3,000) used in hospitals have the same problems. The difference is that a patient in a hospital is not running on a treadmill. Hand pulse technologies work well on stationary exercise machines like bikes and even elliptical cross trainers but are not perfect on a treadmill. We offer treadmills with a wireless heart rate receiver which may be the more accurate option.

To test if your hand pulse sensors are working up to specification, hold them while standing on the sidestep rails, not walking, and see if the reading is more in line with what you would expect. This will eliminate the movement and static electricity factors. If your hands are dry, then wet them slightly (saliva works as a great conductor if this doesn’t bother you).

SECURITY SUPPORT INFORMATION

Reporting

To report a cyber security issue, please email **support@gflgroup.com.au** with product details and a description of the issue.

We will acknowledge receipt and provide updates as it is investigated.

Device Support Period

This product will receive security updates for a minimum of 12 months from the date of purchase.

LSG

WWW.LSGFITNESS.COM.AU