LSG

Vulcan M2 Treadmill

USER MANUAL

kinomap
30 DAY FREE TRIAL
*Terms and conditions apply. Offer can be rescinded at any time.

Find the Digital Manual Online

Product may vary slightly from the item pictured due to model upgrades.

Read all instructions carefully before using this product. Retain this owner's manual for future reference.

NOTE:
This manual may be subject to updates or changes. Up to date manuals are available through our website at www.lsgfitness.com.au

TABLE OF CONTENTS

I. Important Safety Instructions 03

II. Important Electrical Information 05

III. Important Operating Instructions 06

IV. Assembly Instructions 07

V. Folding Instructions 11

VI. Operation Guide 12

VII. Exercise Guide 23

VIII. Maintenance Instructions 25

IX. Exploded Diagram 29

X. Parts List 30

XI. Trouble Shooting 32

XII. Warranty 34

XIII. Security Support Information 34

XIV. Hand Pulse Technology 35

I. IMPORTANT SAFETY INSTRUCTIONS

⚠ WARNING: Read all instructions before using this treadmill.

It is important your treadmill receives regular maintenance to prolong its useful life. Failing to regularly maintain your treadmill may void your warranty.

⚠ DANGER

To reduce the risk of electric shock disconnect your treadmill from the electrical outlet prior to cleaning and/or service work.

DO NOT USE AN EXTENSION CORD:

DO NOT ATTEMPT TO DISABLE THE GROUNDED PLUG BY USING IMPROPER ADAPTERS OR IN ANY WAY MODIFY THE CORD SET.

- Install the treadmill on a flat level surface with access to a 220-240 volt (50/60Hz), grounded outlet.
- Do not operate treadmill on deeply padded, plush or shag carpet. Damage to both carpet and treadmill may result.
- Do not block the rear of the treadmill. Provide a minimum of 1 metre clearance between the rear of the treadmill and any fixed object.
- Place your unit on a solid, level surface when in use.
- When running, make sure the plastic clip is fastened on your clothing. It is for your safety, should you fall or move too far back on the treadmill.
- Keep hands away from all moving parts.
- Never operate the treadmill if it has a damaged power cord or plug. When damaged, these must be replaced by the manufacturer, its service agent or similarly qualified persons in order to avoid a hazard.
- Keep the cord away from heated surfaces.
- Do not operate where aerosol spray products are being used or where oxygen is being administered. Sparks from the motor may ignite a highly gaseous environment.
- Never drop or insert any object into any openings.

- The treadmill is intended for in-home use only and is not suitable for commercial environments.
- To disconnect, turn all controls to the off position, remove the safety key, and then remove the plug from the outlet.
- The pulse sensors are not medical devices. Various factors, including the user's movement, may affect the accuracy of heart rate readings. The pulse sensors are intended only as exercise aids in determining heart rate trends in general.
- Use the handrails provided; they are for your safety.
- Wear proper shoes. High heels, dress shoes, sandals or bare feet are not suitable for use on your treadmill. Quality athletic shoes are recommended to avoid leg fatigue.
- Before undertaking any type of exercise program, it is recommended that you consult a doctor.
- Injuries to health may result from incorrect or excessive training.
- This appliance is not intended for use by persons (including children) with reduced physical, sensory or mental capabilities, or lack of experience and knowledge, unless they have been given supervision or instruction concerning use of the appliance by a person responsible for their safety.
- **WARNING:** Heart rate monitoring systems may be inaccurate. If you feel faint stop exercising immediately.
- Children should not be allowed on or around the equipment, even when not in use.
- Children should be supervised to ensure that they do not play with this machine.
- Loose-fitting clothing or jewellery that could become an entanglement hazard should not be worn.
- Training shoes should be worn when using the equipment.
- Equipment must be used on a level and stable surface.
- All fixings should be checked before the equipment is used.
- All literature relating to the use of the equipment should be retained for future reference.
- Recommended operating temperature: 5-40°C.

! Remove the safety key after use to prevent unauthorized treadmill operation.

II. IMPORTANT ELECTRICAL INFORMATION

⚠ WARNING!

- Route the power cord away from any moving part of the treadmill including the elevation mechanism and transport wheels.
- **NEVER** remove any cover without first disconnecting AC power.
- **NEVER** expose this treadmill to rain or moisture. This treadmill is not designed for use outdoors, near a pool, or in any other high humidity environment.
- This is a high-power item; please do not share the same outlet with other high-power machines such as, fridges, air conditioning etc. Please choose an outlet exclusively for the machine and make sure the fuse is 10A.

III. IMPORTANT OPERATING INSTRUCTIONS

- Understand that changes in speed and incline do not occur immediately. Set your desired speed on the computer console and release the adjustment key. The computer will obey the command gradually.

- Use caution while participating in other activities while walking on your treadmill, such as watching television, reading, etc. These distractions may cause you to lose balance or stray from walking in the centre of the belt; which may result in serious injury.

- This unit starts with at a very low speed. It is recommended to stand on the side rails and only step on the treadmill as it is moving on a slow speed. This will prolong the life of your motor and run the belt smoothly.

- In order to prevent losing balance and suffering unexpected injury, never mount or dismount the treadmill while the belt is moving at high speeds.

- Always hold on to handrail while making control changes.

- A safety key is provided with this machine. Remove the safety key will stop the walking belt immediately; the treadmill will shut off automatically. Inserting the safety key will reset the display.

- Do not use excessive pressure on console control keys. They are precision set to function properly with little finger pressure.

- Replace any defective components immediately. The machine must be kept out of use until repaired.

- Belt wear-in period: all treadmills make a certain type of thumping noise due to the belt riding over the rollers, especially new treadmills. This noise will diminish over time, although may not completely go away. The belt will stretch over time, causing it to ride smoother over the rollers.

IV. ASSEMBLY INSTRUCTIONS

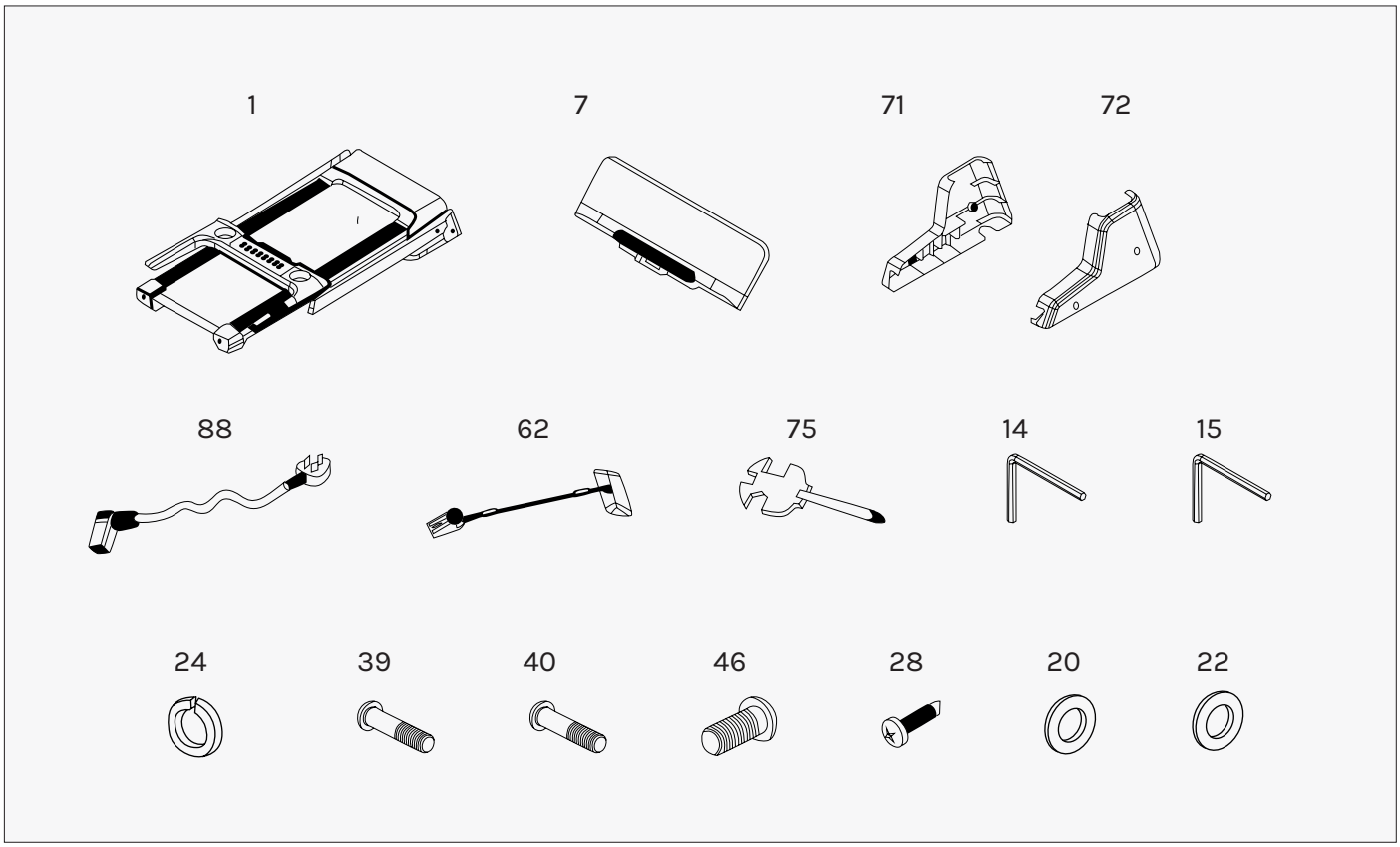

No.	Description	Specs	Qty
1	Main frame		1
7	Panel assembly		1
71	Left base cover		1
72	Right base cover		1
88	Power Wire		1
75	Oil bottle		1
62	Safety key		1
14	5#Allen wrench		1
15	6#Allen wrench		1

No.	Description	Specs	Qty
16	Wrench with screwdriver	S =13, 14, 15	1
39	Bolt	M8*45	2
40	Bolt	M6*15	4
46	Bolt	M8*20	4
28	Screw	ST4.2*20	4
20	Flat washer	6	4
22	Arc washer	8	4
24	Spring washer	6	4

FIXING TOOLS:

5# Allen Wrench 5mm	1pc
6# Allen Wrench 6mm	1pc
Wrench with screwdriver S =13, 14, 15	1pc

⚠ WARNING!

Do not connect power before completing assembly

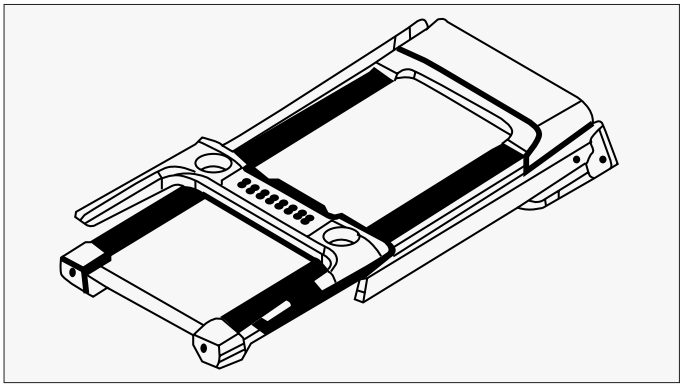

STEP 1

1. Open the carton.
2. Extract the parts listed above.
3. Place the Main Frame onto level ground.

Warning:

Use 2 people to remove treadmill from the box to avoid injury.

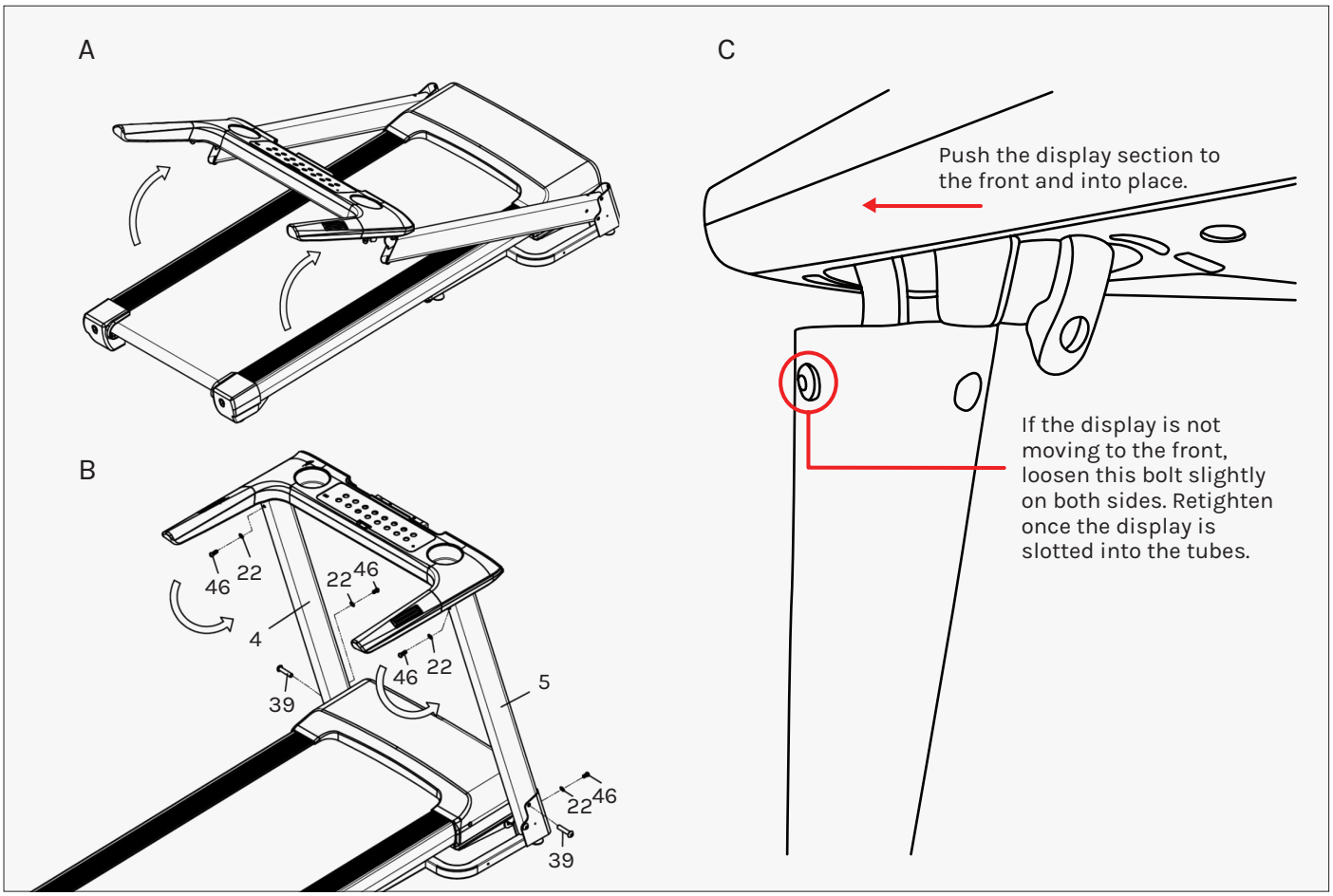

STEP 2

1. Unfold the treadmill upright arms and display, refer to picture A. While one person is holding the upright arms (#4 & #5), a second person should hold the display section then push the display forward until it slots into place. It will require a bit of force however if it is not moving, you can loosen the bolt at the front slightly on both sides (refer to picture C).
2. Check all cables are inside the tubes and connected. Be careful not to pinch any cables.
3. Use 5# Allen wrench (14) and lock the computer onto the L&R upright tubes with the bolt (46) and Arc washer (22) lightly. Refer to picture B.
4. Use 5# Allen wrench (14), bolt (39) and lock the upright (4/5) into the base frame. Refer to picture B.
5. Use 5# Allen wrench (14), Bolt (46) and Arc washer (22) to lock the upright into the main frame lightly. Refer to picture B.

NOTE: Left side and right side assembly are the same.

WARNING: A second person is needed to hold the frame while you assembly to avoid injury.

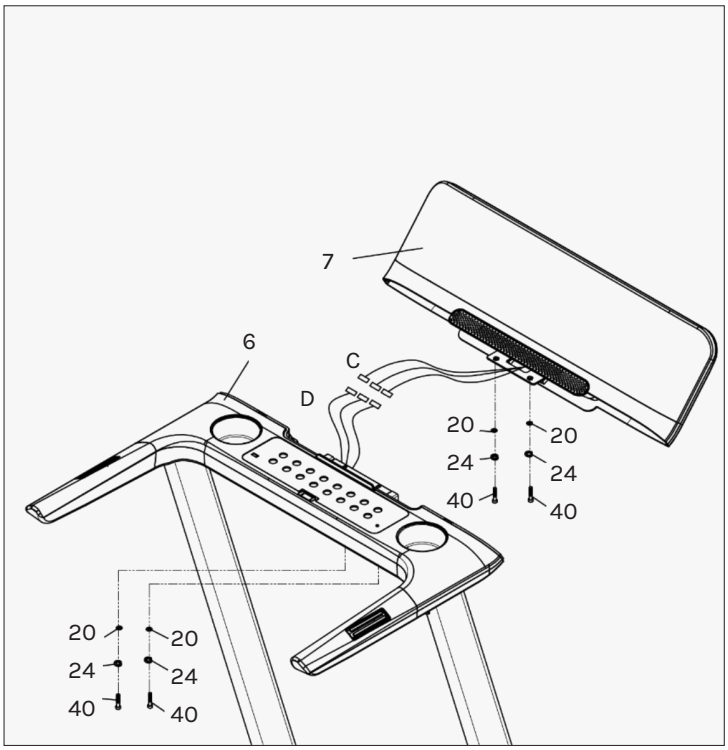

STEP 3

1. Connect the communication lines C and D one by one.

2. Then put the panel assembly (7) into console board assembly (6) and lock the bolt (40), Spring washer (24), Flat washer (20) into panel assembly (7).

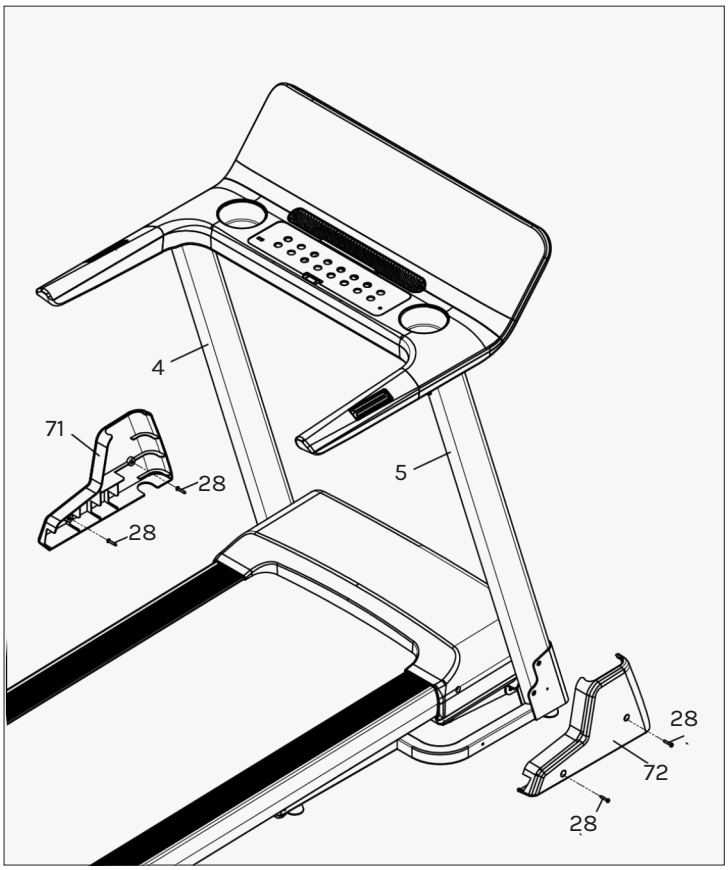

STEP 4

1. Lock all above bolt tightly in upright and computer.

2. Use wrench with screwdriver (16), bolt (28) to lock the left base cover (71) into the base frame.

3. Right side is same as the left side.

NOTE: The base cover needs to be fastened to the upright.

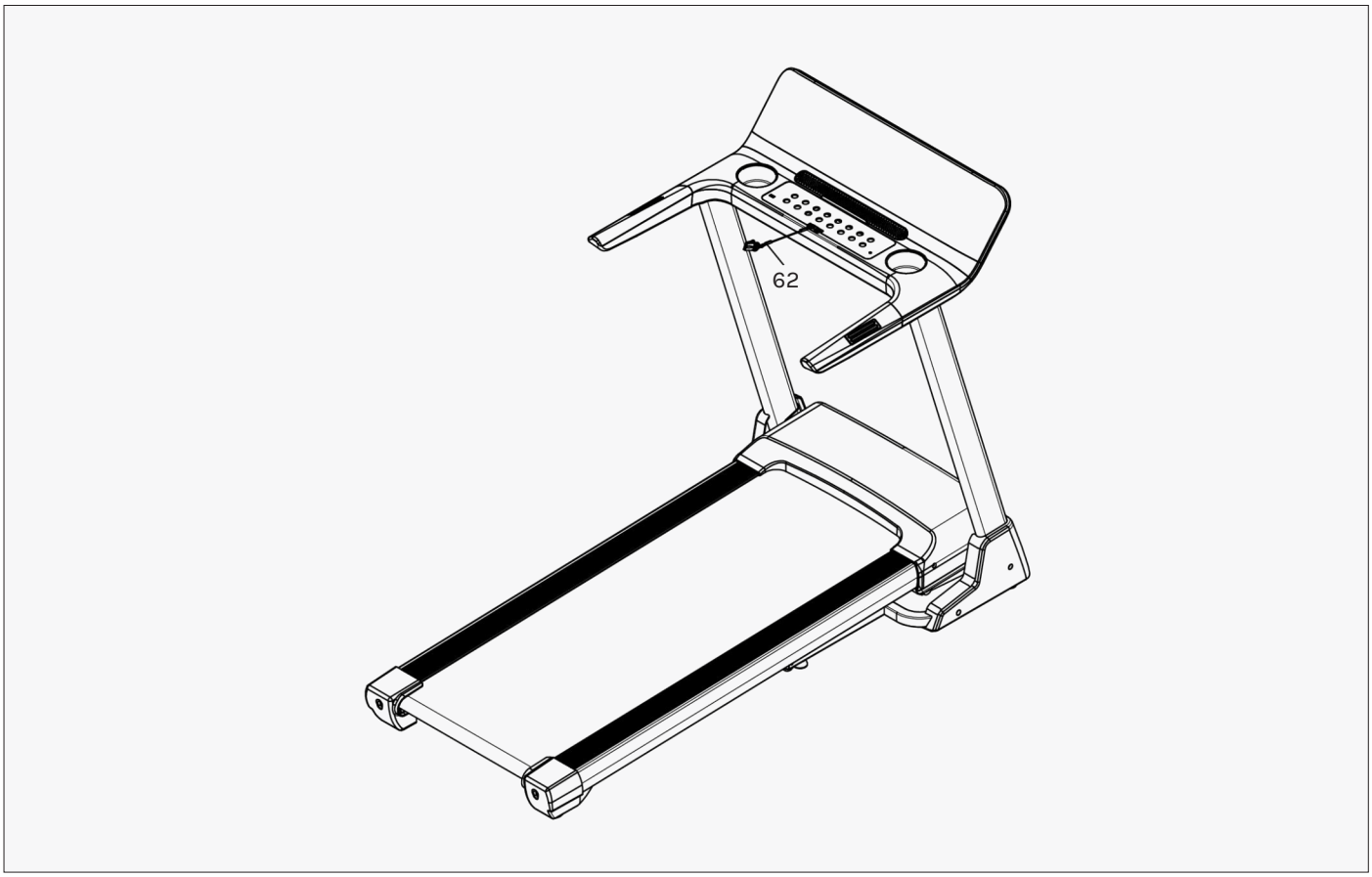

STEP 5

1. Place the safety key (62) on the computer.

WARNING: Check all bolts are fastened and secured as per instructions before turning on machine.

V. FOLDING INSTRUCTIONS

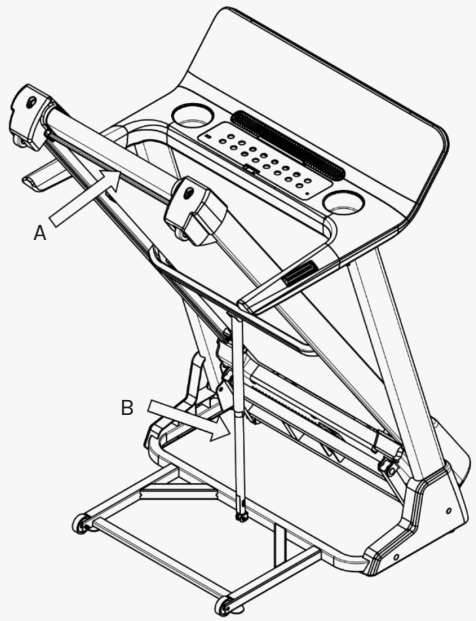

FOLDING

Pull up the base frame at position (A) until you hear the sound that the air pressure bar (B) is locked into the round tube.

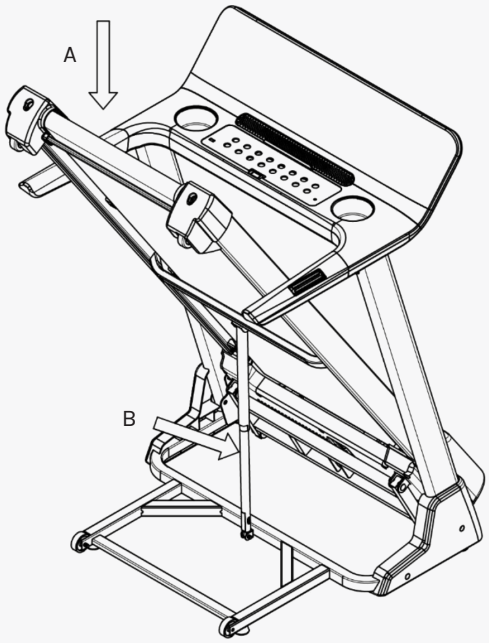

UNFOLDING

Support place A with hand and using your feet, apply pressure to the air pressure bar B to unlock the folding mechanism.

The Base will come down slowly on its own.

(!) **WARNING:** Keep pets and children aware from the machine when unfolding.

VI. OPERATION GUIDE

A. OVERVIEW

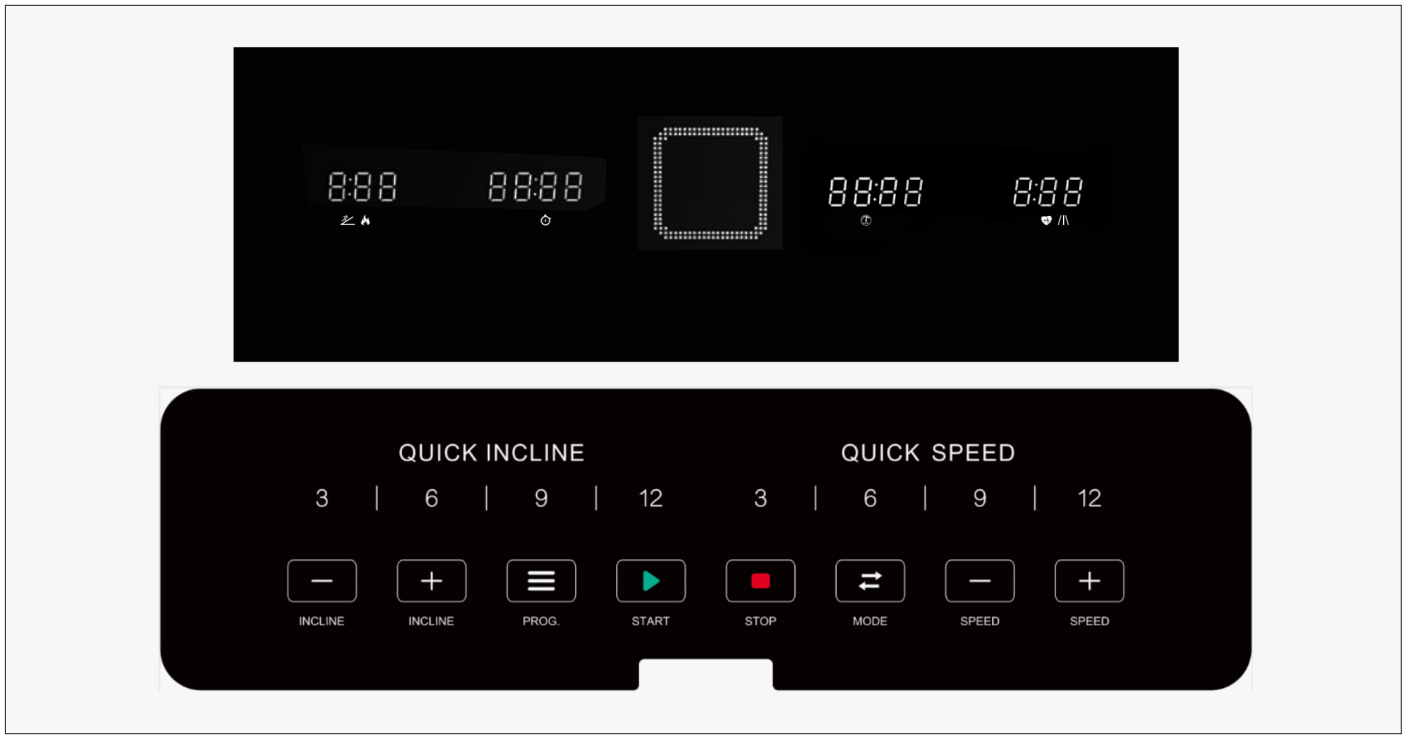

B. LCD WINDOW DISPLAY

1. LCD WINDOW DISPLAY DETAILS

INCILNE and CALORIES: Show Incline and calories. When the corresponding icon is lit, the corresponding element is displayed.

TIME: Show running time.

SPEED: Show speed.

PULSE and DISTANCE: Show pulse data and running distance. When the corresponding icon is lit, the reading with be displayed.

The middle window is lattice window, show some tips.

2. BUTTON FUNCTION

"PROG" button: Press this button to choose program from manual mode—P1----P99--FAT.

"MODE" button: When machine in standby state, press this button to choose the mode: manual mode, time count down mode, distance count down mode, calories count down mode.

When machine in FAT mode, the sequence is "Sex", "Age", "Height", "Weight".

"START" button: Press this button to start the machine. The machine will run at the lowest speed or at the speed of default program after 3 seconds time count down.

"STOP" button: Press this button to stop the machine, the machine will slow the speed still stop.

"SPEED+/-" button: Adjust the speed. Press the button to adjust the speed when running or adjust the data when stop.

"SPEED(3,6,9,12)": Adjust the speed quickly.

"INCLINE(3,6,9,12)" button: Adjust the incline quickly.

Left Handrail Button: Incline adjustment button.

Right handrail button: Speed adjustment button.

Notice: When any button is pressed, it will be accompanied by a prompt tone. When the button is adjusted for parameter overrun, it will be accompanied by a long tone prompt. There is no beep when the button is pressed Invalid.

3. MAIN FUNCTION

Open the power switch, the screen window will light up, the machine will enter standby state.

4. START-UP QUICKLY (MANUAL):

Put safety key, press 'START' button, the treadmill will run at the lowest speed in 3 seconds, press SPEED+/- to adjust the speed. Press INCLINE+/- to adjust the incline. Press the 'STOP' button or take out the safety key directly to stop the treadmill.

4.2. COUNT DOWN MODE:

Press the 'MODE' button to choose; time countdown mode, distance count down mode, calories countdown mode, and the screen window will show the default data and blink. Use SPEED+/- and INCLINE+/- to set the data. Press 'START' button, the machine will run at the lowest speed, you can press SPEED+/- to change the speed, press INCLINE+/- to change the incline. When it counts down to 0, the machine will stop smoothly. You can also stop the machine by pressing 'STOP' button or taking out the safety key.

4.3. INNER INSTALL PROGRAM:

Press 'PROG' button to choose the preset program from P1----P15. When the program is selected the time window will show default data and blink. Press SPEED+/- or INCLINE+/- button to set the running time. Each program has been divided into 16 section. Each exercise time = the setting time/16.

Press ‘START’, the machine will run at the first section speed and incline data. When the section is over, it will move to next section automatically. The speed and incline will change according to the program setting. When program is finished the machine will slow down to a stop.

You can still change the speed and incline by the SPEED+/- and INCLINE+/- or Left/right Handrail Button. When the program enters the next section the Speed/Incline will come back to the default setting. You can stop the program by pressing "Stop" or pulling the emergency safety key.
At the end of the program mode the treadmill will flash with 15 beeps, after which all data will be cleared to 0 and come into standby status.

5. PULSE TEST

When holding the hand pulse sensor by two hands the reading will show after 5 seconds. In order to get proper reading, hold it for more than 30 seconds. The pulse data is just for reference and is not a medical device or medical data.

6. BODY FAT TEST

When the treadmill is on standby, press ‘PROGRAM’ button until it shows ‘FAT’ show in the window. ‘FAT’ is body fat test mode.

Press ‘MODE’ to choose parameter ‘SEX / AGE / HEIGHT / WEIGHT’. The corresponding window will show "-1-", "-2-", "-3-", "-4-". Press SPEED+/- to adjust the data and set the parameter. The corresponding window will show the data.

Press ‘MODE’ button to finish, the window will show "-5-" and "---" enter ready to go condition. Hold the handle pulse with two hands, it will show your BMI data after 5 seconds.

6.1 DATA DISPLAY AND SET RANGE

PARAMETER TYPE	DEFAULT	SETTING RANGE	MARK
SEX (-1-)	0 (MALE)	0—1	0= MALE 1= FEMALE
AGE (-2-)	25	10—99	
HEIGHT (-3-)	170 CM	100—240 CM	
WEIGHT (-4-)	70KG	20—160KG	

6.2 BMI REFERENCE

(BMI)	
<19	Under weight
19--26	Normal weight
26--30	Over weigh
>30	Obesity

7. SLEEP FUNCTION

Stopped more than 10 minutes, the system turns off all displays and enters a sleep mode. Press any key to wake up.

8. SAFETY KEY FUNCTION

Whenever safety key is pulled out, the treadmill will stop quickly, and all data will be reset. Safety key must be placed back into slot to start the machine.

9. BLUETOOTH FUNCTION

Turn on your devices Bluetooth and connect to the treadmill. You can then adjust your audio on your device.

10. RUNNING DATA DISPLAY AND SETTING RANGE

	SHOW RANGE	DEFAULT PROGRAM	DEFAULT MODE	SET RANGE
SPEED(KM/H)	1.0-18KM	--------	--------	--------
INCLINE	20			0—20
TIME	0:00—99:59	30:00	30:00	5:00---99:00
DISTANCE	0.00KM—99.9KM	--------	1.00KM	0.5KM—99.9KM
CALORIES	0Kcl—999Kcl	--------	50Kcl	10Kcl—990Kcl

10. RUNNING DATA DISPLAY AND SETTING RANGE

PROG	/ TIME	SETTING TIME/16= INTERVAL RUNNING TIME															
		1	2	3	4	5	6	7	8	9	10	11	12	13	14	15	16
P01	SPEED	2	3	3	4	4	5	5	3	4	5	4	4	3	3	5	3
	INCLINE	1	1	2	2	3	3	2	2	1	2	2	1	3	2	2	2
P02	SPEED	2	4	4	5	6	6	6	4	5	6	4	4	2	5	4	2
	INCLINE	1	2	2	2	3	2	2	2	2	2	3	3	4	3	2	2
P03	SPEED	2	4	4	6	7	7	7	4	7	7	4	4	4	5	3	2
	INCLINE	2	3	3	2	3	3	2	2	2	2	4	4	6	3	2	2
P04	SPEED	3	5	5	6	5	7	7	8	8	5	9	5	6	4	4	3
	INCLINE	2	3	3	2	3	3	2	2	2	2	4	4	6	3	2	2
P05	SPEED	2	4	4	5	7	5	6	7	8	8	5	4	6	5	4	2
	INCLINE	3	3	3	4	5	5	4	4	4	4	5	5	3	2	2	2
P06	SPEED	2	4	4	4	8	8	6	7	8	8	6	4	5	4	3	2
	INCLINE	3	5	5	5	4	3	3	3	3	4	4	4	3	4	3	2
P07	SPEED	2	3	3	3	3	4	5	3	4	5	3	3	6	5	3	3
	INCLINE	4	4	4	4	6	6	6	7	7	8	8	9	6	5	4	4
P08	SPEED	2	3	3	6	4	6	7	4	6	7	4	4	3	4	4	2
	INCLINE	4	5	5	5	6	7	8	9	9	9	10	10	12	8	6	3
P09	SPEED	2	4	4	7	7	8	4	8	9	9	4	4	6	3	3	2
	INCLINE	5	5	5	6	4	4	6	6	5	5	8	8	9	7	4	2
P10	SPEED	2	4	5	6	4	6	8	8	6	6	5	4	4	4	3	3
	INCLINE	5	6	6	6	8	8	4	4	4	5	5	8	10	8	6	3
P11	SPEED	2	5	8	10	10	10	7	7	10	10	5	5	5	5	4	3
	INCLINE	4	5	3	2	2	2	2	2	2	4	5	6	5	5	2	0
P12	SPEED	3	4	9	9	5	8	5	9	7	5	5	7	5	7	6	3
	INCLINE	1	2	3	2	5	0	0	2	3	5	7	3	6	5	3	3
P13	SPEED	3	6	7	5	7	5	5	7	9	5	8	5	9	9	4	3
	INCLINE	3	3	5	6	3	7	5	3	2	0	0	5	2	3	2	1

P14	SPEED	2	2	4	5	4	3	2	1	2	3	4	5	4	3	2	1
	INCLINE	4	4	4	4	6	6	6	7	7	8	8	9	6	5	4	4
P15	SPEED	2	4	6	8	4	4	2	2	2	4	6	8	4	4	2	2
	INCLINE	3	3	3	4	5	5	4	4	4	4	5	5	3	2	2	2
P16	SPEED	2	4	6	8	6	4	2	2	2	4	6	8	4	4	2	2
	INCLINE	5	5	5	6	4	4	6	6	5	5	8	8	9	7	4	1
P17	SPEED	2	2	6	6	6	6	2	2	2	2	6	6	6	6	2	2
	INCLINE	4	5	5	5	6	7	8	9	9	9	10	10	12	8	6	3
P18	SPEED	2	3	4	5	4	5	3	2	2	3	4	5	4	5	3	2
	INCLINE	4	4	4	4	6	6	6	7	7	8	8	9	6	5	3	2
P19	SPEED	2	4	6	2	2	4	6	2	2	4	6	2	2	4	6	2
	INCLINE	3	5	5	5	4	3	3	3	3	4	4	4	3	4	3	2
P20	SPEED	1	3	4	5	4	3	2	1	1	3	4	5	4	3	2	1
	INCLINE	3	3	3	4	5	5	4	4	4	4	5	5	3	2	2	2
P21	SPEED	2	3	3	4	4	5	5	3	4	5	4	4	3	3	5	3
	INCLINE	1	1	2	2	3	3	2	2	1	2	2	1	3	2	2	2
P22	SPEED	2	4	4	5	6	6	6	4	5	6	4	4	2	5	4	2
	INCLINE	1	2	2	2	3	2	2	2	2	2	3	3	4	3	2	2
P23	SPEED	2	4	4	6	7	7	7	4	7	7	4	4	4	5	3	2
	INCLINE	2	3	3	2	3	3	2	2	2	2	4	4	6	3	2	2
P24	SPEED	3	5	5	6	5	7	7	8	8	5	9	5	6	4	4	3
	INCLINE	2	3	3	2	3	3	2	2	2	2	4	4	6	3	2	2
P25	SPEED	2	4	4	5	7	5	6	7	8	8	5	4	6	5	4	2
	INCLINE	3	3	3	4	5	5	4	4	4	4	5	5	3	2	2	2
P26	SPEED	2	4	4	4	8	8	6	7	8	8	6	4	5	4	3	2
	INCLINE	3	5	5	5	4	3	3	3	3	4	4	4	3	4	3	2
P27	SPEED	2	3	3	3	3	4	5	3	4	5	3	3	6	5	3	3
	INCLINE	4	4	4	4	6	6	6	7	7	8	8	9	6	5	3	3
P28	SPEED	2	3	3	6	4	6	7	4	6	7	4	4	3	4	4	2
	INCLINE	4	5	5	5	6	7	8	9	9	9	10	10	12	8	6	3

P29	SPEED	2	4	4	7	7	8	4	8	9	9	4	4	6	3	3	2
	INCLINE	5	5	5	6	4	4	6	6	5	5	8	8	9	7	4	2
P30	SPEED	2	4	5	6	4	6	8	8	6	6	5	4	4	4	3	3
	INCLINE	5	6	6	6	8	8	4	4	4	5	5	8	10	8	6	3
P31	SPEED	2	5	8	10	10	10	7	7	10	10	6	6	5	5	4	3
	INCLINE	4	5	3	2	2	2	2	2	2	4	5	6	5	5	2	0
P32	SPEED	3	4	9	9	5	8	5	9	7	5	5	7	5	7	6	3
	INCLINE	1	2	3	2	5	0	0	2	3	5	7	3	6	5	3	3
P33	SPEED	3	4	9	9	5	8	5	9	7	5	5	7	5	7	6	3
	INCLINE	1	2	3	2	5	0	0	2	3	5	7	3	6	5	3	3
P34	SPEED	2	2	4	5	4	3	2	1	2	3	4	5	4	3	2	1
	INCLINE	1	1	1	1	1	1	1	1	1	1	1	1	1	1	1	1
P35	SPEED	2	4	6	8	4	4	2	2	2	4	6	8	4	4	2	2
	INCLINE	1	1	1	1	1	1	1	1	1	1	1	1	1	1	1	1
P36	SPEED	2	4	6	8	6	4	2	2	2	4	6	8	4	4	2	2
	INCLINE	5	5	5	6	4	4	6	6	5	5	8	8	9	7	4	2
P37	SPEED	2	2	6	6	6	6	2	2	2	2	6	6	6	6	2	2
	INCLINE	4	5	5	5	6	7	8	9	9	9	10	10	12	8	6	3
P38	SPEED	2	3	4	5	4	5	3	2	2	3	4	5	4	5	3	2
	INCLINE	4	4	4	4	6	6	6	7	7	8	8	9	6	5	3	3
P39	SPEED	2	4	6	2	2	4	6	2	2	4	6	2	2	4	6	2
	INCLINE	3	5	5	5	4	3	3	3	3	4	4	4	3	4	3	2
P40	SPEED	1	3	4	5	4	3	2	1	1	3	4	5	4	3	2	1
	INCLINE	3	3	3	4	5	5	4	4	4	4	5	5	3	2	2	2
P41	SPEED	2	3	3	4	4	5	5	3	4	5	4	4	3	3	5	3
	INCLINE	1	1	2	2	3	3	2	2	1	2	2	1	3	2	2	2
P42	SPEED	2	4	4	5	6	6	6	4	5	6	4	4	2	5	4	2
	INCLINE	1	2	2	2	3	2	2	2	2	2	3	3	4	3	2	2
P43	SPEED	2	4	4	6	7	7	7	4	7	7	4	4	4	5	3	2
	INCLINE	2	3	3	2	3	3	2	2	2	2	4	4	6	3	2	2

P44	SPEED	3	5	5	6	5	7	7	8	8	5	9	5	6	4	4	3
	INCLINE	2	3	3	2	3	3	2	2	2	2	4	4	6	3	2	2
P45	SPEED	2	4	4	5	7	5	6	7	8	8	5	4	6	5	4	2
	INCLINE	3	3	3	4	5	5	4	4	4	4	5	5	3	2	2	2
P46	SPEED	2	4	4	4	8	8	6	7	8	8	6	4	5	4	3	2
	INCLINE	3	5	5	5	4	3	3	3	3	4	4	4	3	4	3	2
P47	SPEED	2	3	3	3	3	4	5	3	4	5	3	3	6	5	3	3
	INCLINE	4	4	4	4	6	6	6	7	7	8	8	9	6	5	3	3
P48	SPEED	2	3	3	6	4	6	7	4	6	7	4	4	3	4	4	2
	INCLINE	4	5	5	5	6	7	8	9	9	9	10	10	12	8	6	3
P49	SPEED	2	4	4	7	7	8	4	8	9	9	4	4	6	3	3	2
	INCLINE	5	5	5	6	4	4	6	6	5	5	8	8	9	7	4	2
P50	SPEED	2	4	5	6	4	6	8	8	6	6	5	4	4	4	3	3
	INCLINE	5	6	6	6	8	8	4	4	4	5	5	8	10	8	6	3
P51	SPEED	2	5	8	10	10	10	7	7	10	10	6	6	5	5	4	3
	INCLINE	4	5	3	2	2	2	2	2	2	4	5	6	5	5	2	0
P52	SPEED	3	4	9	9	5	8	5	9	7	5	5	7	5	7	6	3
	INCLINE	1	2	3	2	5	0	0	2	3	5	7	3	6	5	3	3
P53	SPEED	3	4	9	9	5	8	5	9	7	5	5	7	5	7	6	3
	INCLINE	1	2	3	2	5	0	0	2	3	5	7	3	6	5	3	3
P54	SPEED	2	2	4	5	4	3	2	1	2	3	4	5	4	3	2	1
	INCLINE	1	1	1	1	1	1	1	1	1	1	1	1	1	1	1	1
P55	SPEED	2	4	6	8	4	4	2	2	2	4	6	8	4	4	2	2
	INCLINE	1	1	1	1	1	1	1	1	1	1	1	1	1	1	1	1
P56	SPEED	2	4	6	8	6	4	2	2	2	4	6	8	4	4	2	2
	INCLINE	5	5	5	6	4	4	6	6	5	5	8	8	9	7	4	2
P57	SPEED	2	2	6	6	6	6	2	2	2	2	6	6	6	6	2	2
	INCLINE	4	5	5	5	6	7	8	9	9	9	10	10	12	8	6	3
P58	SPEED	2	3	4	5	4	5	3	2	2	3	4	5	4	5	3	2
	INCLINE	4	4	4	4	6	6	6	7	7	8	8	9	6	5	3	3

P59	SPEED	2	4	6	2	2	4	6	2	2	4	6	2	2	4	6	2
	INCLINE	3	5	5	5	4	3	3	3	3	4	4	4	3	4	3	2
P60	SPEED	1	3	4	5	4	3	2	1	1	3	4	5	4	3	2	1
	INCLINE	3	3	3	4	5	5	4	4	4	4	5	5	3	2	2	2
P61	SPEED	2	3	3	4	4	5	5	3	4	5	4	4	3	3	5	3
	INCLINE	1	1	2	2	3	3	2	2	1	2	2	1	3	2	2	2
P62	SPEED	2	4	4	5	6	6	6	4	5	6	4	4	2	5	4	2
	INCLINE	1	2	2	2	3	2	2	2	2	2	3	3	4	3	2	2
P63	SPEED	2	4	4	6	7	7	7	4	7	7	4	4	4	5	3	2
	INCLINE	2	3	3	2	3	3	2	2	2	2	4	4	6	3	2	2
P64	SPEED	3	5	5	6	5	7	7	8	8	5	9	5	6	4	4	3
	INCLINE	2	3	3	2	3	3	2	2	2	2	4	4	6	3	2	2
P65	SPEED	2	4	4	5	7	5	6	7	8	8	5	4	6	5	4	2
	INCLINE	3	3	3	4	5	5	4	4	4	4	5	5	3	2	2	2
P66	SPEED	2	4	4	4	8	8	6	7	8	8	6	4	5	4	3	2
	INCLINE	3	5	5	5	4	3	3	3	3	4	4	4	3	4	3	2
P67	SPEED	2	3	3	3	3	4	5	3	4	5	3	3	6	5	3	3
	INCLINE	4	4	4	4	6	6	6	7	7	8	8	9	6	5	3	3
P68	SPEED	2	3	3	6	4	6	7	4	6	7	4	4	3	4	4	2
	INCLINE	4	5	5	5	6	7	8	9	9	9	10	10	12	8	6	3
P69	SPEED	2	4	4	7	7	8	4	8	9	9	4	4	6	3	3	2
	INCLINE	5	5	5	6	4	4	6	6	5	5	8	8	9	7	4	2
P70	SPEED	2	4	5	6	4	6	8	8	6	6	5	4	4	4	3	3
	INCLINE	5	6	6	6	8	8	4	4	4	5	5	8	10	8	6	3
P71	SPEED	2	5	8	10	10	10	7	7	10	10	6	6	5	5	4	3
	INCLINE	4	5	3	2	2	2	2	2	2	4	5	6	5	5	2	0
P72	SPEED	3	4	9	9	5	8	5	9	7	5	5	7	5	7	6	3
	INCLINE	1	2	3	2	5	0	0	2	3	5	7	3	6	5	3	3
P73	SPEED	3	4	9	9	5	8	5	9	7	5	5	7	5	7	6	3
	INCLINE	1	2	3	2	5	0	0	2	3	5	7	3	6	5	3	3

P74	SPEED	2	2	4	5	4	3	2	1	2	3	4	5	4	3	2	1
	INCLINE	1	1	1	1	1	1	1	1	1	1	1	1	1	1	1	1
P75	SPEED	2	4	6	8	4	4	2	2	2	4	6	8	4	4	2	2
	INCLINE	1	1	1	1	1	1	1	1	1	1	1	1	1	1	1	1
P76	SPEED	2	4	6	8	6	4	2	2	2	4	6	8	4	4	2	2
	INCLINE	5	5	5	6	4	4	6	6	5	5	8	8	9	7	4	2
P77	SPEED	2	2	6	6	6	6	2	2	2	2	6	6	6	6	2	2
	INCLINE	4	5	5	5	6	7	8	9	9	9	10	10	12	8	6	3
P78	SPEED	2	3	4	5	4	5	3	2	2	3	4	5	4	5	3	2
	INCLINE	4	4	4	4	6	6	6	7	7	8	8	9	6	5	3	3
P79	SPEED	2	4	6	2	2	4	6	2	2	4	6	2	2	4	6	2
	INCLINE	3	5	5	5	4	3	3	3	3	4	4	4	3	4	3	2
P80	SPEED	1	3	4	5	4	3	2	1	1	3	4	5	4	3	2	1
	INCLINE	3	3	3	4	5	5	4	4	4	4	5	5	3	2	2	2
P81	SPEED	2	3	3	4	4	5	5	3	4	5	4	4	3	3	5	3
	INCLINE	1	1	2	2	3	3	2	2	1	2	2	1	3	2	2	
P82	SPEED	2	4	4	5	6	6	6	4	5	6	4	4	2	5	4	2
	INCLINE	1	2	2	2	3	2	2	2	2	2	3	3	4	3	2	2
P83	SPEED	2	4	4	6	7	7	7	4	7	7	4	4	4	5	3	2
	INCLINE	2	3	3	2	3	3	2	2	2	2	4	4	6	3	2	2
P84	SPEED	3	5	5	6	5	7	7	8	8	5	9	5	6	4	4	3
	INCLINE	2	3	3	2	3	3	2	2	2	2	4	4	6	3	2	2
P85	SPEED	2	4	4	5	7	5	6	7	8	8	5	4	6	5	4	2
	INCLINE	3	3	3	4	5	5	4	4	4	4	5	5	3	2	2	2
P86	SPEED	2	4	4	4	8	8	6	7	8	8	6	4	5	4	3	2
	INCLINE	3	5	5	5	4	3	3	3	3	4	4	4	3	4	3	2
P87	SPEED	2	3	3	3	3	4	5	3	4	5	3	3	6	5	3	3
	INCLINE	4	4	4	4	6	6	6	7	7	8	8	9	6	5	3	3

P88	SPEED	2	3	3	6	4	6	7	4	6	7	4	4	3	4	4	2
	INCLINE	4	5	5	5	6	7	8	9	9	9	10	10	12	8	6	3
P89	SPEED	2	4	4	7	7	8	4	8	9	9	4	4	6	3	3	2
	INCLINE	5	5	5	6	4	4	6	6	5	5	8	8	9	7	4	2
P90	SPEED	2	4	5	6	4	6	8	8	6	6	5	4	4	4	3	3
	INCLINE	5	6	6	6	8	8	4	4	4	5	5	8	10	8	6	3
P91	SPEED	2	5	8	10	1	10	7	7	10	10	6	6	5	5	4	3
	INCLINE	4	5	3	2	2	2	2	2	2	4	5	6	5	5	2	0
P92	SPEED	3	4	9	9	5	8	5	9	7	5	5	7	5	7	6	3
	INCLINE	1	2	3	2	5	0	0	2	3	5	7	3	6	5	3	3
P93	SPEED	3	4	9	9	5	8	5	9	7	5	5	7	5	7	6	3
	INCLINE	1	2	3	2	5	0	0	2	3	5	7	3	6	5	3	3
P94	SPEED	2	2	4	5	4	3	2	1	2	3	4	5	4	3	2	1
	INCLINE	1	1	1	1	1	1	1	1	1	1	1	1	1	1	1	1
P95	SPEED	2	4	6	8	4	4	2	2	2	4	6	8	4	4	2	2
	INCLINE	1	1	1	1	1	1	1	1	1	1	1	1	1	1	1	1
P96	SPEED	2	4	6	8	6	4	2	2	2	4	6	8	4	4	2	2
	INCLINE	5	5	5	6	4	4	6	6	5	5	8	8	9	7	4	2
P97	SPEED	2	2	6	6	6	6	2	2	2	2	6	6	6	6	2	2
	INCLINE	4	5	5	5	6	7	8	9	9	9	10	10	12	8	6	3
P98	SPEED	2	3	4	5	4	5	3	2	2	3	4	5	4	5	3	2
	INCLINE	4	4	4	4	6	6	6	7	7	8	8	9	6	5	3	3
P99	SPEED	2	4	6	2	2	4	6	2	2	4	6	2	2	4	6	2
	INCLINE	3	5	5	5	4	3	3	3	3	4	4	4	3	4	3	2

VII. EXERCISE GUIDE

PLEASE NOTE:

Before beginning any exercise program, consult your physician. This is important especially if you are over the age of 45 or individuals with pre-existing health problems.

The pulse sensors are not medical devices. Various factors, including the user's movement, may affect the accuracy of heart rate readings. The pulse sensors are intended only as an exercise aid in determining heart rate trends in general.

Exercising is great way to control your weight, improving your fitness and reduce the effect of aging and stress. The key to success is to make exercise a regular and enjoyable part of your everyday life.

The condition of your heart and lungs and how efficient they are in delivering oxygen via your blood to your muscles is an important factor to your fitness. Your muscles use this oxygen to provide enough energy for daily activity. This is called aerobic activity. When you are fit, your heart will not have to work so hard. It will pump a lot fewer times per minute, reducing the wear and tear of your heart.

So as you can see, the fitter you are, the healthier and greater you will feel.

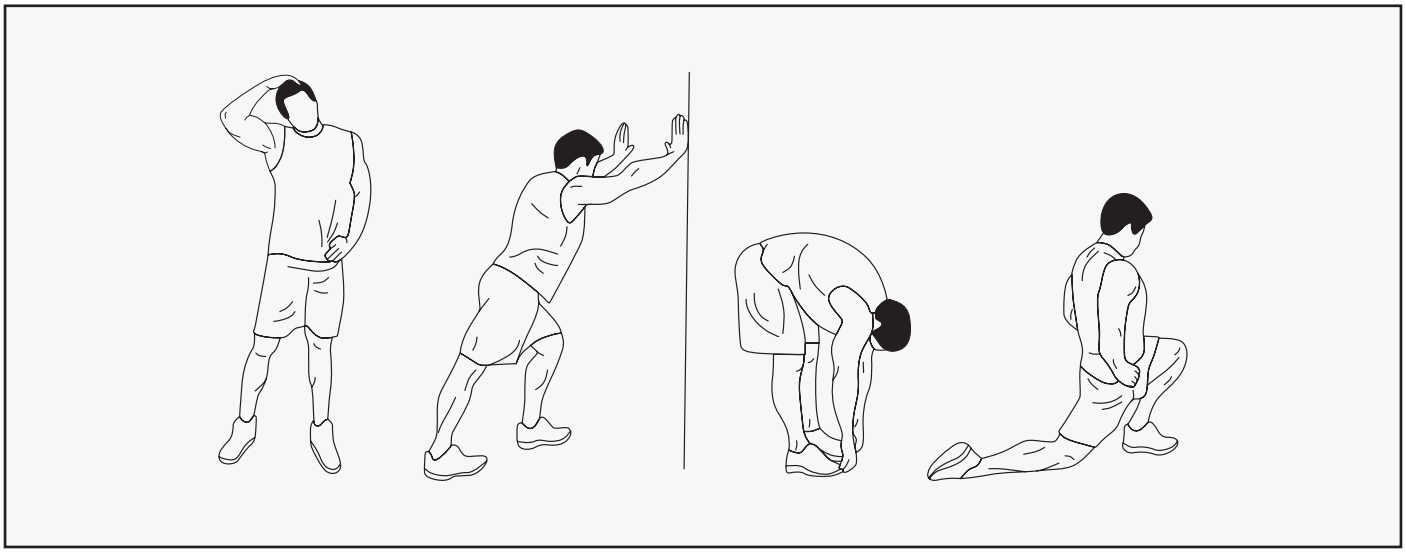

WARM UP

Start each workout with 5 to 10 minutes of stretching and some light exercises. A proper warm-up increases your body temperature, heart rate and circulation in preparation for exercise. Ease into your exercise.

After warming up, increase the intensity to your desired exercise program. Be sure to maintain your intensity for maximum performance. Breathe regularly and deeply as you exercise.

COOL DOWN

Finish each workout with a light jog or walk for at least 1 minute. Then complete 5 to 10 minutes of stretching to cool down. This will increase the flexibility of your muscles and will help prevent post-exercise problems.

WORKOUT GUIDELINES

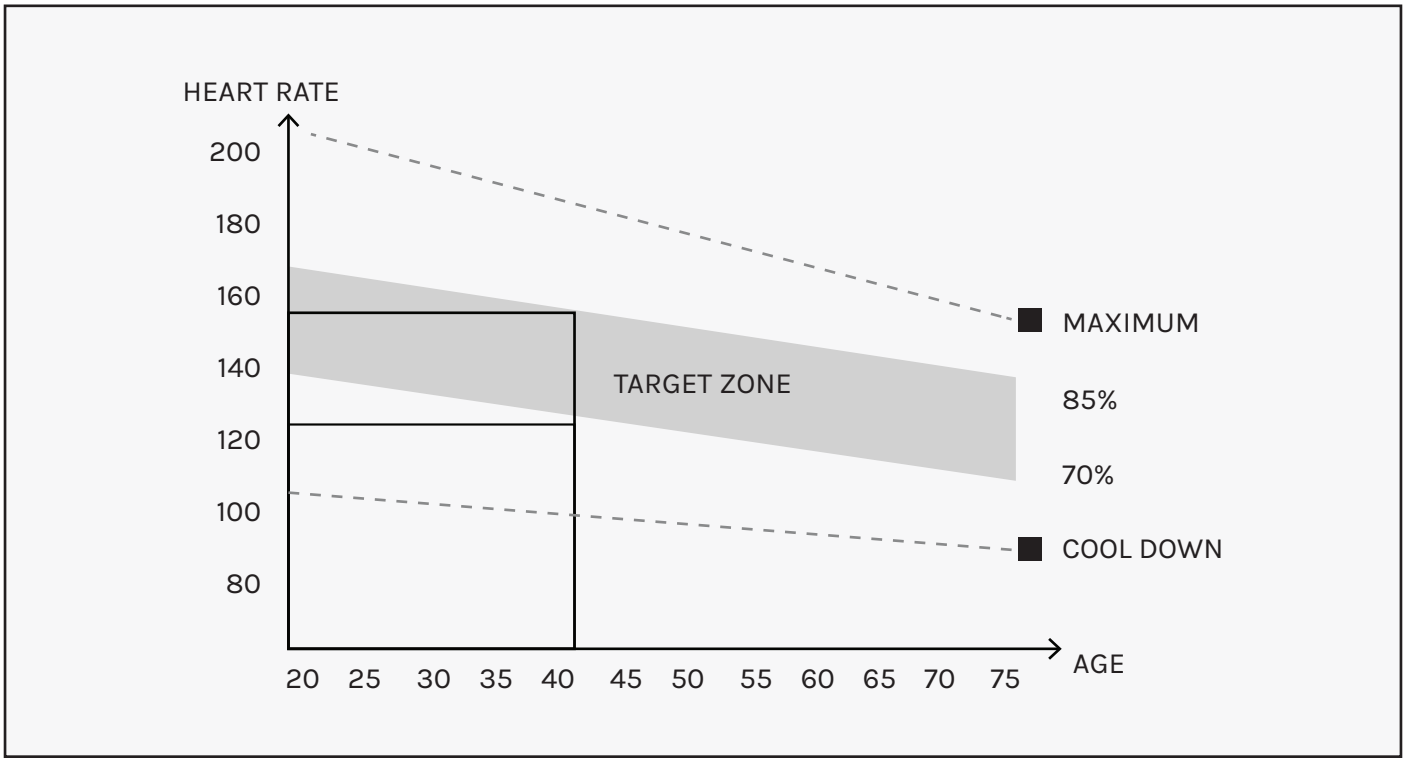

This is how your pulse should behave during general fitness exercise. Remember to warm up and cool down for a few minutes.

The most important factor here is the amount of effort you put in. The harder and longer you work, the more calories you will burn.

VIII. MAINTENANCE INSTRUCTIONS

Reasonable cleaning/lubricating should be made to extend the lifetime of this unit. Performance is maximized when the belt and mat are kept as clean as possible.

⚠ WARNING:

- The mat/deck friction may lay a major role in the function and life of your treadmill and that is why we recommend you constantly lubricate this friction point to prolong the useful life of your treadmill. Failing to do this may void your warranty.
- Unplug power cord before maintenance.
- Stop treadmill before folding.

---

1. GENERAL CLEANING

- Use a soft, damp cloth to wipe the edge of the belt and the area between the belt edge and frame. A mild soap and water solution along with a nylon scrub brush will clean the top of the textured belt. This task should be done once a month. Allow to dry before using.
- On a monthly basis, vacuum underneath your treadmill to prevent dust build up. Once a year, you should remove the black motor shield and vacuum out dirt that may accumulate.

2. GENERAL CARE

- Check parts for wear before use.
- Pay particular attention to the fixing knobs and make sure they are tight.
- Always replace the mat if worn and any other defective parts.
- If in doubt do not use the treadmill and contact us.

! **Take care to protect carpets and floor** in case of leakages. This product is a machine that contains moving parts which have been greased/lubricated and could leak.

3. BELT/DECK/ROLLER LUBRICATION

The mat/deck friction may play a major role in the function and life of your treadmill and that is why we recommend you constantly lubricate this friction point to prolong the useful life of your treadmill. You should apply lubrication after approximately the first 30 hours of operation.

We recommend lubrication of the deck according to the following timetable:

- Light use (less than 3 hours per week) every 6 months.
- Medium use (3-5 hours a week) every 3 months.
- Heavy use (more than 5 hours per week) every 6-8 weeks.

See below procedures for lubricating:

1. Use a soft, dry cloth to wipe the area between the belt and deck.
2. Spread lubricant onto the inside surface of belt and deck evenly (make sure the machine is turned off and power is disconnected).
3. Periodically lubricate the front and rear rollers to keep them at their peak performance. If the treadmill belt/deck/roller is kept reasonably clean it is possible to expect over 1200 hours before relubricating is necessary.

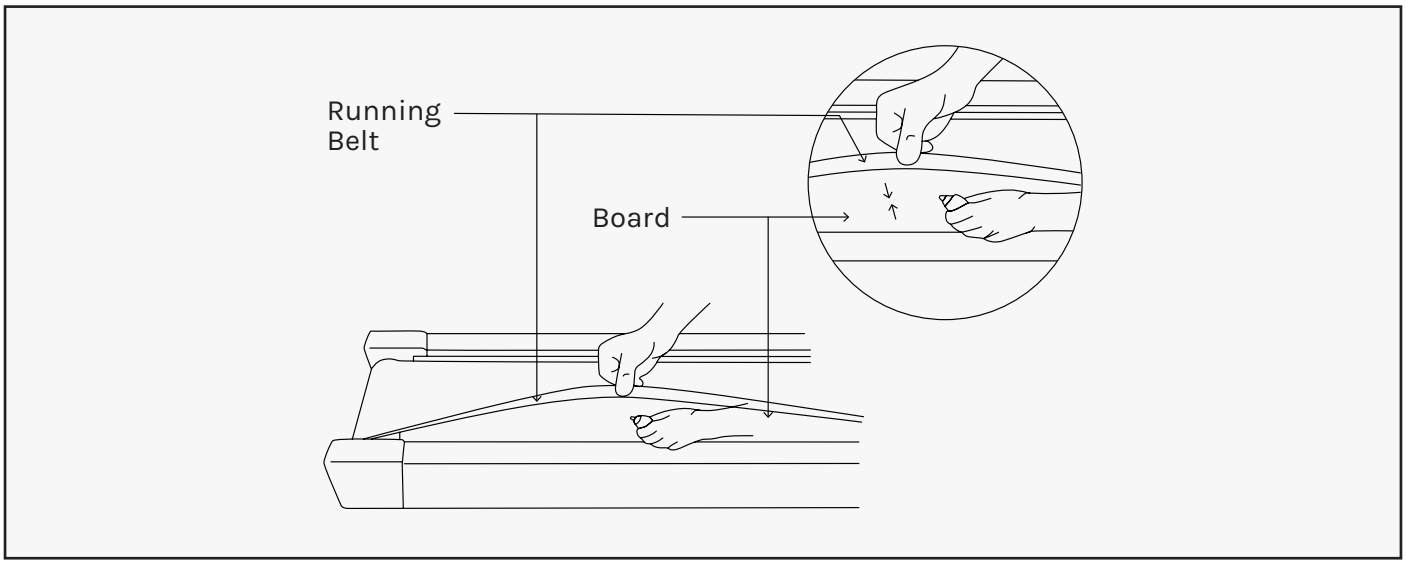

Video Tutorial Available at: **http://youtu.be/cP9NtFHfWlc**
Lifespan Fitness YouTube Channel: **http://www.youtube.com/user/treadmillsvideos**

4. HOW TO CHECK THE RUNNING MAT FOR PROPER LUBRICATION

1. Disconnect the main power supply.
2. Fold the treadmill up into the storage position.
3. Feel the underside surface of the running mat.

If the surface is slick when touched, then no further lubrication is needed.
If the surface is dry to the touch, apply a suitable silicone lubricant.

We recommend that you use a silicone based spray to lubricate your treadmill. This can be purchased directly from us or any hardware store.

Video Tutorial Available at: **http://youtu.be/cP9NtFHfWlc**
Lifespan Fitness YouTube Channel: **http://www.youtube.com/user/treadmillsvideos**

5. ADJUSTING THE RUNNING BELT

Place treadmill on a level surface. Run treadmill at approximately 4km/h, checking the running condition.

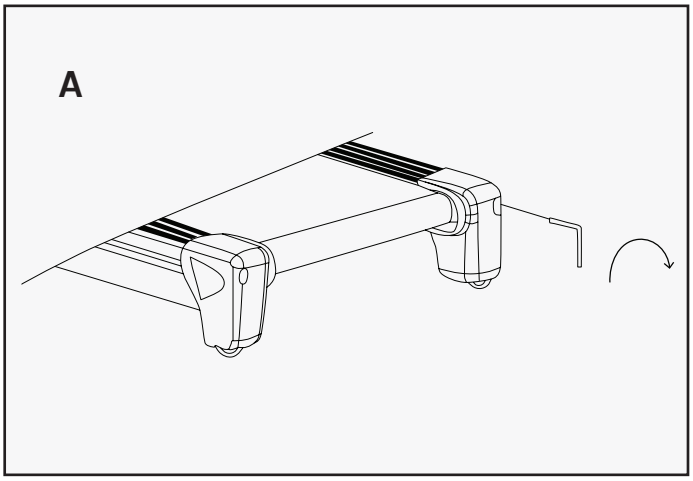

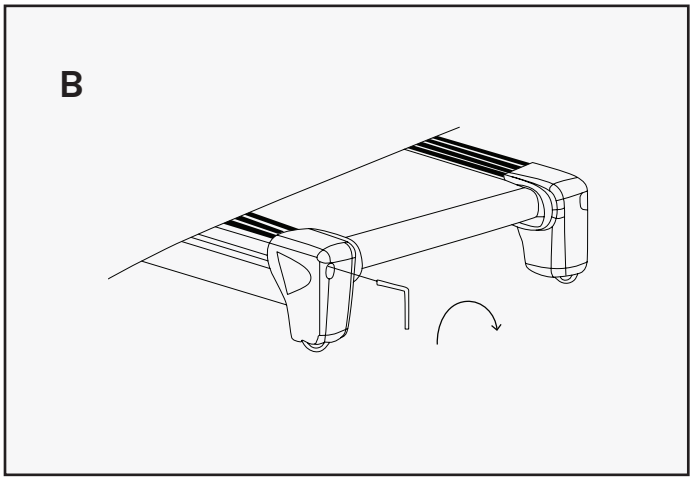

If the belt has drifted to the right: Whilst the treadmill is running at 4km/h, carefully turn the right adjusting bolt 1/4 turn clockwise. Then monitor treadmill until the belt centers. Repeat until the belt correctly centers.

See Picture A

If you have over adjusted the belt and it drifts to the right, carefully turn the right adjusting bolt anticlockwiseuntil the belt centers.

If the belt has drifted to the left: Whilst the treadmill is running at 4km/h, carefully turn the left adjusting bolt 1/4 turn clockwise. Then monitor treadmill until the belt centers. Repeat until the belt correctly centers.

See Picture B

If you have over adjusted it, carefully turn the left adjusting bolt anticlockwiseand until the belt centers.

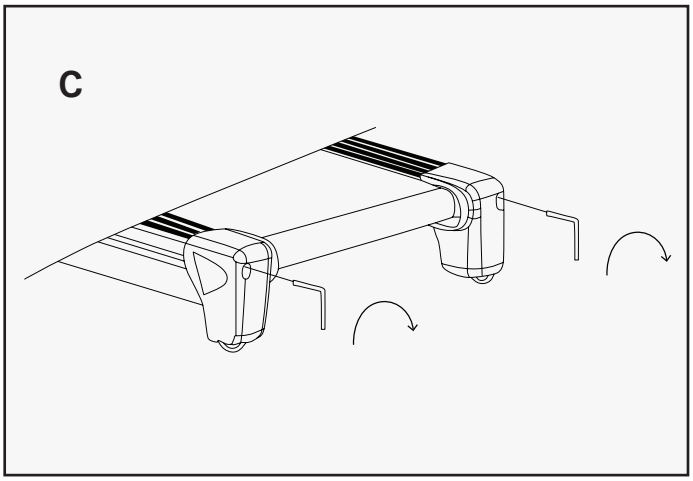

To adjust the tightness of the belt: Turn the treadmill off. Turn both the left and right adjusting bolts 1/4 turn clockwise. Repeat until the belt correctly tightens.

See Picture C

If the belt is over tightened, simply do the opposite to loosen.

NOTE:

When properly tightened,you should be able to peel the very edge of the side of the belt up approximately 2 inches. However, this is a rough reference and not all treadmills are the same. Some treadmills that have longer belts may give different measurements for correct belt tightness.

Simply, if the belt begins to slip during use, this is an indication that the belt still needs tightening.

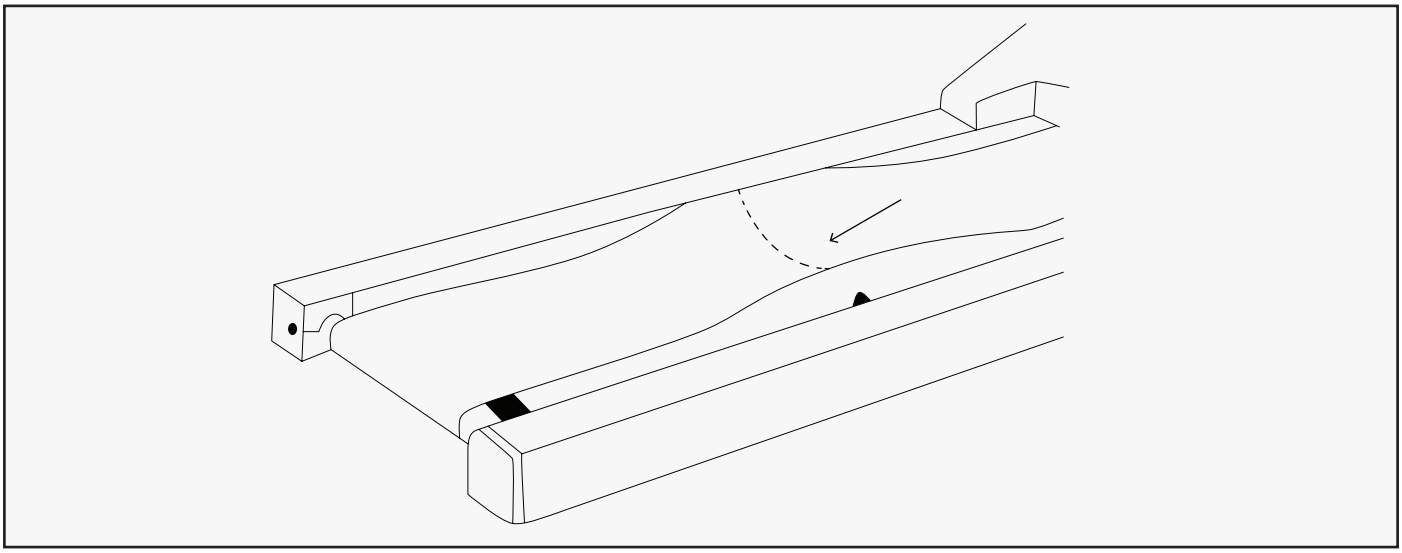

Video Tutorial Available at: **http://youtu.be/vllsamTSvvA**
Lifespan Fitness YouTube Channel: **http://www.youtube.com/user/treadmillsvideos**

IX. EXPLODED DIAGRAM

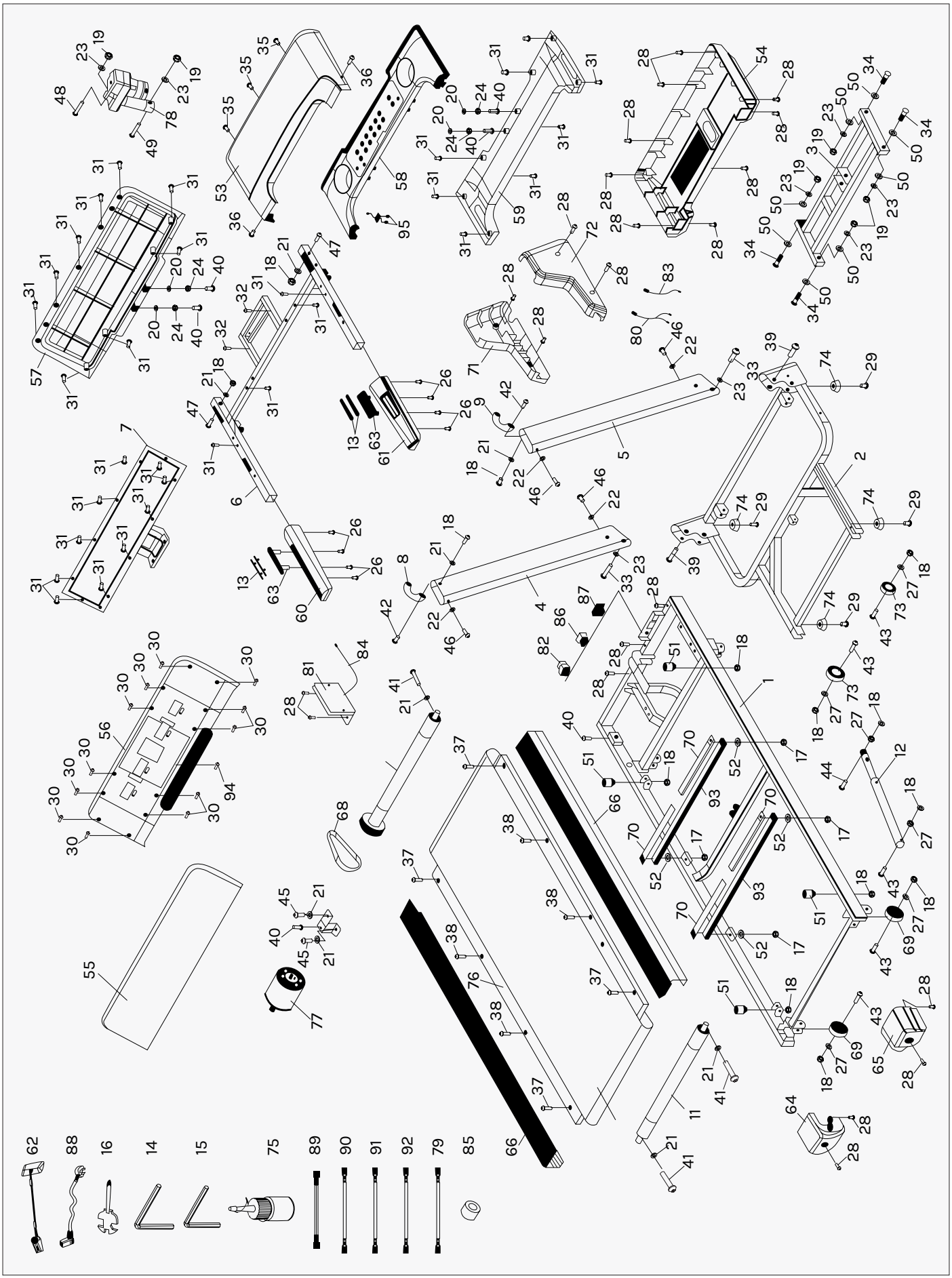

X. PARTS LIST

Some items on this list may come pre-installed on your equipment. If you feel like you're missing anything, please double check your equipment.

No.	Description	Specs	Qty
1	Main frame		1
2	Base frame		1
3	Incline frame		1
4	Left upright		1
5	Right upright		1
6	Computer bracket		1
7	Panel assembly		1
8	Left rotating plate		1
9	Right rotating plate		1
10	Front roller		1
11	Rear roller		1
12	Cylinder		1
13	Pulse metal plate		4
14	5#Allen wrench	5mm	1
15	6#Allen wrench	6mm	1
16	Wrench with screwdriver		1
17	Lock nut	M6	4
18	Lock nut	M8	16
19	Lock nut	M10	6
20	Flat washer	6	4
21	Flat washer	8	9
22	Arc washer	8	4
23	Lock washer	10	8
24	Spring washer	6	4
25	Spring washer	8	2
26	Screw	ST4.2*20	8
27	Lock washer	8	6
28	Screw	ST4.2*20	22
29	Screw	ST4.2*25	4
30	Screw	ST4.2*9	12
31	Screw	ST4.2*20	31
32	Screw	ST4.2*50	2

No.	Description	Specs	Qty
33	Bolt	M10*50	2
34	Bolt	M10*45	4
35	Screw	ST4.2*19	3
36	Screw	ST4.2*30	2
37	Bolt	M8*25	4
38	Bolt	M6*40	4
39	Bolt	M8*45	2
40	Bolt	M6*15	4
41	Bolt	M8*65	3
42	Bolt	M8*40	2
43	Bolt	M8*42	5
44	Bolt	M8*25	1
45	Bolt	M8*35	2
46	Bolt	M8*20	4
47	Bolt	M8*30	2
49	Bolt	M10*55	1
50	Distance sleeve		8
51	Cushion		4
52	Isolation nylon pad		4
53	Motor up cover		1
54	Motor bottom cover		1
55	Panel cover		1
56	Panel top cover		1
57	Panel bottom cover		1
58	Computer top cover		1
59	Computer bottom cover		1
60	Left hand bar		1
61	Right hand bar		1
62	Safety key		1
63	Pulse insert		2
64	Left back end cap		1
65	Right back end cap		1

No.	Description	Specs	Qty
66	Side rail		2
67	Running belt		1
68	Motor belt		1
69	Moving wheel		2
70	Strengthening Tube cushion		4
71	Left base cover		1
72	Right base cover		1
73	Transport wheel		2
74	Foot Pad		4
75	Oil bottle		1
76	Running board		1
77	DC motor		1
78	Incline motor		1
79	Single wire		1
80	Pulse wire		2

No.	Description	Specs	Qty
81	Control board		1
82	Overload protector		1
83	Computer top wire		1
84	Computer bottom wire		1
85	Magnetic ring		1
86	Switch		1
87	Power socket		1
88	Power wire		1
89	Grounding wire		1
90	AC Single wire	120mm	2
91	AC Single wire	450mm	1
92	Blue Single wire		1
93	Running board strengthen tube		2
94	Screw		1
95	Screw		2

XI. TROUBLESHOOTING

CODE	REASON	SOLUTION
E02	The controller detects that the motor load current is maintained at the maximum set value for 3 consecutive seconds.	Check whether there is something blocking the motor, reduce the load of running belt or let the running belt run empty to see if the display returns E1 error, and replace the motor or controller.
E02	Controller detects Abnormal Hall Signal of Motor	Check whether the motor hall wire is inserted tightly or loosened, confirm that the motor hall wire is no problem, report E2 error or computer, and replace the motor or controller.
E03	The controller detects that that current of the motor instantly exceeds a safe value	Check whether the motor cable is plugged tightly and whether there is abnormal sound in the motor. Make sure that there is no problem. See if the computer turns E3 error. If there is still a replacement motor or controller.
E04	The controller detected that the motor line was not plugged in for about 3 seconds.	Check whether the motor line is plugged tightly and plug and unplug the motor phase line once again after power failure. Make sure that there is no problem. See if the electronic watch returns E4 error. If there is still a replacement motor or controller.
E05	Driver detected low power input threshold	Check that the input power supply is lower than the AC160V. If the input power supply is OK, replace the drive if the electronic meter or the report E5.
E06	Driver detected high power input threshold	Check that the input power supply is higher than the AC260V. If the input power supply is OK, replace the drive if the electronic meter or the report E6.
E08	The controller has detected an abnormality in its own circuit.	Contact the seller to change the controller.
E16	The controller has detected that the AD value of the lifting motor is abnormal during adjustment.	Check whether the feedback signal wire of the lifting motor is plugged tightly or falls off or recalibrate the lifting motor with a computer. If the electronic watch still reports E16 error, please replace the lifting motor or controller.

E17	The controller detected that the AD value of the lifting motor was abnormal during calibration.	Check whether the feedback signal wire of the lifting motor is plugged tightly or falls off or recalibrate the lifting motor with an electronic watch. If the computer still reports E17 error, please replace the lifting motor or controller.
E21	The controller failed to receive data for the above computer	Please contact the manufacturer to change the controller.
E31	The controller has detected that its temperature has reached the safety setting value.	Check whether the fan on the controller is turned on or not, check whether the treadmill is overloaded for a long time, allow the treadmill to cool to room temperature before starting to see if the electronic watch returns E31, and replace the controller if there is any error.
E32	The controller detected that the motor was running in the opposite direction for more than one week.	Check whether there is anything that forcibly makes the motor rotate in the opposite direction, check whether the motor is installed normally, make sure that there is no problem, and see whether the electronic watch returns E32 error, and if there is any replacement of the motor or controller.
E33	Controller detect the motor setting unreasonable	Please contact the manufacturer to change the controller.
E50	Other Error	Contact the seller to change the controller.
E91	1. Message wire is broken or not connected well	Check if the computer and bottom control board wire connect well.
	Incline Not Working	Remove the safety key and press incline+ and incline- for 3 seconds simultaneously. After switching to the incline learning interface, press the start button to finish the learning and return to the standby interface automatically.

XII. WARRANTY

AUSTRALIAN CONSUMER LAW

Many of our products come with a guarantee or warranty from the manufacturer. In addition, they come with guarantees that cannot be excluded under the Australian Consumer Law. You are entitled to a replacement or refund for a major failure and compensation for any other reasonably foreseeable loss or damage.

You are entitled to have the goods repaired or replaced if the goods fail to be of acceptable quality and the failure does not amount to a major failure. Full details of your consumer rights may be found at **www.consumerlaw.gov.au**.

Please visit our website to view our full warranty terms and conditions:
http://www.lifespanfitness.com.au/warranty-repairs

WARRANTY AND SUPPORT

Please email us at **support@lifespanfitness.com.au** for all warranty or support issues.

For all warranty or support related enquiries, please lodge a support ticket first by sending us an email.

XIII. SECURITY SUPPORT INFO

REPORTING

To report a cyber security issue, please email **support@gflgroup.com.au** with product details and a description of the issue.

We will acknowledge receipt and provide updates as it is investigated.

DEVICE SUPPORT PERIOD

This product will receive security updates for a minimum of 12 months from the date of purchase.

XIV. HAND PULSE TECHNOLOGY

This product comes equipped with hand pulse sensors which are used to pick up tiny EKG/ECG signals that run through the body when your heart beats. These electrical EKG/ECG signals are very small and that they must be amplified 1000 times to make the signal useful for the computer to display your pulse.

To ensure proper operation:

- The user must maintain good, consistent contact on all four sensors.
- The users skin cannot be too dry or too wet.

Other factors that could affect the reading:

- Change of grip on the sensors (during slow pace walking and up to running).
- Tightening of hand muscles will produce small electrical signal.
- Static electricity charges from the air or from walking on the treadmill.

EKG/ECG Sensors may filter through actual EKG/ECG signals and "Noise" factors that may affect the reading. This will cause the pulse reading to be delayed and will take longer to update the display as the heart rate changes. Too much noise will create an incorrect reading. Medical conditions or having no electrical signal in the hands are other factors that may affect pulse readings as well.

These are limitations of hand pulse technology and even the most expensive systems (which can cost upwards of $3,000) used in hospitals have the same problems. The difference is that a patient in a hospital is not running on a treadmill. Hand pulse technology works well on stationary exercise machines like bikes and even elliptical cross trainers but are not perfect on a treadmill. We offer treadmills with a wireless heart rate receiver which may be a more accurate option.

To test if your hand pulse sensors are working up to specification, hold them while standing on the sidestep rails, not walking, and see if the reading is more in line with what you would expect. This will eliminate the movement and static electricity factors. If your hands are dry, then wet them slightly (saliva works as a great conductor if this doesn’t bother you).

For more information, please contact our Lifespan Fitness Technical Support Department
www.lsgfitness.com.au
support@lsgfitness.com.au

LSG

WWW.LSGFITNESS.COM.AU